CHAIN PULLEY BLOCK - SILVER

- **Compact & Light weight**: Designed for portability and ease of handling.
- **All major Forging, Casting, Gears components and Chains produced in house:** Assured quality and reliability.
- **Spur Alloy steel gears with case hardening:** Precision cut spur gears ensure smooth and efficient operation with minimal effort.
- **Fully pocketed S. G. Iron casting load chain wheel mounted on double ball bearing, Zinc Plated:** Ensures accurate and smooth operation.
- **Hand chain wheel cover**: Minimizes jamming & slipping.
- **Alloy Steel Load Chain**: Provides added strength, wear resistance, longer chain life.
- **Brakes:** Mechanical screw friction self actuating disc load brake engages instantly for load holding. Two Ratchet Pawls for extra safety.
- **Hand chain:** Galvanized chain. Offers better aesthetic looks, increased rust protection and longer chain life.
- **Load and suspension hook with Safety Latches:** Prevents unintentional unhooking of load.
- **Machined Guide rollers, Zinc Plated**: Ensure smooth running of load chain.
- **Powder Coated finish:** For added rust protection and better aesthetic look.
- **Easy to maintain**: Chain block can be easily dismantled for maintenance with simple tools available in workshop.
- **Over Load Test:** Chain block tested for 150% of SWL as per IS 3832.

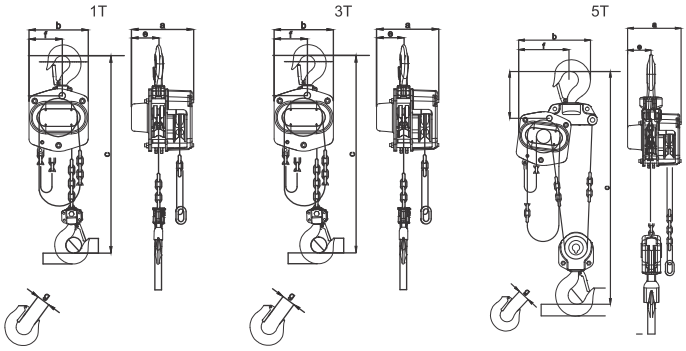

CAPACITY(T)	1T (S/F)	2T (S/F)	3T (S/F)	2T (D/F)	3T (D/F)	5T (D/F)	7.5T (T/F)	10T (F/F)
NO.OF FALLS	1	1	1	2	2	2	3	4
MODEL CODE	LL010-060	LL020-080	LL030-100	LLD020-060	LLD030-071	LLD050-090	LLT075-090	LLF100-090
EFFORT(KG)	30	36	34	33	37	37	38	39
LOAD CHAIN SIZES	6mm	8mm	10mm	6mm	7.1mm	9mm	9mm	9mm
HANDCHAIN SIZES	5mm	5mm	6mm	5mm	5mm	6mm	6mm	6mm
Weight at 3MTR lift (approx)KG	13	20	32	18	24	42	74	88
Extra weight per additional metre lift (kgs.)	1.8	2.4	3.5	2.6	3.16	4.8	6.5	8.2

CAPACITY(T)	a(mm)	b(mm)	c(mm)	e(mm)	f(mm)	g(mm)
1T (S/F)	161	157	346	72	96	28
2T (S/F)	180	196	510	94	112	44
3T (S/F)	189	228	423	100	131	48
2T (D/F)	160	182	475	75	144	44
3T (D/F)	160	182	515	80	148	48
5T (D/F)	190	225	605	95	182	60
7.5T (T/F)	190	410	770	121	318	75
10T (F/F)	190	430	765	115	318	80.5