GAURAV BRASCO JOY

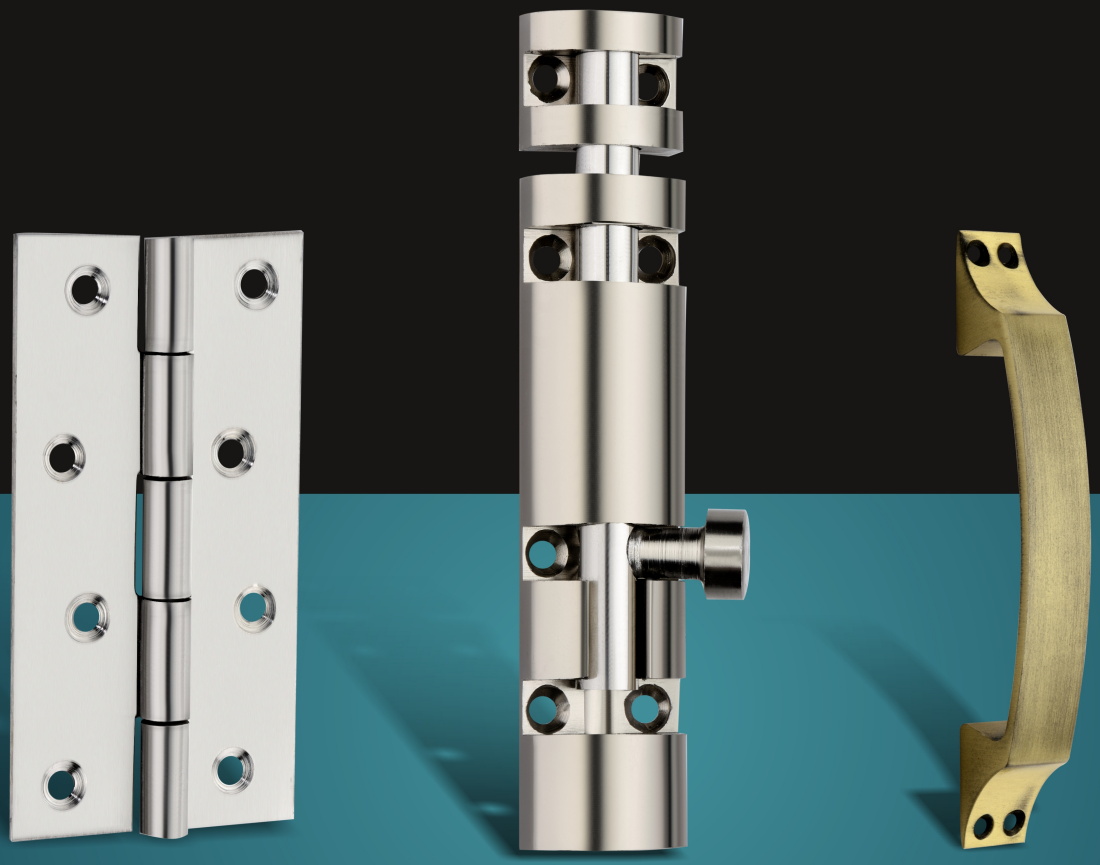

2021 ARCHITECTURAL HARDWARE

Product Catalogue

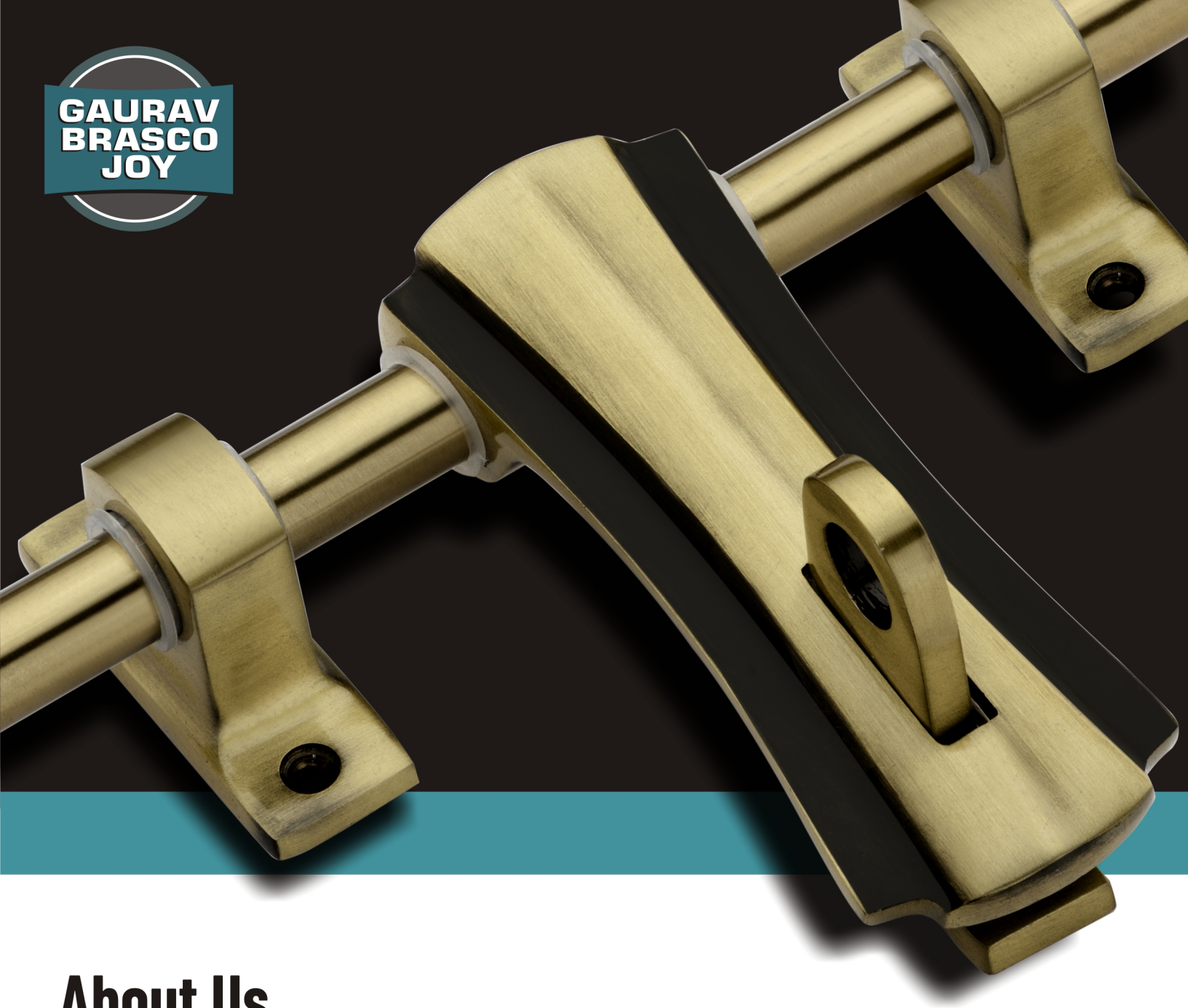

About Us...

We at PARKASH TRADERS INDIA are amongst the leading firms in manufacturing a wide range of door & window hardware fittings and accessories in brands **GAURAV, BRASCO & JOY**

We are dedicated to giving you outstanding product with a focus on dependability, customer service & uniqueness

Founded in year 1957, we now serve customers all over india & also export abroad. With quality product & quick response service, we hope you enjoy our product as much as we enjoy offering them to you.

GAURAV BRASCO JOY

Aluminium
Tower Bolts

HALF ROUND

Material	Al. Section SS Rod/Al. Rod
Size	4" to 36"
Finish	Ant., SS., Satin IC, Gold, CHP

REGAL

Material	Al. Section SS Rod
Size	4" to 36"
Finish	Ant., SS. Satin, IC

ROYAL

Material	Al. Section SS Rod
Size	4" to 36"
Finish	Ant., SS. Satin, IC

CROWN

Material	Al. Section SS Rod
Size	4" to 36"
Finish	Ant., SS. Satin, IC

SQUARE

Material	Al. Section Al. Rod
Size	4" to 24"
Section	9.5mm, 10mm, 12mm
Weight	Light, Medium, Heavy
Finish	Ant., SS., Satin, IC, CHP Matt, Bright, PC, Golden

XYLO

Material	Al. Section SS Rod
Size	4" to 36"
Finish	Ant., SS. Satin, IC

PYRAMID

Material	Al. Section SS Rod
Size	4" to 24"
Finish	Ant., SS. Satin, IC

MANDIR

Material	Al. Section Al. Rod
Size	4" to 8"
Finish	SS., Gold, Bright Matt, CHP, PC

PLAIN

Material	Al. Section Al. Rod
Size	4" to 24"
Section	9.5mm, 10mm, 12mm
Rod	1pc, 2pc
Weight	Light, Medium, Heavy
Finish	Ant., SS., Satin, IC, CHP Matt, Bright, PC, Golden

Aluminium

Handles

C-TYPE
Size | 4", 5", 6"

D-TYPE
Size | 4", 5", 6"

HALF ROUND
Size | 5", 6"

SQUARE
Size | 4", 5", 6"

XYLO
Size | 5", 6"

NEXA
Size | 6" to 12"

Finish: SS, IC, Antique, Satin, Golden, CHP, Bright, Matt, PC

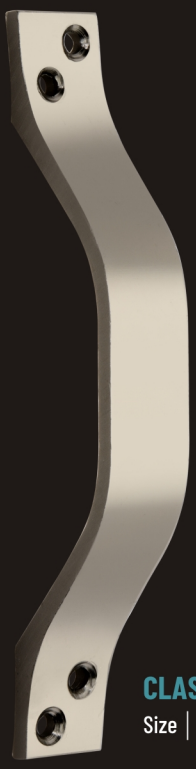

CLASSIC
Size | 5", 6"

3-LINE
Size | 6" to 12"

NAKSEEN
Size | 6" to 12"

GANESH JI
Size | 6" to 12"

SLEEK
Size | 6" to 12"

OVAL
Size | 6" to 12"

Aluminium

Aldrop

SLEEK

Size	6" to 12"
Finish	Antique, Satin

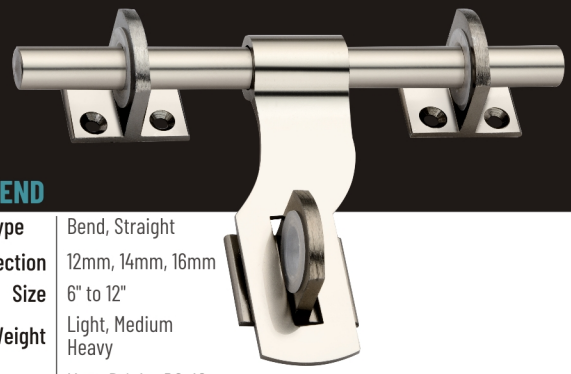

BEND

Type	Bend, Straight
Section	12mm, 14mm, 16mm
Size	6" to 12"
Weight	Light, Medium Heavy
Finish	Matt, Bright, PC, IC SS, Gold, CHP, Antique

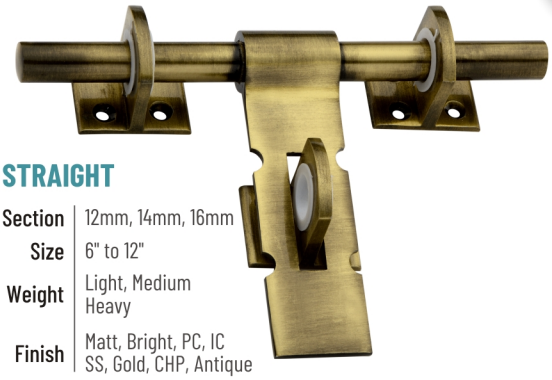

STRAIGHT

Section	12mm, 14mm, 16mm
Size	6" to 12"
Weight	Light, Medium Heavy
Finish	Matt, Bright, PC, IC SS, Gold, CHP, Antique

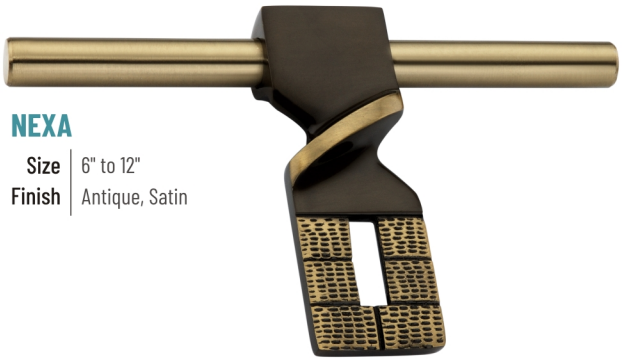

NEXA

Size	6" to 12"
Finish	Antique, Satin

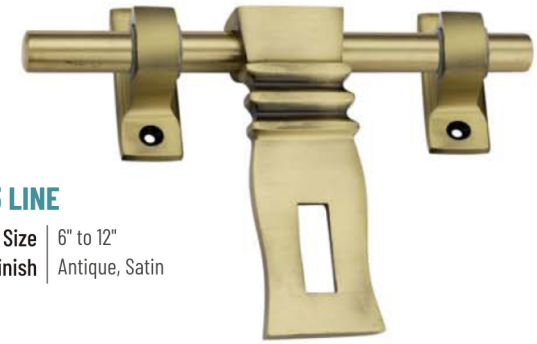

3 LINE

Size	6" to 12"
Finish	Antique, Satin

OVAL

Size	6" to 12"
Finish	Antique, Satin

NAKSEEN

Size	6" to 12"
Finish	Antique, Satin

GANESH JI

Size	6" to 12"
Finish	Antique, Satin

HALF ROUND DOOR STOPPER

Finish	SS
Type	Al. Section, SS Rod

DOOR STOPPER

Finish	SS, Gold, CHP, Bright, Matt, PC
Type	Al. Section, Al. Rod

BULLET APPLE ROYAL

Finish	Antique, SS, IC, Satin

GH-001 (GATE HOOK)

Size	5", 6"
Finish	SS, Golden, CHP, Bright, Matt PC, IC, Antique, Satin
Section	Heavy, Light

VENTILATOR CATCHER

Finish	SS, Gold, Bright, Matt

BABY LATCH

Finish	SS, Gold, Bright, Matt

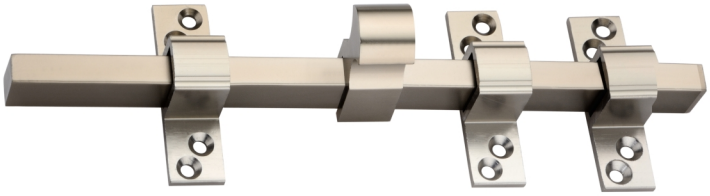

FLAT LATCH

Size	8", 10" 12"
Finish	SS, Gold, Bright, Matt, PC
Section	Heavy, Light

WINDOW STAY

Finish	SS, Gold

Stainless Steel

Mortice Handles

4002 - AURA

4003 - CUBIC

4004 - COURTYARD

5002 -BREEZE

5001 - SUNRISE

5003 - WIND

4001 - GLOBE

6001 - DUAL CURVE

6002 - ROUNDED

MS HINGE

Size | 2", 2.5", 3", 4", 5", 6"
Finish | PC, Plain, Zinc, EB

CONCRETE HINGE

Size | 3", 4"
Metal | SS, MS

SS WELDED HINGE

Size | 3", 4", 5", 6"

SS PREMIUM HINGE

Size | 3", 4", 5", 6"

SS ORDINARY (ISI) HINGE

Size | 2", 3", 4", 5", 6"

LORRY HINGE

Size | 1 1/2", 2", 2 1/2"
Type | Heavy, Light

L HINGE

Size | 6mm, 13mm, 19mm

TEE HINGE

Size | 6" - 20"
Metal | SS, MS

PARLIAMENT HINGE

Size | 2" - 8"
Metal | SS, MS

PIANO HINGE

Finish | **MS:** Nickel, PC Chrome, Plain, Zinc
SS: Heavy, Light

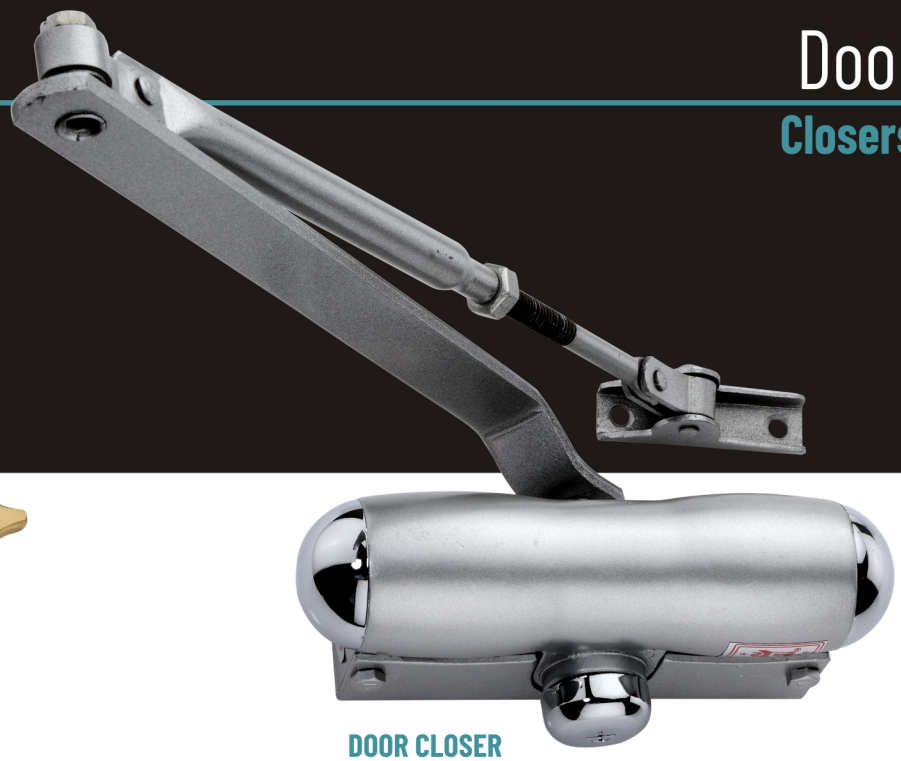

HELICAL DOOR SPRING

Model	Standard, Mini, Arrow
Finish	Golden, Brown

DOOR CLOSER

Model	Kapsa, Kroma, Trax Niko, Klacik, Jad
Finish	SS, Golden, Brown

FLOOR SPRING

Type	Big, Small

HELIX CLOSER

PNEUMATIC DOOR CLOSER

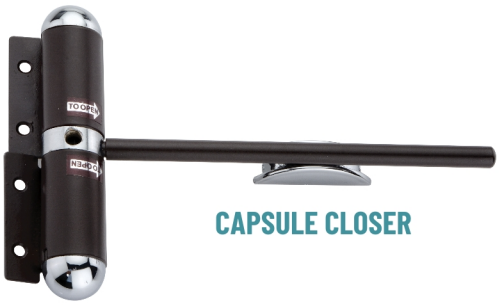

CAPSULE CLOSER

COIL SPRING

Hinges

DOUBLE ACTION HINGES

Size	4", 5"
Finish	Golden, Brown, SS

SINGLE ACTION HINGES

Size	4", 5"
Finish	Golden, Brown, SS

TELESCOPIC CHANNEL

Metal	SS, MS
Weight	45g, 60g, 75g
Type	Normal, Push Open, Soft Close

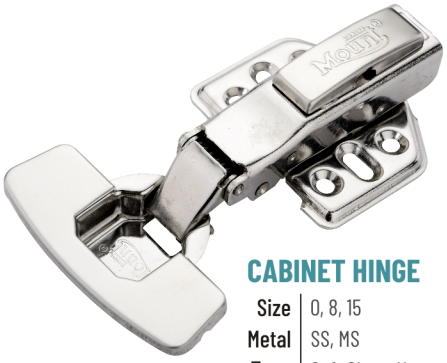

CABINET HINGE

Size	0, 8, 15
Metal	SS, MS
Type	Soft Close, Normal, 3D

TUBULAR LOCK

WHEEL CASTOR

Type	Single, Double 4 Wheel, 6 Wheel

CURTAIN WIRE

Type	15m, 23, 30m

GLASS RUNNER

Type	Single Wheel, Double Wheel
Finish	SS, Teak, Brown

DOOR SEAL

Size	2 1/2, 3, 3 3/4, 3 1/2, 4
Finish	Brown, Ivory
Type	Brush, Rubber

SCREWS

DOOR HOLDER

Finish	Brown, Ivory

MAGNET CATCHER

Power	M5, M7, M10, M15

DOOR BUFFER

Finish	Brown, Ivory

GITTI/NYLON WALL PLUGS

Size	1", 1 1/2", 2"

JAZZ
Section | 14mm, 16mm
Finish | Two Tone

SLIDE
Section | 12mm, 14mm, 16mm
Finish | Two Tone

TOWER BOLT
Section | 10mm, 12mm
Rod | 1pc, 2pcs
Finish | Two Tone, Full Matt

SS DOOR STOPPER

SLIDER
Size | 4", 5", 6"

D-TYPE
Size | 4", 5", 6"

JAZZ
Size | 4", 5", 6"

Parkash Traders
India

523, Kucha Pati Ram
Bazar Sita Ram
New Delhi - INDIA
parkashtradersindia@gmail.com

Desi. By Creative Eye. #9997356666