SWIFT INDUSTRIAL CORPORATION

LEVELING CASTORS CATALOGUE

PANEL LOCKS, LATCHES, CANOPY LOCKS, HINGES, I.P. AIR VENTS
ALUMINIUM SECTIONS & ACCESSORIES, TOGGLE CLAMPS, CASTOR WHEELS

STD. M/C ELEMENTS - HANDLES, HANDWHEELS, KNOBS, CLAMPING LEVERS,
POSITION COUNTERS, UNIVERSAL JOINTS, PLUNGERS, LEVELLING ELEMENTS

HEAD OFFICE:
S.NO 34, BHUMKAR ESTATE, AT ZEAL COLLEGE CHOWK, NARHE, TALUKA HAVELI, PUNE-411041
TEL NO: 020-24607050/51 EMAIL: info@swiftindustrial.in

BRANCH:
SHOP NO. 2, PLOT NO. T-165/1/5, PRIYADARSHANI SOC., NEXT TO GUJJAR (BHARAT GAS) AGENCY, T-BLOCK, MIDC, BHOSARI, PUNE-26
TEL NO: 020-27121290 EMAIL: pcmc@swiftindustrial.in

JDF–40F

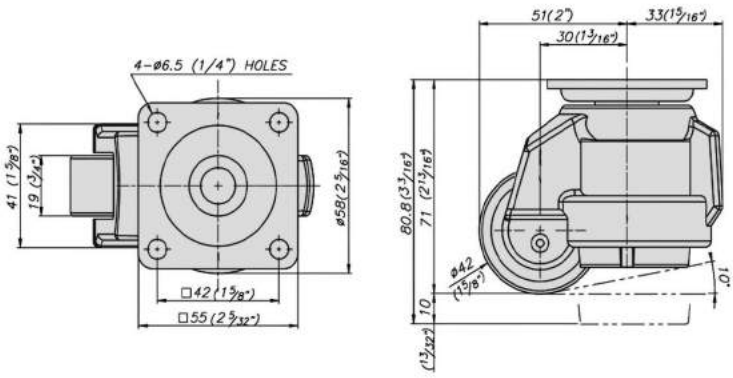

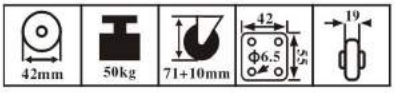

PRODUCT DESCRIPTION

① top plate : Pressed steel plate
② frame : Al die–casting frame
③ handle : ABS resin handle
④ leveling pad : NBR resin cushion
⑤ wheel : PC+GF resin wheel
⑥ finish : powder coated&zinc galvanized

SELECT ITEMS

Variety of cushion available
Black finish is available

SPEC (℃/mm/kg)

Wheel Diameter	42 mm
Width of Tread	20 mm
Hardness of Tread	70S hore D
Size of Plate	55 × 55 mm
Plate Hole Centers	42 × 42 mm
Plate Hole	6.5 mm
Leveling Extent	10 mm
Offset	30 mm
Overall Height	71 mm
Load Capacity / 1pcs	50 kg
Load Capacity / 4pcs	100 kg

JDF–40S

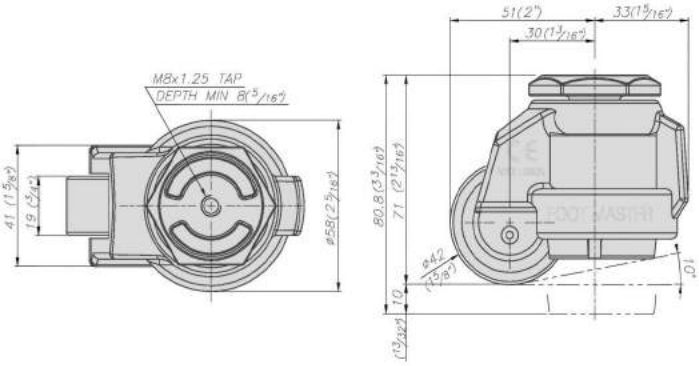

PRODUCT DESCRIPTION

① top plate : pressed steel plate
② frame : al diecasted
③ handle : ABS resin handle
④ leveling pad : NBR resin cushion
⑤ wheel : nylon6
⑥ finish :
powder coated&zinc galvanized

SELECT ITEMS

Variety of cushion available
Black finish is available

规格 SPEC (℃/mm/kg)

Wheel Diameter	42 mm
Width of Tread	20 mm
Hardness of Tread	70 Shore D
Center Bolt	m8
Bolt Length	35 mm
Leveling Extent	10 mm
Offset	30 mm
Overall Height	71 mm
Load Capacity / 1pcs	50 kg
Load Capacity / 4pcs	100 kg

JDF-60F

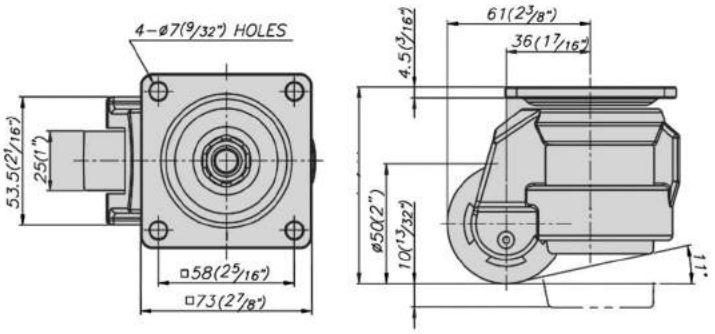

产品说明 PRODUCT DESCRIPTION

① 脚轮座(top plate)：碳钢冲压(pressed steel plate)
② 脚轮壳(frame)：铝制(al diecasted)
③ 手把(handle)：ABS resin handle
④ 底座(leveling pad)：NBR resin cushion
⑤ 轮子(wheel)：尼龙6(nylon6)
⑥ 表面处理(finish)：喷涂&镀锌
powder coated&zinc galvanized

选择事项 SELECT ITEMS

▶防静电底座 Variety of cushion available
▶防静电聚氨酯轮子 Antistatic polyurethane wheels
▶黑色脚轮壳 Black finish is available

规格 SPEC （℃/mm/kg）

Wheel Diameter	50 mm
Width of Tread	25 mm
Hardness of Tread	70 S hore D
Size of Plate	73×73 mm
Plate Hole Centers	58×58 mm
Plate Hole	7 or 8.5 mm
Leveling Extent	10 mm
Offset	36 mm
Overall Height	82 mm
Load Capacity / 1pcs	250 kg
Load Capacity / 4pcs	500 kg

JDF-60S

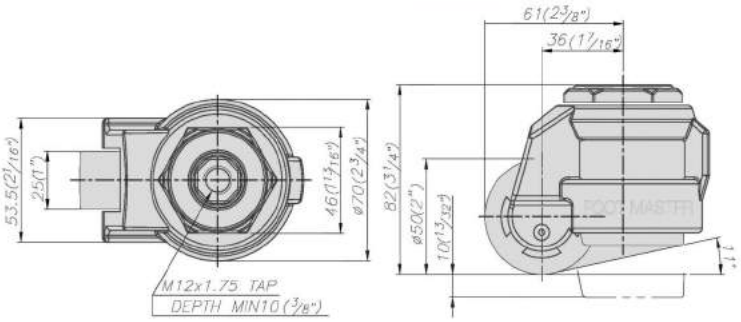

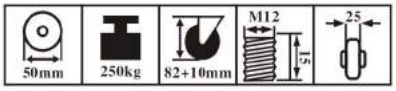

产品说明 PRODUCT DESCRIPTION

① 脚轮座(top plate)：碳钢冲压(pressed steel plate)
② 脚轮壳(frame)：铝制(al diecasted)
③ 手把(handle)：ABS resin handle
④ 底座(leveling pad)：NBR resin cushion
⑤ 轮子(wheel)：尼龙6(nylon6)
⑥ 表面处理(finish)：喷涂&镀锌
powder coated&zinc galvanized

选择事项 SELECT ITEMS

▶防静电底座 Variety of cushion available
▶防静电聚氨酯轮子 Antistatic polyurethane wheels
▶黑色脚轮壳 Black finish is available

规格 SPEC （℃/mm/kg）

Wheel Diameter	50 mm
Width of Tread	25 mm
Hardness of Tread	70 Shore D
Center Bolt	m12
Bolt Length	35 mm
Leveling Extent	10 mm
Offset	36 mm
Overall Height	82 mm
Load Capacity / 1pcs	250 kg
Load Capacity / 4pcs	500 kg

JDF–80F

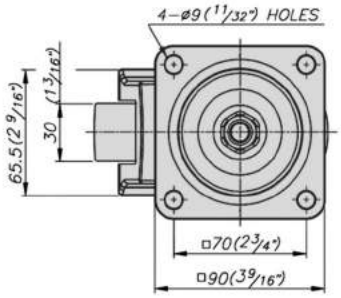

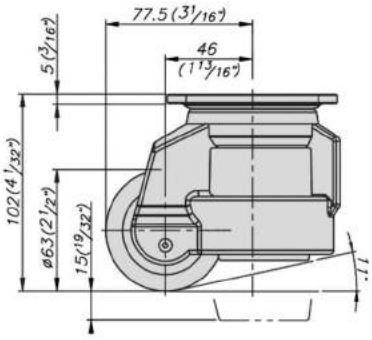

产品说明 PRODUCT DESCRIPTION

① 脚轮座(top plate)：碳钢冲压(pressed steel plate)
② 脚轮壳(frame)：铝制(al diecasted)
③ 手把(handle)：ABS resin handle
④ 底座(leveling pad)：NBR resin cushion
⑤ 轮子(wheel)：尼龙6(nylon6)
⑥ 表面处理(finish)：喷涂&镀锌
powder coated&zinc galvanized

选择事项 SELECT ITEMS

▶ 防静电底座 Variety of cushion available
▶ 防静电聚氨酯轮子 Antistatic polyurethane wheels
▶ 黑色脚轮壳 Black finish is available

规格 SPEC （℃/mm/kg）

Wheel Diameter	63 mm
Width of Tread	30 mm
Hardness of Tread	70S hore D
Size of Plate	90 × 90 mm
Plate Hole Centers	70 × 70 mm
Plate Hole	9 mm
Leveling Extent	15 mm
Offset	46 mm
Overall Height	103 mm
Load Capacity / 1pcs	500 kg
Load Capacity / 4pcs	1000 kg

JDF–80S

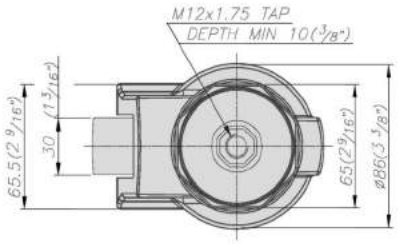

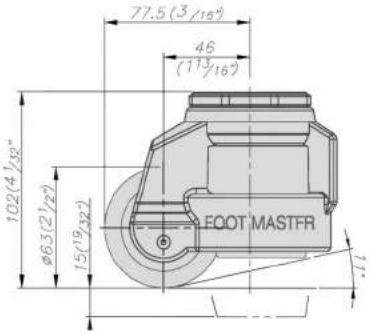

产品说明 PRODUCT DESCRIPTION

① 脚轮座(top plate)：碳钢冲压(pressed steel plate)
② 脚轮壳(frame)：铝制(al diecasted)
③ 手把(handle)：ABS resin handle
④ 底座(leveling pad)：NBR resin cushion
⑤ 轮子(wheel)：尼龙6(nylon6)
⑥ 表面处理(finish)：喷涂&镀锌
powder coated&zinc galvanized

选择事项 SELECT ITEMS

▶ 防静电底座 Variety of cushion available
▶ 防静电聚氨酯轮子 Antistatic polyurethane wheels
▶ 黑色脚轮壳 Black finish is available

规格 SPEC （℃/mm/kg）

Wheel Diameter	63 mm
Width of Tread	30 mm
Hardness of Tread	70 Shore D
Center Bolt	m12
Bolt Length	35 mm
Leveling Extent	15 mm
Offset	46 mm
Overall Height	103 mm
Load Capacity / 1pcs	500 kg
Load Capacity / 4pcs	1000 kg

JDF–100F

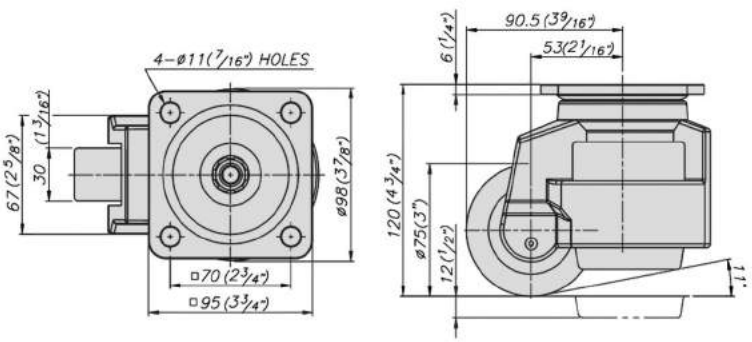

产品说明 PRODUCT DESCRIPTION

① 脚轮座(top plate)：碳钢冲压(pressed steel plate)
② 脚轮壳(frame)：铝制(al diecasted)
③ 手把(handle)：ABS resin handle
④ 底座(leveling pad)：NBR resin cushion
⑤ 轮子(wheel)：尼龙6(nylon6)
⑥ 表面处理(finish)：喷涂&镀锌
powder coated&zinc galvanized

选择事项 SELECT ITEMS

▶ 防静电底座 Variety of cushion available
▶ 防静电聚氨酯轮子 Antistatic polyurethane wheels
▶ 黑色脚轮壳 Black finish is available

规格 SPEC （℃/mm/kg）

Wheel Diameter	75 mm
Width of Tread	30 mm
Hardness of Tread	70S hore D
Size of Plate	95 × 95 mm
Plate Hole Centers	70 × 70 mm
Plate Hole	11 mm
Leveling Extent	12 mm
Offset	53 mm
Overall Height	120 mm
Load Capacity / 1pcs	750 kg
Load Capacity / 4pcs	1500 kg

JDF–100S

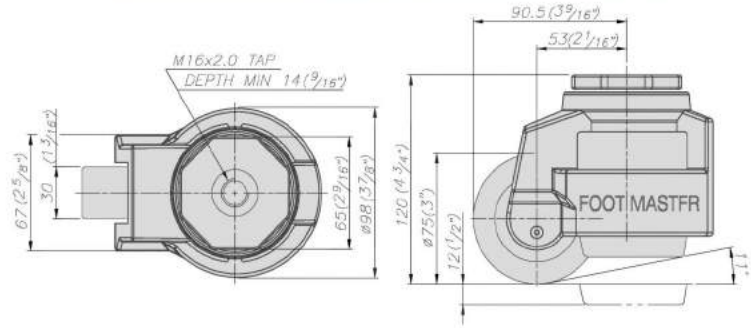

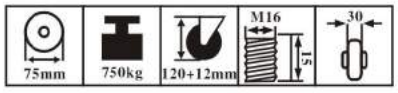

产品说明 PRODUCT DESCRIPTION

① 脚轮座(top plate)：碳钢冲压(pressed steel plate)
② 脚轮壳(frame)：铝制(al diecasted)
③ 手把(handle)：ABS resin handle
④ 底座(leveling pad)：NBR resin cushion
⑤ 轮子(wheel)：尼龙6(nylon6)
⑥ 表面处理(finish)：喷涂&镀锌
powder coated&zinc galvanized

选择事项 SELECT ITEMS

▶ 防静电底座 Variety of cushion available
▶ 防静电聚氨酯轮子 Antistatic polyurethane wheels
▶ 黑色脚轮壳 Black finish is available

规格 SPEC （℃/mm/kg）

Wheel Diameter	75 mm
Width of Tread	30 mm
Hardness of Tread	70 Shore D
Center Bolt	m16
Bolt Length	35 mm
Leveling Extent	12 mm
Offset	53 mm
Overall Height	120 mm
Load Capacity / 1pcs	750 kg
Load Capacity / 4pcs	1500 kg

JDF–120F

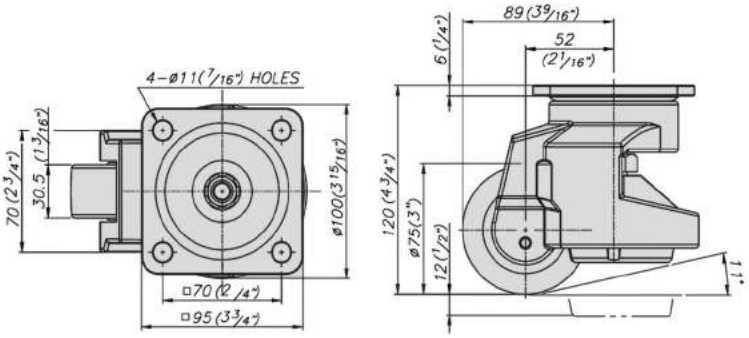

产品说明 PRODUCT DESCRIPTION

① 脚轮座(top plate)：碳钢冲压(pressed steel plate)
② 脚轮壳(frame)：铝制(al diecasted)
③ 手把(handle)：碳钢(carbon steel)
④ 底座(leveling pad)：铝制(Al die–casting frame)
⑤ 轮子(wheel)：尼龙6(nylon 6)
⑥ 表面处理(finish)：喷涂&镀锌
powder coated&zinc galvanized

选择事项 SELECT ITEMS

▶ 黑色脚轮壳 Black finish is available

规格 SPEC （℃/mm/kg）

Wheel Diameter	75 mm
Width of Tread	30 mm
Hardness of Tread	70S hore D
Size of Plate	95×95 mm
Plate Hole Centers	70×70 mm
Plate Hole	11 mm
Leveling Extent	12 mm
Offset	52 mm
Overall Height	120 mm
Load Capacity / 1pcs	1000 kg
Load Capacity / 4pcs	2000 kg

JDF–120S

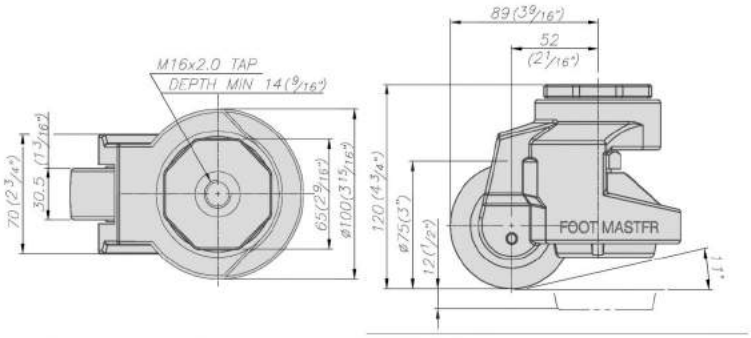

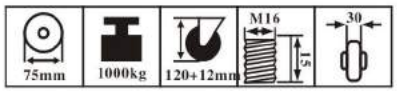

产品说明 PRODUCT DESCRIPTION

① 脚轮座(top plate)：碳钢冲压(pressed steel plate)
② 脚轮壳(frame)：铝制(al diecasted)
③ 手把(handle)：碳钢(carbon steel)
④ 底座(leveling pad)：铝制(Al die–casting frame)
⑤ 轮子(wheel)：尼龙6(nylon 6)
⑥ 表面处理(finish)：喷涂&镀锌
powder coated&zinc galvanized

选择事项 SELECT ITEMS

▶ 黑色脚轮壳 Black finish is available

规格 SPEC （℃/mm/kg）

Wheel Diameter	75 mm
Width of Tread	30 mm
Hardness of Tread	70S hore D
Center Bolt	m16
Bolt Length	35 mm
Leveling Extent	12 mm
Offset	52 mm
Overall Height	120 mm
Load Capacity / 1pcs	1000 mm
Load Capacity / 4pcs	2000 kg

JDF–150F

PRODUCT DESCRIPTION

① top plate : Pressed steel plate
② frame : Al die–casting frame
③ handle : carbon steel
④ leveling pad : Al die–casting frame
⑤ wheel : MC nylon
⑥ finish : powder coated&zinc galvanized

SELECT ITEMS

Black finish is available

SPEC （℃/mm/kg）
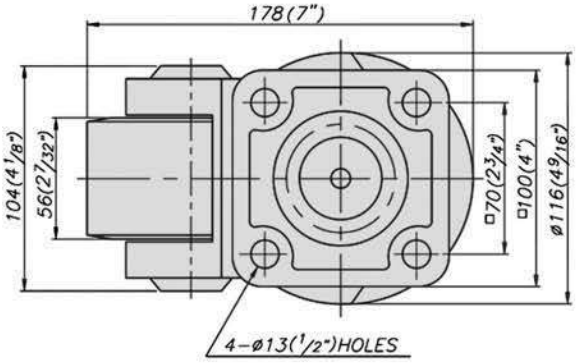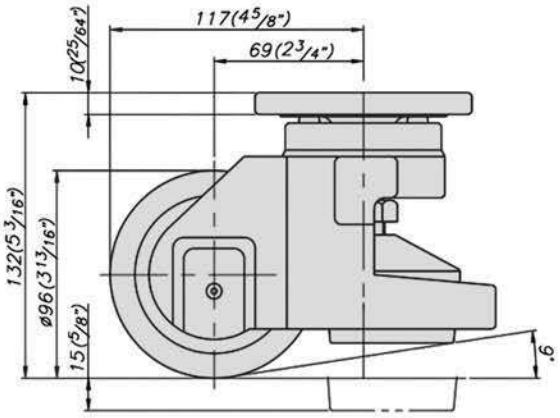
Wheel Diameter	96 mm
Width of Tread	56 mm
Hardness of Tread	70S hore D
Size of Plate	100 × 100 mm
Plate Hole Centers	70 × 70 mm
Plate Hole	13 mm
Leveling Extent	15 mm
Offset	69 mm
Overall Height	132 mm
Load Capacity / 1pcs	1500 kg
Load Capacity / 4pcs	3000 kg