Series: 017/088 KDD

DC SSR (60~200VDC)
5Amps

INPUT : DC Control
OUTPUT : Power MOSFET

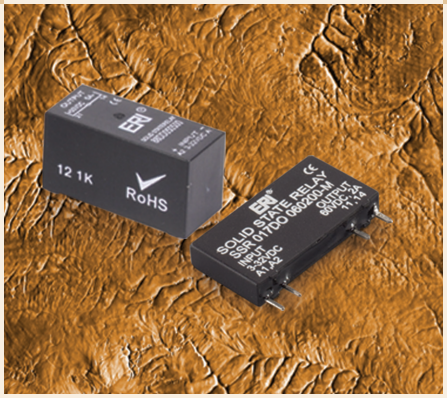

Schematic

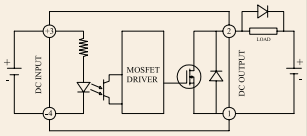

Mechanical Drawing

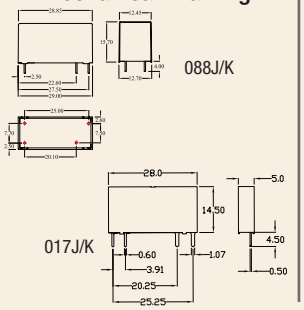

Derating Curve

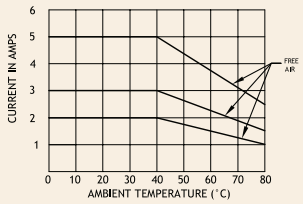

Salient Features

- Input control: DC • Opto Isolation 4000 Vac • Zero Voltage/Random Turn On • Reverse Voltage Protection
- TTL Compatible (Sink Mode) • Output NO Configuration • PCB Mount

ELECTRICAL SPECIFICATION @ TA = 25°C						
PARAMETER	SYMBOL	UNIT	PRODUCT PART NUMBERS			
			017 DO 060300	017 DO 060500	088 DD 060300	088 DD 200300
INPUT						
Control Voltage Range		Vdc	3-32	3-32	4-32	4-32
Control Current Range		mA	1-20	1-20	1-20	1-20
Pick-up Voltage		Vdc	3	3	4	4
Drop-out Voltage		Vdc	1.0	1.0	1.0	1.0
OUTPUT						
Load Current	I_T	A	3	5	3	3
Load Voltage	V	Vdc	60	60	60	200
Surge Current (Non-Rep)	I_{TSM}	A	150	150	210	210
On state Voltage Drop	V_T	Vdc	1.6	1.6	1.6	1.6
Off state leakage Current@rated Voltage	Idrm	µA	100	100	100	100
Thermal Resistance	R_{TH}	°C/W	1.3	1.3	1.0	1.0
Turn-On	T-on	µs	760	760	500	100
Turn -Off	T-off	µs	850	850	800	960
Operating Temp	T Oper	°C	-30 to +80	-30 to +80	-30 to +80	-30 to +80