# INDEX

## Adapter Sleeves

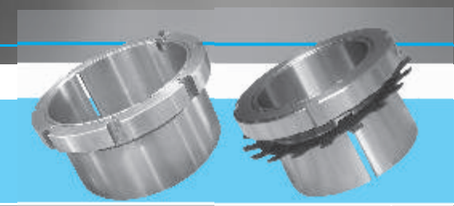


| | |
|---|---|
| H2 | 7p |
| H3 | 8p |
| H23 | 9p |
| H23 | 10p |
| H31 | 11p |
| H32 | 12p |
| H30 | 13p |
| H39 | 14p |


## Adapter Hydraulic Sleeves

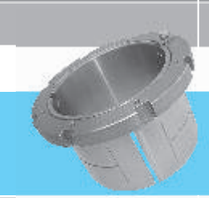


| | |
|---|---|
| HOH 23 | 15p |
| HOH 31 | 16p |
| HOH 30 | 17p |
| HOH 39 | 18p |


## Withdrawal Sleeves

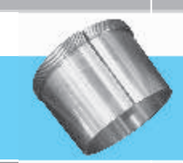


| | |
|---|---|
| AH 2 | 19p |
| AH 3 | 20p |
| AH 23 | 21p |
| AH 23 | 22p |
| AH 32 | 23p |
| AH 22 | 24p |
| AH 30 | 25p |
| AH 240 | 26p |
| AH 241 | 27p |
| AH 39 | 28p |




## Lock Nuts

| | |
|---|---|
| | 29p |
| KM AN | 30p |
| KM AN KML ANL | 31p |
| HM 31/AN | 32p |
| HM 30/ANL | 33p |
| HM / HN | 34p |
| HML / HNL | 35p |


## Lock Washers

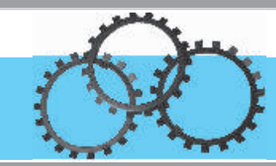


| | |
|---|---|
| MB / AW | 36p |
| MBL / AWL | 37p |


## Lock Plates

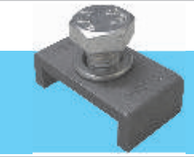


| | |
|---|---|
| MS 31 / AL | 38p |
| MS 30 / ALL | 38p |

# Index Table

| Taper Bore Beaing No. | | | | | Applicable adapter and withdrawal sleeves series | |
|---|---|---|---|---|---|---|
| Self-Ailgning Ball Bearings | Spherical Roll Bearings | Deep Groove Ball Bearings | Cylindrical Roll Bear-ings | Insert Bearings for Bearing units | | |
| 1204K-1222K | - | 62211K-6222K | N206K-N222K<br>NU204K-NU222K | - | ADAPTER SLEEVES | H 2 |
| 1304K-1322K<br>2204K-2222K | 22205K-22222K<br>21308K-21322K | 6311K-6322K | NU2205K-NU2222K<br>N306K-N322K<br>NU304K-NU322K | - | | H 3 |
| 2304K-2322K | 23218K-23256K<br>22308K-22356K | - | NU2305K-NU2356K | UK205-UK218<br>UK305-UK328<br>UKX05-UKX20 | | H 23<br>HOH 23 |
| - | 23120K-232/500K<br>22224K-22264K | 6324K-6340K | NU2224K-NU2264K<br>N(NU)324K-340K | - | | H 31<br>HOH 31 |
| - | 23260K-232/500K | - | - | - | | H 32<br>HOH 32 |
| - | 23024K-230/500K | 6224K-6240K | N(NU)224K-264K<br>N(NU)344K-356K | - | | H 30<br>HOH 39 |
| - | 23936K-239/500K | - | - | - | | H 39<br>HOH 39 |
| 1208K-1222K | - | - | N206K-N222K<br>NU208-NU222K | - | | AH 2 |
| 1308K-1322K<br>2208K-2220K | 22208K-22220K<br>21308K-21322K | 6311K-6322K | N(NU)308-322K<br>NU2208K-NU2220K | - | WITHDRAWAL SLEEVES | AH 3 |
| 2308K-2322K | 23244K-23256K<br>22308K-22356K | - | NU2308K-NU2356K | - | | AH 23<br>AOH 23 |
| 2222K | 23120K-231/500K<br>22222K-22234K | - | NU2222K-NU2234K | - | | AH 31<br>AOH 31 |
| - | 23218K-23240<br>23260K-232/500K | - | - | - | | AH 32<br>AOH 32 |
| - | 22236K-22264K | - | NU2236K-NU2264K | - | | AH 22<br>AOH 22 |
| - | 23024K-230/500K | - | NU3024K-Nu3064 | - | | AH 30<br>AOH 30 |
| - | 24024K-240/500K | - | - | - | | AH 240<br>AOH 240 |
| - | 24122K-241/500K | - | - | - | | AH 241<br>AOH 241 |
| - | 23936K-239500K | - | - | - | | AH 39<br>AOH 39 |
| Locknuts | | | | | | KM. KML<br>HM. HML |
| Lockwashers and Lockplates | | | | | | MB. MBL<br>MS31, MS30 |

# Adapter Sleeves

HE 2
HS 2
HA 2

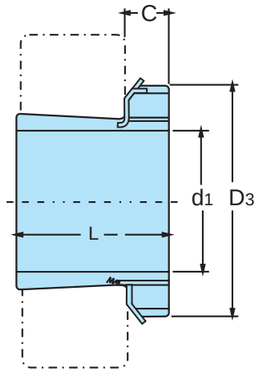


TAPER 1:12

| Adapter Sleeves No. | d1 | | | | L | D3 | C | Lock | Lock | Weight |
|---|---|---|---|---|---|---|---|---|---|---|
| | H mm | HE in | HS in | HA in | mm | mm | mm | Nuts | Washers | Kg |
| H204 | 17 | - | - | - | 24 | 32 | 7 | KM 04 | MB 04 | 0.041 |
| H205 | 20 | 3/4 | 7/8 | 13/16 | 26 | 38 | 8 | KM 05 | MB 05 | 0.070 |
| H206 | 25 | 1 | 7/8 | 15/16 | 27 | 45 | 8 | KM 06 | MB 06 | 0.099 |
| H207 | 30 | 1 1/4 | 1 1/8 | 1 3/16 | 29 | 52 | 9 | KM 07 | MB 07 | 0.125 |
| H208 | 35 | 1 1/4 | 1 3/8 | 1 5/16 | 31 | 58 | 10 | KM 08 | MB 08 | 0.174 |
| H209 | 40 | 1 1/2 | 1 5/8 | 1 7/16 | 33 | 65 | 11 | KM 09 | MB 09 | 0.227 |
| H210 | 45 | 1 3/4 | 1 5/8 | 1 11/16 | 35 | 70 | 12 | KM 10 | MB 10 | 0.740 |
| H211 | 50 | 2 | 1 7/8 | 1 15/16 | 37 | 75 | 12 | KM 11 | MB 11 | 0.308 |
| H212 | 55 | 2 1/4 (2”) | 2 1/8 | 2 1/16 | 38 | 80 | 13 | KM 12 | MB 12 | 0.346 |
| H213 | 60 | 2 1/4 | 2 3/8 | 2 3/16 | 40 | 85 | 14 | KM 13 | MB 13 | 0.401 |
| H214 | 60 | 2 3/8 | - | - | 41 | 92 | 14 | KM 14 | MB 14 | 0.593 |
| H215 | 65 | 2 1/2 | 2 5/8 | 2 7/16 | 43 | 98 | 15 | KM 15 | MB 15 | 0.707 |
| H216 | 70 | 2 3/4 | 2 7/8 | 2 11/16 | 46 | 105 | 17 | KM 16 | MB 16 | 0.882 |
| H217 | 75 | 3 | - | 2 15/16 | 50 | 110 | 18 | KM 17 | MB 17 | 1.020 |
| H218 | 80 | 3 1/4 | - | 3 3/16 | 52 | 120 | 18 | KM 18 | MB 18 | 1.190 |
| H219 | 85 | 3 1/4 | - | 3 5/16 | 55 | 125 | 19 | KM 19 | MB 19 | 1.370 |
| H220 | 90 | 3 1/2 | - | 3 7/16 | 58 | 130 | 20 | KM 20 | MB 20 | 1.490 |
| H221 | 95 | - | - | - | 60 | 140 | 20 | KM 21 | MB 21 | 1.720 |
| H222 | 100 | 4 | - | 3 15/16 | 63 | 145 | 21 | KM 22 | MB 22 | 1.930 |

Adapter sleeves are supplied complete with lock nuts and lock washers or lock plates.

H 3
HE 3
HS 3
HA 3

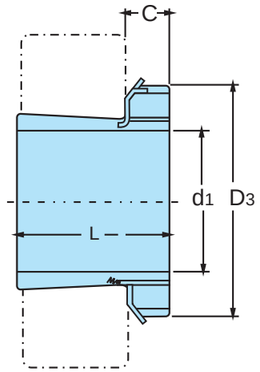


TAPER 1:12

| Adapter Sleeves No. | d1 H mm | d1 HE in | d1 HS in | d1 HA in | L mm | D3 mm | C mm | Lock Nuts | Lock Washers | Weight Kg |
|---|---|---|---|---|---|---|---|---|---|---|
| H304 | 17 | - | - | - | 28 | 32 | 7 | KM 04 | MB 04 | 0.045 |
| H305 | 20 | 3/4 | 7/8 | 13/16 | 29 | 38 | 8 | KM 05 | MB 05 | 0.075 |
| H306 | 25 | 1 | 7/8 | 15/16 | 31 | 45 | 8 | KM 06 | MB 06 | 0.109 |
| H307 | 30 | 1 1/4 | 1 1/8 | 1 3/16 | 35 | 52 | 9 | KM 07 | MB 07 | 0.142 |
| H308 | 35 | 1 1/4 | 1 3/8 | 1 5/16 | 36 | 58 | 10 | KM 08 | MB 08 | 0.189 |
| H309 | 40 | 1 1/2 | 1 5/8 | 1 7/16 | 39 | 65 | 11 | KM 09 | MB 09 | 0.248 |
| H310 | 45 | 1 3/4 | 1 5/8 | 1 11/16 | 42 | 70 | 12 | KM 10 | MB 10 | 0.303 |
| H311 | 50 | 2 | 1 7/8 | 1 15/16 | 45 | 75 | 12 | KM 11 | MB 11 | 0.450 |
| H312 | 55 | 2 1/4 (2") | 2 1/8 | 2 1/16 | 47 | 80 | 13 | KM 12 | MB 12 | 0.394 |
| H313 | 60 | 2 1/4 | 2 3/8 | 2 3/16 | 50 | 85 | 14 | KM 13 | MB 13 | 0.458 |
| H314 | 60 | 2 3/8 | - | - | 52 | 92 | 14 | KM 14 | MB 14 | 0.723 |
| H315 | 65 | 2 1/2 | 2 5/8 | 2 7/16 | 55 | 98 | 15 | KM 15 | MB 15 | 0.831 |
| H316 | 70 | 2 3/4 | 2 7/8 | 2 11/16 | 59 | 105 | 17 | KM 16 | MB 16 | 1.030 |
| H317 | 75 | 3 | - | 2 15/16 | 63 | 110 | 18 | KM 17 | MB 17 | 1.180 |
| H318 | 80 | 3 1/4 | - | 3 3/16 | 65 | 120 | 18 | KM 18 | MB 18 | 1.370 |
| H319 | 85 | 3 1/4 | - | 3 5/16 | 68 | 125 | 19 | KM 19 | MB 19 | 1.560 |
| H320 | 90 | 3 1/2 | - | 3 7/16 | 71 | 130 | 20 | KM 20 | MB 20 | 1.690 |
| H321 | 95 | - | - | - | 74 | 140 | 20 | KM 21 | MB 21 | 1.950 |
| H322 | 100 | 4 | - | 3 15/16 | 77 | 145 | 21 | KM 22 | MB 22 | 2.180 |

• Adapter sleeves are supplied complete with lock nuts and lock washers or lock plates.





H 23
HE 23
HS 23
HA 23

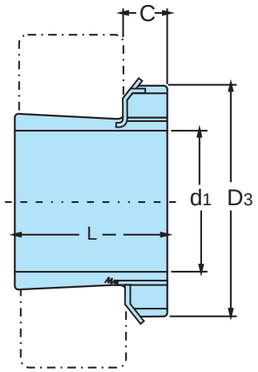


TAPER 1:12

| Adapter Sleeves No. | d1 H mm | d1 HE in | d1 HS in | d1 HA in | L mm | D3 mm | C mm | Lock Nuts | Lock Washers | Weight Kg |
|---|---|---|---|---|---|---|---|---|---|---|
| H2304 | 17 | - | - | - | 31 | 32 | 7 | KM 04 | MB 04 | 0.049 |
| H2305 | 20 | 3/4 | 7/8 | 13/16 | 35 | 38 | 8 | KM 05 | MB 05 | 0.087 |
| H2306 | 25 | 1 | 7/8 | 15/16 | 38 | 45 | 8 | KM 06 | MB 06 | 0.126 |
| H2307 | 30 | 1 1/4 | 1 1/8 | 1 3/16 | 43 | 52 | 9 | KM 07 | MB 07 | 0.165 |
| H2308 | 35 | 1 1/4 | 1 3/8 | 1 5/16 | 46 | 58 | 10 | KM 08 | MB 08 | 0.224 |
| H2309 | 40 | 1 1/2 | 1 5/8 | 1 7/16 | 50 | 65 | 11 | KM 09 | MB 09 | 0.280 |
| H2310 | 45 | 1 3/4 | 1 5/8 | 1 11/16 | 55 | 70 | 12 | KM 10 | MB 10 | 0.362 |
| H2311 | 50 | 2 | 1 7/8 | 1 15/16 | 59 | 75 | 12 | KM 11 | MB 11 | 0.420 |
| H2312 | 55 | 2 1/4 | 2 1/8 | 2 1/16 | 62 | 80 | 13 | KM 12 | MB 12 | 0.481 |
| H2313 | 60 | 2 1/4 | 2 3/8 | 2 3/16 | 65 | 85 | 14 | KM 13 | MB 13 | 0.557 |
| H2314 | 60 | 2 3/8 | - | - | 68 | 92 | 14 | KM 14 | MB 14 | 0.897 |
| H2315 | 65 | 2 1/2 | 2 5/8 | 2 7/16 | 73 | 98 | 15 | KM 15 | MB 15 | 1.050 |
| H2316 | 70 | 2 3/4 | 2 7/8 | 2 11/16 | 78 | 105 | 17 | KM 16 | MB 16 | 1.280 |
| H2317 | 75 | 3 | - | 2 15/16 | 82 | 110 | 18 | KM 17 | MB 17 | 1.450 |
| H2318 | 80 | 3 1/4 | - | 3 3/16 | 86 | 120 | 18 | KM 18 | MB 18 | 1.690 |
| H2319 | 85 | 3 1/4 | - | 3 5/16 | 90 | 125 | 19 | KM 19 | MB 19 | 1.920 |
| H2320 | 90 | 3 1/2 | - | 3 7/16 | 97 | 130 | 20 | KM 20 | MB 20 | 2.150 |
| H2321 | 95 | - | - | - | 101 | 140 | 20 | KM 21 | MB 21 | 2.460 |
| H2322 | 100 | 4 | - | 3 15/16 | 105 | 145 | 21 | KM 22 | MB 22 | 2.740 |
| H2324 | 110 | 4 1/4 | - | 4 3/16 | 112 | 155 | 22 | KM 24 | MB 24 | 3.190 |
| H2326 | 115 | 4 1/2 | - | 4 7/16 | 121 | 165 | 23 | KM 26 | MB 26 | 4.600 |

• Adapter sleeves are supplied complete with lock nuts and lock washers or lock plates.

H 23
HE 23
HS 23
HA 23

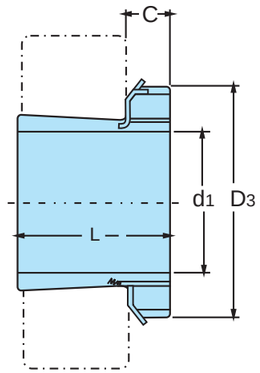


TAPER 1:12

| Adapter Sleeves No. | d1 | | | | L | D3 | C | C1 | Lock | Lock | Weight |
|---|---|---|---|---|---|---|---|---|---|---|---|
| | H mm | HE in | HS in | HA in | mm | mm | mm | mm | Nuts | Washers | Kg |
| H2328 | 125 | 5 | #### | 4 15/16 | 131 | 180 | 24 | - | KM 28 | MB 28 | 5.550 |
| H2330 | 135 | 5 1/4 | - | 5 3/16 | 139 | 195 | 26 | - | KM 30 | MB 30 | 6.630 |
| H2332 | 140 | 5 1/2 | - | 5 7/16 | 147 | 210 | 28 | - | KM 32 | MB 32 | 9.140 |
| H2334 | 150 | 6 | - | 5 15/16 | 154 | 220 | 29 | - | KM 34 | MB 34 | ##### |
| H2336 | 160 | 6 1/2 | - | 6 7/16 | 161 | 230 | 30 | - | KM 36 | MB 36 | ##### |
| H2338 | 170 | 6 3/4 | - | 6 15/16 | 169 | 240 | 31 | - | KM 38 | MB 38 | ##### |
| H2340 | 180 | 7 | - | 7 3/16 | 176 | 250 | 32 | - | KM 40 | MB 40 | ##### |
| H2344 | 200 | - | - | - | 186 | 280 | 32 | 44 | HM 44 | MB 44 | ##### |
| H2348 | 220 | 8 1/2 | - | 8 15/16 | 199 | 300 | 34 | 46 | HM 48 | MB 48 | ##### |
| H2352 | 240 | - | - | - | 211 | 330 | 36 | 49 | HM 52 | MB 52 | ##### |
| H2356 | 260 | - | - | - | 224 | 350 | 38 | 51 | HM 56 | MB 56 | ##### |

• Adapter sleeves are supplied complete with lock nuts and lock washers or lock plates.





H 31
HE 31
HS 31
HA 31

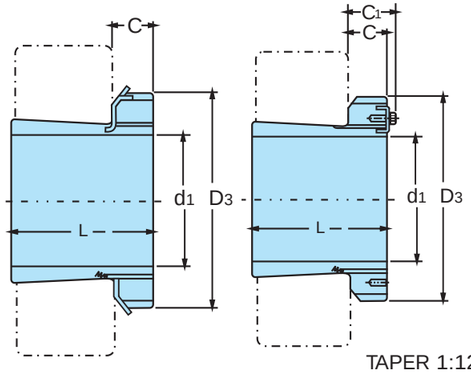


TAPER 1:12

| Adapter Sleeves No. | d1 | | | L | D3 | C | C1 | Lock | Lock | Weight |
|---|---|---|---|---|---|---|---|---|---|---|
| | H mm | HE mm | HS in | mm | mm | mm | mm | Nuts | Washers | Kg |
| H3120 | 90 | 3 1/2 | 3 7/16 | 76 | 130 | 20 | - | KM 20 | MB 20 | 1.800 |
| H3122 | 100 | 4 | 3 15/16 | 81 | 145 | 21 | - | KM 22 | MB 22 | 2.250 |
| H3124 | 110 | 4 1/4 | 4 3/16 | 88 | 155 | 22 | - | KM 24 | MB 24 | 2.640 |
| H3126 | 115 | 4 1/2 | 4 7/16 | 92 | 165 | 23 | - | KM 26 | MB 26 | 3.660 |
| H3128 | 125 | 5 | 4 15/16 | 97 | 180 | 24 | - | KM 28 | MB 28 | 4.340 |
| H3130 | 135 | 5 1/2 | 5 3/16 | 111 | 195 | 26 | - | KM 30 | MB 30 | 5.520 |
| H3132 | 140 | 6 1/2 | 5 7/16 | 119 | 210 | 28 | - | KM 32 | MB 32 | 7.670 |
| H3134 | 150 | 6 3/4 | 5 15/16 | 122 | 220 | 29 | - | KM 34 | MB 34 | 8.380 |
| H3136 | 160 | 7 | 6 7/16 | 131 | 230 | 30 | - | KM 36 | MB 36 | 9.500 |
| H3138 | 170 | - | 6 15/16 | 141 | 240 | 31 | - | KM 38 | MB 38 | 10.800 |
| H3140 | 180 | - | 7 3/16 | 150 | 250 | 32 | - | KM 40 | MB 40 | 12.100 |
| H3144 | 200 | 8 1/2 | 7 15/16 | 161 | 280 | 32 | 44 | HM 44 | MB 44 | 14.700 |
| H3148 | 220 | 9 1/2 | - | 172 | 300 | 34 | 46 | HM 48 | MB 48 | 17.300 |
| H3152 | 240 | - | - | 190 | 330 | 36 | 49 | HM 52 | MB 52 | 22.000 |
| H3156 | 260 | - | - | 195 | 350 | 38 | 51 | HM 56 | MB 56 | 24.500 |
| H3160 | 280 | - | - | 208 | 380 | 40 | 53 | HM31 60 | MS31 60 | 30.200 |
| H3164 | 300 | - | - | 226 | 400 | 42 | 56 | HM31 64 | MS31 64 | 34.900 |
| H3168 | 320 | - | - | 254 | 440 | 55 | 72 | HM31 68 | MS31 68 | 49.500 |
| H3172 | 340 | - | - | 259 | 460 | 58 | 75 | HM31 72 | MS31 72 | 54.200 |
| H3176 | 360 | - | - | 264 | 490 | 60 | 77 | HM31 76 | MS31 76 | 61.700 |
| H3180 | 380 | - | - | 272 | 520 | 62 | 82 | HM31 80 | MS31 80 | 70.600 |
| H3184 | 400 | - | - | 304 | 540 | 70 | 90 | HM31 84 | MS31 84 | 84.200 |
| H3188 | 410 | - | - | 307 | 560 | 70 | 90 | HM31 88 | MS31 88 | 104.000 |
| H3192 | 430 | - | - | 326 | 580 | 75 | 95 | HM31 92 | MS31 92 | 116.000 |
| H3196 | 450 | - | - | 335 | 620 | 75 | 95 | HM31 96 | MS31 96 | 133.000 |
| H31/500 | 470 | - | - | 356 | 630 | 80 | 100 | HM31 100 | MS31 100 | 143.000 |

• Adapter sleeves are supplied complete with lock nuts and lock washers or lock plate plates.
• Adapter for these bores srw designated HE, e.g. HE3120 .
• Adapter for these bores srw designated HS, e.g. HS3120 .

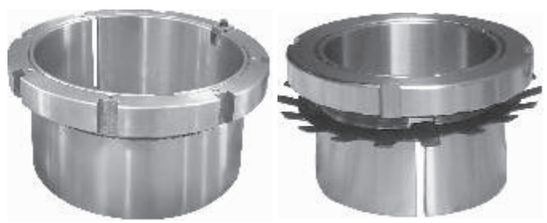

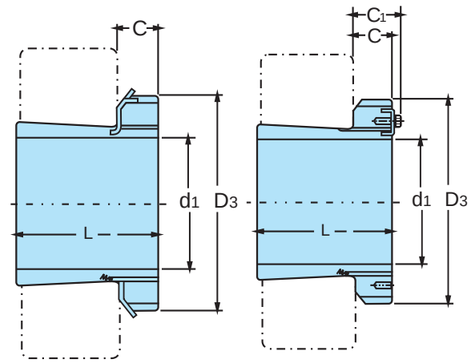


## H 32

TAPER 1:12

| Adapter Sleeves No. | d1 mm | L mm | D3 mm | C mm | C1 mm | Lock Nuts | Lock Washers | Weight Kg |
|---|---|---|---|---|---|---|---|---|
| H3260 | 280 | 240 | 380 | 40 | 53 | HM31 60 | MS31 60 | 34.100 |
| H3264 | 300 | 258 | 400 | 42 | 56 | HM31 64 | MS31 64 | 39.300 |
| H3268 | 320 | 288 | 440 | 55 | 72 | HM31 68 | MS31 68 | 54.600 |
| H3272 | 340 | 299 | 460 | 58 | 75 | HM31 72 | MS31 72 | 60.200 |
| H3276 | 360 | 310 | 490 | 60 | 77 | HM31 76 | MS31 76 | 69.600 |
| H3280 | 380 | 328 | 520 | 62 | 82 | HM31 80 | MS31 80 | 81.000 |
| H3284 | 400 | 352 | 540 | 70 | 90 | HM31 84 | MS31 84 | 94.000 |
| H3288 | 410 | 361 | 560 | 70 | 90 | HM31 88 | MS31 88 | 118.000 |
| H3292 | 430 | 382 | 580 | 75 | 95 | HM31 92 | MS31 92 | 132.000 |
| H3296 | 450 | 397 | 620 | 75 | 95 | HM31 96 | MS31 96 | 152.000 |
| H32/500 | 470 | 428 | 630 | 80 | 100 | HM31 100 | MS31 100 | 166.000 |

• Adapter sleeves are supplied complete with lock nuts and lock washers or lock plates.

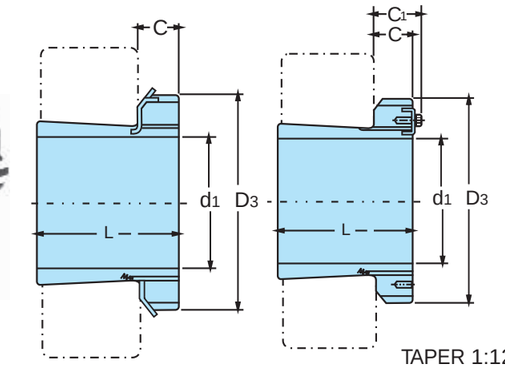


## H 30
## HE 30
## HA 30

TAPER 1:12

| Adapter Sleeves No. | d1 H mm | d1 HE mm | d1 HS in | L mm | D3 mm | C mm | C1 mm | Lock Nuts | Lock Washers and Lock Platea | Weight Kg |
|---|---|---|---|---|---|---|---|---|---|---|
| H3024 | 110 | 4 1/4 | 4 3/16 | 72 | 145 | 22 | - | KML 24 | MBL 24 | 1.930 |
| H3026 | 115 | 4 1/2 | 4 7/16 | 80 | 155 | 23 | - | KML 26 | MBL 26 | 2.850 |
| H3028 | 125 | 5 | 4 15/16 | 82 | 165 | 24 | - | KML 28 | MBL 26 | 3.160 |
| H3030 | 135 | 5 1/4 | 5 3/16 | 87 | 180 | 26 | - | KML 30 | MBL 30 | 3.890 |
| H3032 | 140 | 5 1/2 | 5 7/16 | 93 | 190 | 28 | - | KML 32 | MBL 32 | 5.210 |
| H3034 | 150 | 6 | 5 15/16 | 101 | 200 | 29 | - | KML 34 | MBL 34 | 5.990 |
| H3036 | 160 | 6 1/2 | 6 7/16 | 109 | 210 | 30 | - | KML 36 | MBL 36 | 6.830 |
| H3038 | 170 | 6 3/4 | 6 15/16 | 112 | 220 | 31 | - | KML 38 | MBL 38 | 7.450 |
| H3040 | 180 | 7 | 7 3/16 | 120 | 240 | 32 | - | KML 40 | MBL 40 | 9.190 |
| H3044 | 200 | - | 7 15/16 | 126 | 260 | 32 | 41 | HML 44 | MS30 44 | 10.300 |
| H3048 | 220 | - | 8 15/16 | 133 | 290 | 34 | 46 | HML 48 | MS30 48 | 13.200 |
| H3052 | 240 | 9 1/2 | 9 7/16 | 145 | 310 | 34 | 46 | HML 52 | MS30 52 | 15.300 |
| H3056 | 260 | - | ###### | 152 | 330 | 38 | 50 | HML 56 | MS30 56 | 17.700 |
| H3060 | 280 | - | ###### | 168 | 360 | 42 | 54 | HML 60 | MS30 60 | 22.800 |
| H3064 | 300 | - | ###### | 171 | 380 | 42 | 55 | HML 64 | MS30 64 | 24.600 |
| H3068 | 320 | - | ###### | 187 | 400 | 45 | 58 | HML 68 | MS30 68 | 28.700 |
| H3072 | 340 | - | ###### | 188 | 420 | 45 | 58 | HML 72 | MS30 72 | 30.500 |
| H3076 | 360 | - | ###### | 193 | 450 | 48 | 62 | HML 76 | MS30 76 | 35.800 |
| H3080 | 380 | - | - | 210 | 470 | 52 | 66 | HML 80 | MS30 80 | 41.300 |
| H3084 | 400 | - | - | 212 | 490 | 52 | 66 | HML 84 | MS30 84 | 43.700 |
| H3088 | 410 | - | - | 228 | 520 | 60 | 77 | HML 88 | MS30 88 | 65.200 |
| H3092 | 430 | - | - | 234 | 540 | 60 | 77 | HML 92 | MS30 92 | 69.500 |
| H3096 | 450 | - | - | 237 | 560 | 60 | 77 | HML 96 | MS30 96 | 73.300 |
| H30/500 | 470 | - | - | 247 | 580 | 68 | 85 | HML 100 | MS30 100 | 81.800 |

• Adapter sleeves are supplied complete with lock nuts and lock washers or lock plate plates.
• Adapter for these bores srw designated HE, e.g. HE3024
• Adapter for these bores srw designated HS, e.g. HS3024

# Adapter Sleeves

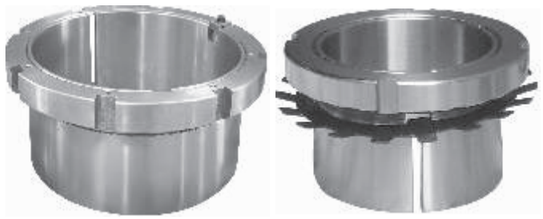

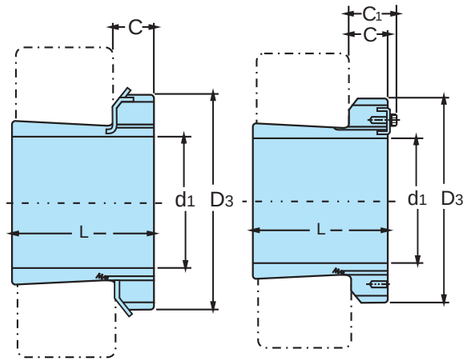


## H 39

TAPER 1:12

| Adapter Sleeves No. | d1 mm | L mm | D3 mm | C mm | C1 mm | Lock Nuts | Lock Washers and Lock Platea | Weight Kg |
|---|---|---|---|---|---|---|---|---|
| H3936 | 160 | 87 | 210 | 29.5 | - | KM 36 | MB 36 | 5.700 |
| H3938 | 170 | 89 | 220 | 30.5 | - | KM 38 | MB 38 | 6.190 |
| H3940 | 180 | 98 | 240 | 31.5 | - | KM 40 | MB 40 | 7.890 |
| H3944 | 200 | 96 | 260 | 32 | 41 | HM 44 | MB 44 | 8.160 |
| H3948 | 220 | 101 | 290 | 34 | 46 | HM 48 | MB 48 | 10.700 |
| H3952 | 240 | 116 | 310 | 34 | 46 | HM 52 | MB 52 | 12.800 |
| H3956 | 260 | 121 | 330 | 38 | 50 | HM 56 | MB 56 | 14.800 |
| H3960 | 280 | 140 | 360 | 42 | 54 | HM31 60 | MS31 60 | 19.800 |
| H3964 | 300 | 140 | 380 | 42 | 55 | HM31 64 | MS31 64 | 21.000 |
| H3968 | 320 | 144 | 400 | 45 | 58 | HM31 68 | MS31 68 | 23.500 |
| H3972 | 340 | 144 | 420 | 45 | 58 | HM31 72 | MS31 72 | 24.500 |
| H3976 | 360 | 164 | 450 | 48 | 62 | HM31 76 | MS31 76 | 31.500 |
| H3980 | 380 | 168 | 470 | 52 | 66 | HM31 80 | MS31 80 | 35.000 |
| H3984 | 400 | 168 | 490 | 52 | 66 | HM31 84 | MS31 84 | 36.600 |
| H3988 | 410 | 189 | 520 | 60 | 77 | HM31 88 | MS31 88 | 57.300 |
| H3992 | 430 | 189 | 540 | 60 | 77 | HM31 92 | MS31 92 | 59.900 |
| H3996 | 450 | 200 | 560 | 60 | 77 | HM31 96 | MS31 96 | 64.900 |
| H39/500 | 470 | 208 | 580 | 68 | 85 | HM31 100 | MS31 100 | 73.100 |

• Adapter sleeves are supplied complete with lock nuts and lock washers or lock plates.



# Hydraullic Adapter Sleeves

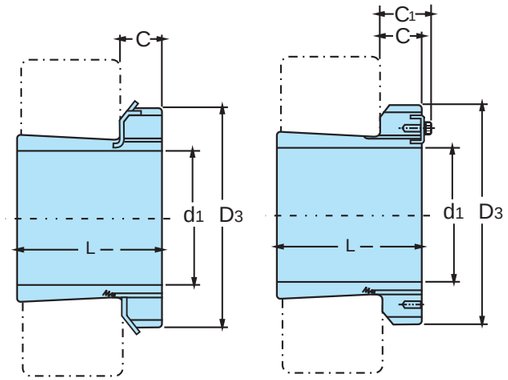


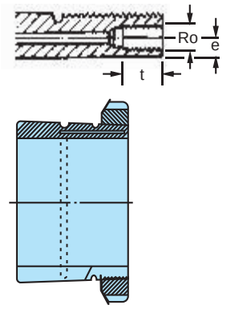


## HOH 23
## HOH 32

TAPER 1:12

| Hydraulic Adapter Sleeves No. | d1 mm | L mm | D3 mm | C mm | C1 mm | RO | e mm | t mm | Lock Nuts | Lock Washers | Weight Kg |
|---|---|---|---|---|---|---|---|---|---|---|---|
| HOH 2332 | 140 | 147 | 210 | 28 | - | M6 | 4.0 | 7 | KM 32 | MB 32 | 9.140 |
| HOH 2334 | 150 | 154 | 220 | 29 | - | M6 | 4.0 | 7 | KM 34 | MB 34 | 10.200 |
| HOH 2336 | 160 | 161 | 230 | 30 | - | M6 | 4.0 | 7 | KM 36 | MB 36 | 11.300 |
| HOH 2338 | 170 | 169 | 240 | 31 | - | M6 | 4.0 | 7 | KM 38 | MB 38 | 12.600 |
| HOH 2340 | 180 | 176 | 250 | 32 | - | M6 | 4.0 | 7 | KM 40 | MB 40 | 13.900 |
| HOH 2344 | 200 | 186 | 280 | 32 | 44 | M6 | 4.0 | 7 | HM 44 | MB 44 | 16.700 |
| HOH 2348 | 220 | 199 | 300 | 34 | 46 | M6 | 4.0 | 7 | HM 48 | MB 48 | 19.700 |
| HOH 2352 | 240 | 211 | 330 | 36 | 49 | M6 | 4.0 | 7 | HM 52 | MB 52 | 24.200 |
| HOH 2356 | 260 | 224 | 350 | 38 | 51 | M6 | 4.0 | 7 | HM 56 | MB 56 | 27.800 |

| Hydraulic Adapter Sleeves No. | d1 mm | L mm | D3 mm | C mm | C1 mm | RO | e mm | t mm | Lock Nuts | Lock Platea | Weight Kg |
|---|---|---|---|---|---|---|---|---|---|---|---|
| HOH 3260 | 280 | 240 | 380 | 40 | 53 | M6 | 4 | 7 | HM31 60 | MS31 60 | 34.100 |
| HOH 3264 | 300 | 258 | 400 | 42 | 56 | M6 | 3.5 | 7 | HM31 64 | MS31 64 | 39.300 |
| HOH 3268 | 320 | 288 | 440 | 55 | 72 | M6 | 3.5 | 7 | HM31 68 | MS31 68 | 54.600 |
| HOH 3272 | 340 | 299 | 460 | 58 | 75 | M6 | 3.5 | 7 | HM31 72 | MS31 72 | 60.200 |
| HOH 3276 | 360 | 310 | 490 | 60 | 77 | M6 | 3.5 | 7 | HM31 76 | MS31 76 | 69.600 |
| HOH 3280 | 380 | 328 | 520 | 62 | 82 | M6 | 3.5 | 7 | HM31 80 | MS31 80 | 81.000 |
| HOH 3284 | 400 | 352 | 540 | 70 | 90 | M6 | 3.5 | 7 | HM31 84 | MS31 84 | 94.000 |
| HOH 3288 | 410 | 361 | 560 | 70 | 90 | M8 | 6.5 | 12 | HM31 88 | MS31 88 | ###### |
| HOH 3292 | 430 | 382 | 580 | 75 | 95 | M8 | 6.5 | 12 | HM31 92 | MS31 92 | ###### |
| HOH 3296 | 450 | 397 | 620 | 75 | 95 | M8 | 6.5 | 12 | HM31 96 | MS31 96 | ###### |
| HOH32/500 | 470 | 428 | 630 | 80 | 100 | M8 | 6.5 | 12 | HM31 100 | MS31 100 | ###### |

• Indo Steel adapter sleeves are supplied complete with lock nuts and lock washers or lock plates.

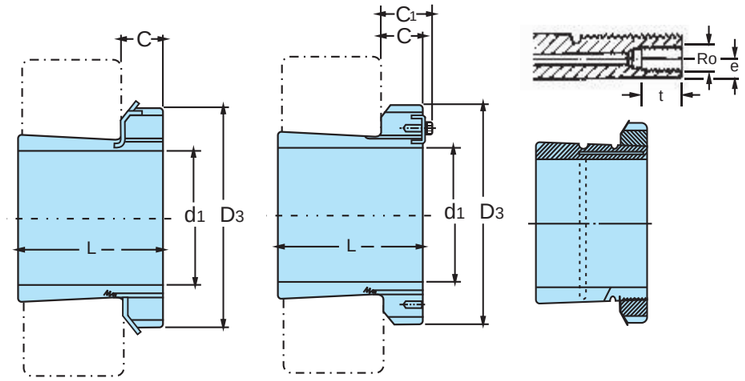


## HOH 31

TAPER 1:12

| Hydraulic Adapter Sleeves No. | d1 mm | L mm | D3 mm | C mm | C1 mm | RO | e mm | t mm | Lock Nuts | Lock Washers | Weight Kg |
|---|---|---|---|---|---|---|---|---|---|---|---|
| HOH 3132 | 140 | 119 | 210 | 28 | - | M6 | 4.0 | 7 | KM 32 | MB 32 | 7.670 |
| HOH 3134 | 150 | 122 | 220 | 29 | - | M6 | 4.0 | 7 | KM 34 | MB 34 | 8.380 |
| HOH 3136 | 160 | 131 | 230 | 30 | - | M6 | 4.0 | 7 | KM 36 | MB 36 | 9.500 |
| HOH 3138 | 170 | 141 | 240 | 31 | - | M6 | 4.0 | 7 | KM 38 | MB 38 | 10.800 |
| HOH 3140 | 180 | 150 | 250 | 32 | - | M6 | 4.0 | 7 | KM 40 | MB 40 | 12.100 |
| HOH 3144 | 200 | 161 | 280 | 32 | 44 | M6 | 4.0 | 7 | HM31 44 | MS31 44 | 14.700 |
| HOH 3148 | 220 | 172 | 300 | 34 | 46 | M6 | 4.0 | 7 | HM31 48 | MS31 48 | 17.300 |
| HOH 3152 | 240 | 190 | 330 | 36 | 49 | M6 | 4.0 | 7 | HM31 52 | MS31 52 | 22.000 |
| HOH 3156 | 260 | 195 | 350 | 38 | 51 | M6 | 4.0 | 7 | HM31 56 | MS31 56 | 24.500 |
| HOH 3160 | 280 | 208 | 380 | 40 | 53 | M6 | 4.0 | 7 | HM31 60 | MS31 60 | 30.200 |
| HOH 3164 | 300 | 226 | 400 | 42 | 56 | M6 | 3.5 | 7 | HM31 64 | MS31 64 | 34.900 |
| HOH 3168 | 320 | 254 | 440 | 55 | 72 | M6 | 3.5 | 7 | HM31 68 | MS31 68 | 49.500 |
| HOH 3172 | 340 | 259 | 460 | 58 | 75 | M6 | 3.5 | 7 | HM31 72 | MS31 72 | 54.200 |
| HOH 3176 | 360 | 264 | 490 | 60 | 77 | M6 | 3.5 | 7 | HM31 76 | MS31 76 | 61.700 |
| HOH 3180 | 380 | 272 | 520 | 62 | 82 | M6 | 3.5 | 7 | HM31 80 | MS31 80 | 70.600 |
| HOH 3184 | 400 | 304 | 540 | 70 | 90 | M6 | 3.5 | 7 | HM31 84 | MS31 84 | 84.200 |
| HOH 3188 | 410 | 307 | 560 | 70 | 90 | M8 | 6.5 | 12 | HM31 88 | MS31 88 | 104.000 |
| HOH 3192 | 430 | 326 | 580 | 75 | 95 | M8 | 6.5 | 12 | HM31 92 | MS31 92 | 116.000 |
| HOH 3196 | 450 | 335 | 620 | 75 | 95 | M8 | 6.5 | 12 | HM31 96 | MS31 96 | 133.000 |
| HOH31/500 | 470 | 356 | 630 | 80 | 100 | M8 | 6.5 | 12 | HM31 100 | MS31 100 | 143.000 |

• Indo Steel adapter sleeves are supplied complete with lock nuts and lock washers or lock plates.



Hydraullic Adapter Sleeves

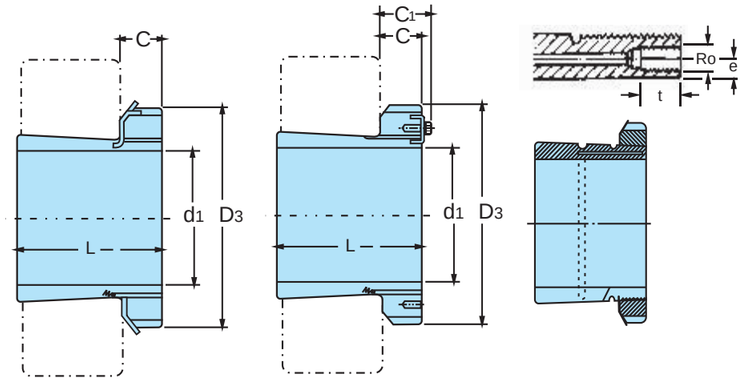


## HOH 30

TAPER 1:12

| Hydraulic Adapter Sleeves No. | d1 mm | L mm | D3 mm | C mm | C1 mm | RO | e mm | t mm | Lock Nuts | Lock Washers and Lock Platea | Weight Kg |
|---|---|---|---|---|---|---|---|---|---|---|---|
| HOH 3032 | 140 | 93 | 190 | 28 | - | M6 | 4.0 | 7 | KM 32 | MB 32 | 5.210 |
| HOH 3034 | 150 | 101 | 200 | 29 | - | M6 | 4.0 | 7 | KM 34 | MB 34 | 5.990 |
| HOH 3036 | 160 | 109 | 210 | 30 | - | M6 | 4.0 | 7 | KM 36 | MB 36 | 6.830 |
| HOH 3038 | 170 | 112 | 220 | 31 | - | M6 | 4.0 | 7 | KM 38 | MB 38 | 7.450 |
| HOH 3040 | 180 | 120 | 240 | 32 | - | M6 | 4.0 | 7 | KM 40 | MB 40 | 9.190 |
| HOH 3044 | 200 | 126 | 260 | 32 | 41 | M6 | 4.0 | 7 | HM31 44 | MS31 44 | ###### |
| HOH 3048 | 220 | 133 | 290 | 34 | 46 | M6 | 4.0 | 7 | HM31 48 | MS31 48 | ###### |
| HOH 3052 | 240 | 145 | 310 | 34 | 46 | M6 | 4.0 | 7 | HM31 52 | MS31 52 | ###### |
| HOH 3056 | 260 | 152 | 330 | 38 | 50 | M6 | 4.0 | 7 | HM31 56 | MS31 56 | ###### |
| HOH 3060 | 280 | 168 | 360 | 42 | 54 | M6 | 4.0 | 7 | HM31 60 | MS31 60 | ###### |
| HOH 3064 | 300 | 171 | 380 | 42 | 55 | M6 | 3.5 | 7 | HM31 64 | MS31 64 | ###### |
| HOH 3068 | 320 | 187 | 400 | 45 | 58 | M6 | 3.5 | 7 | HM31 68 | MS31 68 | ###### |
| HOH 3072 | 340 | 188 | 420 | 45 | 58 | M6 | 3.5 | 7 | HM31 72 | MS31 72 | ###### |
| HOH 3076 | 360 | 193 | 450 | 48 | 62 | M6 | 3.5 | 7 | HM31 76 | MS31 76 | ###### |
| HOH 3080 | 380 | 210 | 470 | 52 | 66 | M6 | 3.5 | 7 | HM31 80 | MS31 80 | ###### |
| HOH 3084 | 400 | 212 | 490 | 52 | 66 | M8 | 3.5 | 7 | HM31 84 | MS31 84 | ###### |
| HOH 3088 | 410 | 228 | 520 | 60 | 77 | M8 | 6.5 | 12 | HM31 88 | MS31 88 | ###### |
| HOH 3092 | 430 | 234 | 540 | 60 | 77 | M8 | 6.5 | 12 | HM31 92 | MS31 92 | ###### |
| HOH 3096 | 450 | 237 | 560 | 60 | 77 | M8 | 6.5 | 12 | HM31 96 | MS31 96 | ###### |
| HOH30/500 | 470 | 247 | 580 | 68 | 85 | M8 | 6.5 | 12 | HM31 100 | MS31 100 | ###### |

• Indo Steel adapter sleeves are supplied complete with lock nuts and lock washers or lock plates.

# Hydraullic Adapter Sleeves

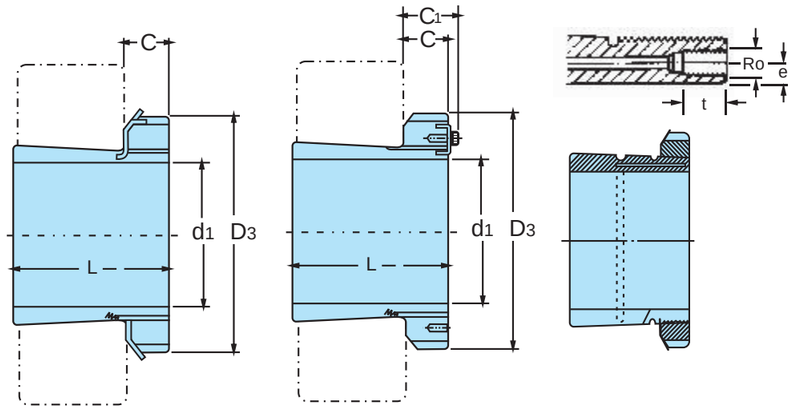


## HOH 39

TAPER 1:12

| Hydraulic Adapter Sleeves No. | d1 mm | L mm | D3 mm | C mm | C1 mm | RO | e mm | t mm | Lock Nuts | Lock Washers and Lock Platea | Weight Kg |
|---|---|---|---|---|---|---|---|---|---|---|---|
| HOH 3936 | 160 | 87 | 210 | 29.5 | - | M6 | 4.0 | 7 | KM 36 | MB 36 | 5.700 |
| HOH 3938 | 170 | 89 | 220 | 30.5 | - | M6 | 4.0 | 7 | KM 38 | MB 38 | 6.190 |
| HOH 3940 | 180 | 98 | 240 | 31.5 | - | M6 | 4.0 | 7 | KM 40 | MB 40 | 7.890 |
| HOH 3944 | 200 | 96 | 260 | 32 | 41 | M6 | 4.0 | 7 | HM31 44 | MS31 44 | 8.160 |
| HOH 3948 | 220 | 101 | 290 | 34 | 46 | M6 | 4.0 | 7 | HM31 48 | MS31 48 | 10.700 |
| HOH 3952 | 240 | 116 | 310 | 34 | 46 | M6 | 4.0 | 7 | HM31 52 | MS31 52 | 12.800 |
| HOH 3956 | 260 | 121 | 330 | 38 | 50 | M6 | 4.0 | 7 | HM31 56 | MS31 56 | 14.800 |
| HOH 3960 | 280 | 140 | 360 | 42 | 54 | M6 | 4.0 | 7 | HM31 60 | MS31 60 | 19.800 |
| HOH 3964 | 300 | 140 | 380 | 42 | 55 | M6 | 3.5 | 7 | HM31 64 | MS31 64 | 21.000 |
| HOH 3968 | 320 | 144 | 400 | 45 | 58 | M6 | 3.5 | 7 | HM31 68 | MS31 68 | 23.500 |
| HOH 3972 | 340 | 144 | 420 | 45 | 58 | M6 | 3.5 | 7 | HM31 72 | MS31 72 | 24.200 |
| HOH 3976 | 360 | 164 | 450 | 48 | 62 | M6 | 3.5 | 7 | HM31 76 | MS31 76 | 31.500 |
| HOH 3980 | 380 | 168 | 470 | 52 | 66 | M6 | 3.5 | 7 | HM31 80 | MS31 80 | 35.000 |
| HOH 3984 | 400 | 168 | 490 | 52 | 66 | M8 | 3.5 | 7 | HM31 84 | MS31 84 | 36.600 |
| HOH 3988 | 410 | 189 | 520 | 60 | 77 | M8 | 6.5 | 12 | HM31 88 | MS31 88 | 57.300 |
| HOH 3992 | 430 | 189 | 540 | 60 | 77 | M8 | 6.5 | 12 | HM31 92 | MS31 92 | 59.900 |
| HOH 3996 | 450 | 200 | 560 | 60 | 77 | M8 | 6.5 | 12 | HM31 96 | MS31 96 | 64.900 |
| HOH 39/500 | 470 | 208 | 580 | 68 | 85 | M8 | 6.5 | 12 | HM31 100 | MS31 100 | 73.100 |

• Indo Steel adapter sleeves are supplied complete with lock nuts and lock washers or lock plates.



# Withdrawal Sleeves

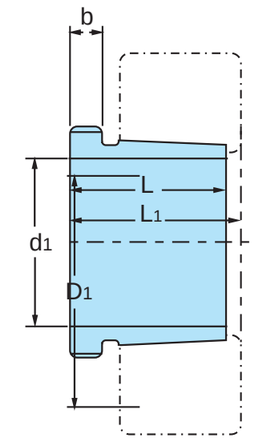


## AH 2

TAPER 1:12

| Withdrawal Sleeves No. | d1 mm | L mm | L1 mm | b mm | Thread D1 mm | Appropriate Withdrawal Nut No. | Weight Kg |
|---|---|---|---|---|---|---|---|
| AH208 | 35 | 25 | 27 | 6 | M 45 x 1.5 | KM 09 | 0.174 |
| AH209 | 40 | 26 | 29 | 6 | M 50 x 1.5 | KM 10 | 0.227 |
| AH210 | 45 | 28 | 31 | 7 | M 55 x 2 | KM 11 | 0.740 |
| AH211 | 50 | 29 | 32 | 7 | M 60 x 2 | KM 12 | 0.308 |
| AH212 | 55 | 32 | 35 | 8 | M 65 x 2 | KM 13 | 0.346 |
| AH213 | 60 | 32.5 | 36 | 8 | M 75 x 2 | KM 15 | 0.401 |
| AH214 | 65 | 33.5 | 37 | 8 | M 80 x 2 | KM 16 | 0.593 |
| AH215 | 70 | 34.5 | 38 | 8 | M 85 x 2 | KM 17 | 0.707 |
| AH216 | 75 | 35.5 | 39 | 8 | M 90 x 2 | KM 18 | 0.882 |
| AH217 | 80 | 38.5 | 42 | 9 | M 95 x 2 | KM 19 | 1.020 |
| AH218 | 85 | 40 | 44 | 9 | M 100 x 2 | KM 20 | 1.190 |
| AH219 | 90 | 43 | 47 | 10 | M 105 x 2 | KM 21 | 1.370 |
| AH220 | 95 | 45 | 49 | 10 | M 110 x 2 | KM 22 | 1.490 |
| AH222 | 105 | 50 | 54 | 11 | M 120 x 2 | KM 24 | 1.930 |

• Dimension L1 decreases as the withdrawal sleeve is driven in during mounting.

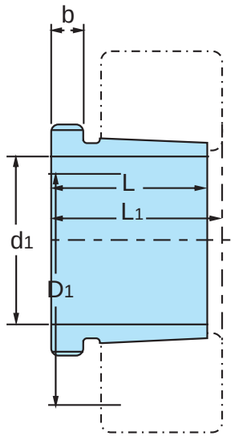


## AH 3

TAPER 1:12

| Withdrawal Sleeves No. | d1 mm | L mm | L1 mm | b mm | Thread D1 mm | Appropriate Withdrawal Nut No. | Weight Kg |
|---|---|---|---|---|---|---|---|
| AH308 | 35 | 29 | 32 | 6 | M 45 x 1.5 | KM 09 | 0.090 |
| AH309 | 40 | 31 | 34 | 6 | M 50 x 1.5 | KM 10 | 0.109 |
| AHX310 | 45 | 35 | 38 | 7 | M 55 x 2 | KM 11 | 0.137 |
| AHX311 | 50 | 37 | 40 | 7 | M 60 x 2 | KM 12 | 0.161 |
| AH312 | 55 | 40 | 43 | 8 | M 65 x 2 | KM 13 | 0.189 |
| AH313 | 60 | 42 | 45 | 8 | M 75 x 2 | KM 15 | 0.253 |
| AH314 | 65 | 43 | 47 | 8 | M 80 x 2 | KM 16 | 0.280 |
| AH315 | 70 | 45 | 49 | 8 | M 85 x 2 | KM 17 | 0.313 |
| AH316 | 75 | 48 | 52 | 8 | M 90 x 2 | KM 18 | 0.365 |
| AHX317 | 80 | 52 | 56 | 9 | M 95 x 2 | KM 19 | 0.429 |
| AHX318 | 85 | 53 | 57 | 9 | M 100 x 2 | KM 20 | 0.461 |
| AHX319 | 90 | 57 | 61 | 10 | M 105 x 2 | KM 21 | 0.532 |
| AHX320 | 95 | 59 | 63 | 10 | M 110 x 2 | KM 22 | 0.582 |
| AHX322 | 105 | 63 | 67 | 12 | M 120 x 2 | KM 24 | 0.663 |

- Dimension L1 decreases as the withdrawal sleeve is driven in during mounting.
- M means metric thread. Tr means 30', trapezoid and the digits are outside diameter of thread and pitch.

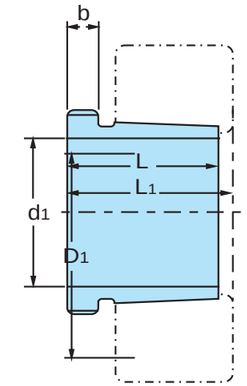


## AH 23

TAPER 1:12

| Withdrawal Sleeves No. | d1 mm | L mm | L1 mm | b mm | Thread D1 mm | Appropriate Withdrawal Nut No. | Weight Kg |
|---|---|---|---|---|---|---|---|
| AH2308 | 35 | 40 | 43 | 7 | M 45 x 1.5 | KM 09 | 0.128 |
| AH2309 | 40 | 44 | 47 | 7 | M 50 x 1.5 | KM 10 | 0.164 |
| AHX2310 | 45 | 50 | 53 | 9 | M 55 x 2 | KM 11 | 0.209 |
| AHX2311 | 50 | 54 | 57 | 10 | M 60 x 2 | KM 12 | 0.253 |
| AHX2312 | 55 | 58 | 61 | 11 | M 65 x 2 | KM 13 | 0.297 |
| AH2313 | 60 | 61 | 64 | 12 | M 75 x 2 | KM 15 | 0.395 |
| AHX2314 | 65 | 64 | 68 | 12 | M 80 x 2 | KM 16 | 0.466 |
| AHX2315 | 70 | 68 | 72 | 12 | M 85 x 2 | KM 17 | 0.534 |
| AHX2316 | 75 | 71 | 75 | 12 | M 90 x 2 | KM 18 | 0.597 |
| AHX2317 | 80 | 74 | 78 | 13 | M 95 x 2 | KM 19 | 0.670 |
| AHX2318 | 85 | 79 | 83 | 14 | M 100 x 2 | KM 20 | 0.779 |
| AHX2319 | 90 | 85 | 89 | 16 | M 105 x 2 | KM 21 | 0.886 |
| AHX2320 | 95 | 90 | 94 | 16 | M 110 x 2 | KM 22 | 0.998 |
| AHX2322 | 105 | 98 | 102 | 16 | M 125 x 2 | KM 25 | 1.350 |
| AHX2324 | 115 | 105 | 109 | 17 | M 135 x 2 | KM 27 | 1.600 |
| AHX2326 | 125 | 115 | 119 | 19 | M 145 x 2 | KM 29 | 1.970 |
| AHX2328 | 135 | 125 | 130 | 20 | M 155 x 2 | KM 31 | 2.330 |
| AHX2330 | 145 | 135 | 140 | 24 | M 165 x 2 | KM 33 | 2.820 |
| AH2332 | 150 | 140 | 146 | 24 | M 180 x 3 | KM 36 | 4.720 |
| AH2334 | 160 | 146 | 152 | 24 | M 190 x 3 | KM 38 | 5.250 |
| AH2336 | 170 | 154 | 160 | 26 | M 200 x 3 | KM 40 | 5.830 |
| AH2338 | 180 | 160 | 167 | 26 | M 210 x 4 | HM 42 | 6.630 |
| AH2340 | 190 | 170 | 177 | 30 | M 220 x 4 | HM 44 | 7.540 |
| AH2344 | 200 | 181 | 189 | 30 | M 240 x 4 | HM 48 | 13.500 |
| AH2348 | 220 | 189 | 197 | 30 | M 260 x 4 | HM 52 | 15.500 |
| AH2352 | 240 | 205 | 213 | 30 | M 290 x 4 | HM 58 | 19.600 |
| AH2356 | 260 | 212 | 220 | 30 | M 310 x 5 | HM 62 | 21.600 |

- Dimension L1 decreases as the withdrawal sleeve is driven in during mounting.
- M means metric thread. Tr means 30', trapezoid and the digits are outside diameter of thread and pitch.

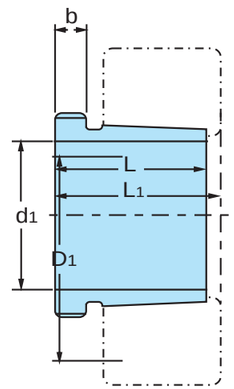


## AH 23

TAPER 1:12

| Withdrawal Sleeves No. | d1 mm | L mm | L1 mm | b mm | Thread D1 mm | Appropriate Withdrawal Nut No. | Weight Kg |
|---|---|---|---|---|---|---|---|
| AHX3120 | 95 | 64 | 68 | 11 | M 110 x 2 | KM 22 | 0.650 |
| AHX3122 | 105 | 68 | 72 | 11 | M 125 x 2 | KM 25 | 0.760 |
| AHX3124 | 115 | 75 | 79 | 12 | M 135 x 2 | KM 27 | 0.950 |
| AHX3126 | 125 | 78 | 82 | 12 | M 145 x 2 | KM 29 | 1.080 |
| AHX3128 | 135 | 83 | 88 | 14 | M 155 x 2 | KM 31 | 1.280 |
| AHX3130 | 145 | 96 | 101 | 15 | M 165 x 2 | KM 33 | 1.790 |
| AH3132 | 150 | 103 | 108 | 16 | M 180 x 3 | KM 36 | 3.210 |
| AH3134 | 160 | 104 | 109 | 16 | M 190 x 3 | KM 38 | 3.400 |
| AH3136 | 170 | 116 | 122 | 19 | M 200 x 3 | KM 40 | 4.220 |
| AH3138 | 180 | 125 | 131 | 20 | M 210 x 4 | HM 42 | 4.890 |
| AH3140 | 190 | 134 | 140 | 21 | M 220 x 4 | HM 44 | 5.490 |
| AH3144 | 200 | 145 | 151 | 23 | M 240 x 4 | HM 48 | 10.400 |
| AH3148 | 220 | 154 | 161 | 25 | M 260 x 4 | HM 52 | 12.000 |
| AH3152 | 240 | 172 | 179 | 26 | M 290 x 4 | HM 58 | 16.200 |
| AH3156 | 260 | 175 | 183 | 28 | M 310 x 5 | HM 62 | 17.500 |
| AH3160 | 280 | 192 | 200 | 30 | M 330 x 5 | HM 66 | 20.800 |
| AH3164 | 300 | 209 | 217 | 31 | M 350 x 5 | HM 70 | 24.500 |
| AH3168 | 320 | 225 | 234 | 33 | M 370 x 5 | HM 74 | 29.000 |
| AH3172 | 340 | 229 | 238 | 35 | M 400 x 5 | HM 80 | 33.000 |
| AH3176 | 360 | 232 | 242 | 36 | M 420 x 5 | HM 84 | 35.700 |
| AH3180 | 380 | 240 | 250 | 38 | M 440 x 5 | HM 88 | 39.700 |
| AH3184 | 400 | 266 | 276 | 40 | M 460 x 5 | HM 92 | 46.500 |
| AHX3188 | 420 | 270 | 281 | 42 | M 480 x 5 | HM 96 | 49.800 |
| AHX3192 | 440 | 285 | 296 | 43 | M 510 x 6 | HM 102 | 57.900 |
| AHX3196 | 460 | 295 | 307 | 45 | M 530 x 6 | HM 106 | 63.100 |
| AHX31/500 | 480 | 313 | 325 | 47 | M 550 x 6 | HM 110 | 70.900 |

- Dimension L1 decreases as the withdrawal sleeve is driven in during mounting.
- M means metric thread. Tr means 30’, trapezoid and the digits are outside diameter of thread and pitch.

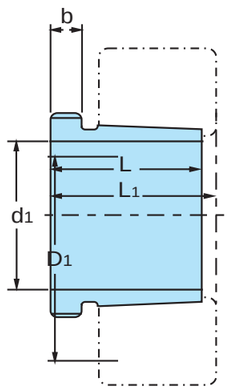


## AH 32

TAPER 1:12

| Withdrawal Sleeves No. | d1 mm | L mm | L1 mm | b mm | Thread D1 mm | Appropriate Withdrawal Nut No. | Weight Kg |
|---|---|---|---|---|---|---|---|
| AHX3218 | 85 | 63 | 67 | 10 | M 100 x 2 | KM 20 | 0.576 |
| AHX3220 | 95 | 73 | 77 | 11 | M 110 x 2 | KM 22 | 0.767 |
| AHX3222 | 105 | 82 | 86 | 11 | M 125 x 2 | KM 25 | 1.040 |
| AHX3224 | 115 | 90 | 94 | 13 | M 135 x 2 | KM 27 | 1.300 |
| AHX3226 | 125 | 98 | 102 | 15 | M 145 x 2 | KM 29 | 1.580 |
| AHX3228 | 135 | 104 | 109 | 15 | M 155 x 2 | KM 31 | 1.840 |
| AHX3230 | 145 | 114 | 119 | 17 | M 165 x 2 | KM 33 | 2.220 |
| AH3232 | 150 | 124 | 130 | 20 | M 180 x 3 | KM 36 | 4.080 |
| AH3234 | 160 | 134 | 140 | 24 | M 190 x 3 | KM 38 | 4.800 |
| AH3236 | 170 | 140 | 146 | 24 | M 200 x 3 | KM 40 | 5.320 |
| AH3238 | 180 | 145 | 152 | 25 | M 210 x 3 | HM 42 | 5.900 |
| AH3240 | 190 | 153 | 160 | 25 | M 220 x 4 | HM 44 | 6.680 |
| AH3260 | 280 | 228 | 236 | 34 | M 330 x 5 | HM 66 | 26.000 |
| AH3264 | 300 | 246 | 254 | 36 | M 350 x 5 | HM 70 | 30.600 |
| AH3268 | 320 | 264 | 273 | 38 | M 370 x 5 | HM 74 | 35.800 |
| AH3272 | 340 | 274 | 283 | 40 | M 400 x 5 | HM 80 | 41.600 |
| AH3276 | 360 | 284 | 294 | 42 | M 420 x 5 | HM 84 | 46.300 |
| AH3280 | 380 | 302 | 312 | 44 | M 440 x 5 | HM 88 | 52.500 |
| AHX3284 | 400 | 321 | 331 | 46 | M 460 x 5 | HM 92 | 59.700 |
| AHX3288 | 420 | 330 | 341 | 48 | M 480 x 5 | HM 96 | 64.800 |
| AHX3292 | 440 | 349 | 360 | 50 | M 510 x 6 | HM 102 | 75.200 |
| AHX3296 | 460 | 364 | 376 | 52 | M 530 x 6 | HM 106 | 83.100 |
| AHX32/500 | 480 | 393 | 405 | 54 | M 550 x 6 | HM 110 | 94.700 |

- Dimension L1 decreases as the withdrawal sleeve is driven in during mounting.
- M means metric thread. Tr means 30’, trapezoid and the digits are outside diameter of thread and pitch.

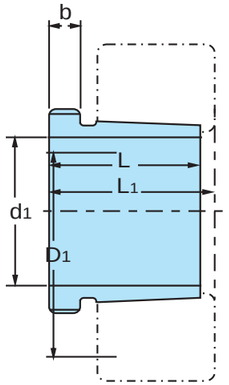


## AH 22

TAPER 1:12

| Withdrawal Sleeves No. | d1 mm | L mm | L1 mm | b mm | Thread D1 mm | Appropriate Withdrawal Nut No. | Weight Kg |
|---|---|---|---|---|---|---|---|
| AH2236 | 170 | 105 | 110 | 17 | M 200 x 3 | HM 40 | 3.730 |
| AH2238 | 180 | 112 | 117 | 18 | M 210 x 4 | HM 42 | 4.250 |
| AH2240 | 190 | 118 | 123 | 19 | M 220 x 4 | HM 44 | 4.680 |
| AH2244 | 200 | 130 | 136 | 20 | M 240 x 4 | HM 48 | 9.100 |
| AH2248 | 220 | 144 | 150 | 21 | M 260 x 4 | HM 52 | 11.100 |
| AH2252 | 240 | 155 | 161 | 23 | M 290 x 4 | HM 58 | 14.000 |
| AH2256 | 260 | 155 | 163 | 24 | M 310 x 5 | HM 62 | 15.200 |
| AH2260 | 280 | 170 | 178 | 26 | M 330 x 5 | HM 66 | 18.100 |
| AH2264 | 300 | 180 | 190 | 27 | M 350 x 5 | HM 70 | 20.200 |

- Dimension L1 decreases as the withdrawal sleeve is driven in during mounting.
- M means metric thread. Tr means 30’, trapezoid and the digits are outside diameter of thread and pitch.

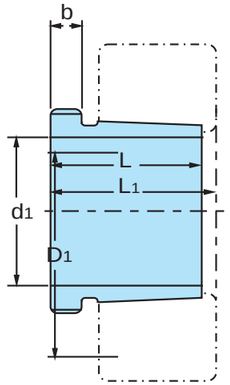


## AH 30

TAPER 1:12

| Withdrawal Sleeves No. | d1 mm | L mm | L1 mm | b mm | Thread D1 mm | Appropriate Withdrawal Nut No. | Weight Kg |
|---|---|---|---|---|---|---|---|
| AH3024 | 115 | 60 | 64 | 13 | M 130 x 2 | KM 26 | 0.750 |
| AH3026 | 125 | 67 | 71 | 14 | M 140 x 2 | KM 28 | 0.930 |
| AH3028 | 135 | 68 | 73 | 14 | M 150 x 2 | KM 30 | 1.010 |
| AH3030 | 145 | 72 | 77 | 15 | M 160 x 2 | KM 32 | 1.150 |
| AH3032 | 150 | 77 | 82 | 16 | M 170 x 3 | KM 34 | 2.060 |
| AH3034 | 160 | 85 | 90 | 17 | M 180 x 3 | KM 36 | 2.430 |
| AH3036 | 170 | 92 | 98 | 17 | M 190 x 3 | KM 38 | 2.810 |
| AH3038 | 180 | 96 | 102 | 18 | Tr 205 x 4 | HML 41 | 2.320 |
| AH3040 | 190 | 102 | 108 | 19 | Tr 215 x 4 | HML 43 | 3.800 |
| AH3044 | 200 | 111 | 117 | 20 | Tr 235 x 4 | HML 47 | 7.400 |
| AH3048 | 220 | 116 | 123 | 21 | Tr 260 x 4 | HML 52 | 8.750 |
| AH3052 | 240 | 128 | 135 | 23 | Tr 280 x 4 | HML 56 | 10.700 |
| AH3056 | 260 | 131 | 139 | 24 | Tr 300 x 5 | HML 60 | 12.000 |
| AH3060 | 280 | 145 | 153 | 26 | Tr 320 x 5 | HML 64 | 14.400 |
| AH3064 | 300 | 149 | 157 | 27 | Tr 345 x 5 | HML 69 | 16.000 |
| AH3068 | 320 | 162 | 171 | 28 | Tr 365 x 5 | HML 73 | 19.500 |
| AH3072 | 340 | 167 | 176 | 30 | Tr 385 x 5 | HML 77 | 21.000 |
| AH3076 | 360 | 170 | 180 | 31 | Tr 410 x 5 | HML 82 | 23.200 |
| AH3080 | 380 | 183 | 193 | 33 | Tr 430 x 5 | HML 86 | 27.300 |
| AH3084 | 400 | 186 | 196 | 34 | Tr 450 x 5 | HML 90 | 29.000 |
| AH3088 | 420 | 194 | 205 | 35 | Tr 470 x 5 | HML 94 | 32.000 |
| AH3092 | 440 | 202 | 213 | 37 | Tr 490 x 6 | HML 98 | 35.200 |
| AH3096 | 460 | 205 | 217 | 38 | Tr 520 x 6 | HML 104 | 39.200 |
| AH30/500 | 480 | 209 | 221 | 40 | Tr 540 x 6 | HML 108 | 42.500 |

- Dimension L1 decreases as the withdrawal sleeve is driven in during mounting.
- M means metric thread. Tr means 30’, trapezoid and the digits are outside diameter of thread and pitch.

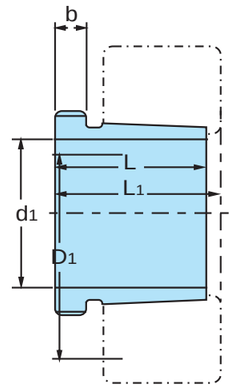


## AH 240

TAPER 1:30

| Withdrawal Sleeves No. | d1 mm | L mm | L1 mm | b mm | Thread D1 mm | Appropriate Withdrawal Nut No. | Weight Kg |
|---|---|---|---|---|---|---|---|
| AH24024 | 115 | 73 | 82 | 13 | M 125 x 2 | KM 25 | 0.650 |
| AH24026 | 125 | 83 | 93 | 14 | M 135 x 2 | KM 27 | 0.840 |
| AH24028 | 135 | 83 | 93 | 14 | M 145 x 2 | KM 29 | 0.910 |
| AH24030 | 145 | 90 | 101 | 15 | M 155 x 2 | KM 31 | 1.040 |
| AH24032 | 150 | 95 | 106 | 15 | M 170 x 3 | KM 34 | 2.330 |
| AH24034 | 160 | 106 | 117 | 16 | M 180 x 3 | KM 36 | 2.800 |
| AH24036 | 170 | 116 | 127 | 16 | M 190 x 3 | KM 38 | 3.100 |
| AH24038 | 180 | 118 | 131 | 18 | M 200 x 3 | HM 40 | 3.500 |
| AH24040 | 190 | 127 | 140 | 18 | Tr 210 x 4 | HM 42 | 3.930 |
| AH24044 | 200 | 138 | 152 | 20 | Tr 230 x 4 | HM 46 | 8.250 |
| AH24048 | 220 | 138 | 153 | 20 | Tr 250 x 4 | HM 50 | 9.000 |
| AH24052 | 240 | 162 | 178 | 22 | Tr 270 x 4 | HM 54 | 11.800 |
| AH24056 | 260 | 162 | 179 | 22 | Tr 290 x 5 | HM 58 | 12.800 |
| AH24060 | 280 | 184 | 202 | 24 | Tr 310 x 5 | HM 62 | 15.500 |
| AH24064 | 300 | 184 | 202 | 24 | Tr 330 x 5 | HM 66 | 16.600 |
| AH24068 | 320 | 206 | 225 | 26 | Tr 360x 5 | HML 72 | 21.700 |
| AH24072 | 340 | 206 | 226 | 26 | Tr 380 x 5 | HML 76 | 22.700 |
| AH24076 | 360 | 208 | 228 | 28 | Tr 400 x 5 | HML 80 | 23.700 |
| AH24080 | 380 | 228 | 248 | 28 | Tr 420 x 5 | HML 84 | 27.100 |
| AH24084 | 400 | 230 | 252 | 30 | Tr 440 x 5 | HML 88 | 29.000 |
| AH24088 | 420 | 242 | 264 | 30 | Tr 460 x 5 | HML 92 | 31.900 |
| AH24092 | 440 | 250 | 273 | 32 | Tr 480 x 6 | HML 96 | 34.700 |
| AH24096 | 460 | 250 | 273 | 32 | Tr 500 x 6 | HML 100 | 36.600 |
| AH240/500 | 480 | 256 | 276 | 35 | Tr 530 x 6 | HML 106 | 41.700 |

- Dimension L1 decreases as the withdrawal sleeve is driven in during mounting.
- M means metric thread. Tr means 240', trapezoid and the digits are outside diameter of thread and pitch.

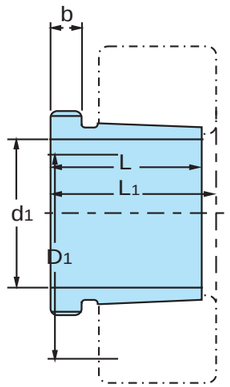


## AH 241

TAPER 1:30

| Withdrawal Sleeves No. | d1 mm | L mm | L1 mm | b mm | Thread D1 mm | Appropriate Withdrawal Nut No. | Weight Kg |
|---|---|---|---|---|---|---|---|
| AH 24122 | 105 | 82 | 91 | 13 | M 115 x 2 | KM 23 | 0.73 |
| AH 24124 | 115 | 93 | 102 | 13 | M 130 x 2 | KM 26 | 1.000 |
| AH 24126 | 125 | 94 | 104 | 14 | M 140 x 2 | KM 28 | 1.110 |
| AH 24128 | 135 | 99 | 109 | 14 | M 150 x 2 | KM 30 | 1.250 |
| AH 24130 | 145 | 115 | 126 | 15 | M 160 x 2 | KM 32 | 1.560 |
| AH 24132 | 150 | 124 | 135 | 15 | M 170 x 3 | KM 34 | 3.000 |
| AH 24134 | 160 | 125 | 136 | 16 | M 180 x 3 | KM 36 | 3.210 |
| AH 24136 | 170 | 134 | 145 | 16 | M 190 x 3 | KM 38 | 3.680 |
| AH 24138 | 180 | 146 | 159 | 18 | M 200 x 3 | KM 40 | 4.280 |
| AH 24140 | 190 | 158 | 171 | 18 | Tr 210 x 4 | HM 42 | 5.100 |
| AH 24144 | 200 | 170 | 184 | 20 | Tr 230 x 4 | HM 46 | 10.200 |
| AH 24148 | 220 | 180 | 195 | 20 | Tr 260 x 4 | HM 52 | 12.500 |
| AH 24152 | 240 | 202 | 218 | 22 | Tr 280 x 4 | HM 56 | 15.400 |
| AH 24156 | 260 | 202 | 219 | 22 | Tr 300 x 5 | HM 60 | 16.300 |
| AH 24160 | 280 | 224 | 242 | 24 | Tr 320 x 5 | HM 64 | 19.500 |
| AH 24164 | 300 | 242 | 260 | 24 | Tr 340 x 5 | HM 68 | 21.400 |
| AH 24168 | 320 | 269 | 288 | 26 | Tr 360 x 5 | HM 72 | 27.100 |
| AH 24172 | 340 | 269 | 289 | 26 | Tr 380 x 5 | HM 76 | 29.600 |
| AH 24176 | 360 | 271 | 291 | 28 | Tr 400 x 5 | HM 80 | 31.300 |
| AH 24180 | 380 | 278 | 298 | 28 | Tr 420 x 5 | HM 84 | 34.300 |
| AH 24184 | 400 | 310 | 332 | 30 | Tr 440 x 5 | HM 88 | 40.300 |
| AH 24188 | 420 | 310 | 332 | 30 | Tr 460 x 5 | HM 92 | 42.300 |
| AH 24192 | 440 | 332 | 355 | 32 | Tr 480 x 6 | HM 96 | 47.600 |
| AH 24196 | 460 | 340 | 363 | 32 | Tr 500 x 6 | HM 100 | 52.700 |
| AH 241/500 | 480 | 360 | 383 | 35 | Tr 530 x 6 | HM 106 | 59.100 |

- Dimension L1 decreases as the withdrawal sleeve is driven in during mounting.
- M means metric thread. Tr means 240', trapezoid and the digits are outside diameter of thread and pitch.

# Withdrawal Sleeves

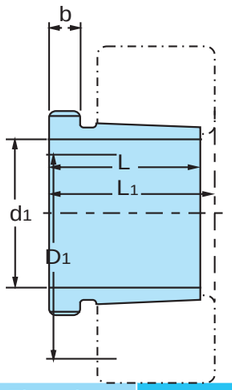


AH 39

TAPER 1:12

| Withdrawal Sleeves No. | d1 mm | L mm | L1 mm | b mm | Thread D1 mm | Appropriate Withdrawal Nut No. | Weight Kg |
|---|---|---|---|---|---|---|---|
| AH 3936 | 170 | 66 | 71 | 13 | M 190 x 3 | KM 38 | 1.910 |
| AH 3938 | 180 | 66 | 71 | 13 | M 200 x 3 | KM 40 | 2.020 |
| AH 3940 | 190 | 77 | 83 | 16 | Tr 210 x 4 | HM 42 | 2.619 |
| AH 3944 | 200 | 77 | 83 | 16 | Tr 230 x 4 | HM 46 | 4.830 |
| AH 3948 | 220 | 77 | 83 | 16 | Tr 250 x 4 | HM 50 | 5.290 |
| AH 3952 | 240 | 94 | 100 | 18 | Tr 270 x 4 | HM 54 | 7.060 |
| AH 3956 | 260 | 94 | 100 | 18 | Tr 290 x 5 | HM 58 | 7.700 |
| AH 3960 | 280 | 112 | 119 | 21 | Tr 310 x 5 | HM 62 | 10.100 |
| AH 3964 | 300 | 112 | 119 | 21 | Tr 330 x 5 | HM 66 | 10.800 |
| AH 3968 | 320 | 112 | 119 | 21 | Tr 360 x 5 | HM 72 | 12.400 |
| AH 3972 | 340 | 112 | 119 | 21 | Tr 380 x 5 | HM 76 | 13.100 |
| AH 3976 | 360 | 130 | 138 | 22 | Tr 400 x 5 | HM 80 | 15.900 |
| AH 3980 | 380 | 130 | 138 | 22 | Tr 420 x 5 | HM 84 | 17.200 |
| AH 3984 | 400 | 130 | 138 | 22 | Tr 440 x 5 | HM 88 | 18.100 |
| AH 3988 | 420 | 145 | 153 | 25 | Tr 460 x 5 | HM 92 | 21.500 |
| AH 3992 | 440 | 145 | 153 | 25 | Tr 480 x 6 | HM 96 | 22.500 |
| AH 3996 | 460 | 158 | 167 | 28 | Tr 500 x 6 | HM 100 | 26.000 |
| AH 39/500 | 480 | 162 | 172 | 32 | Tr 530 x 6 | HM 106 | 30.100 |

- Dimension L1 decreases as the withdrawal sleeve is driven in during mounting.
- M means metric thread. Tr means 240', trapezoid and the digits are outside diameter of thread and pitch.



# Lock Nuts

# Lock Washers

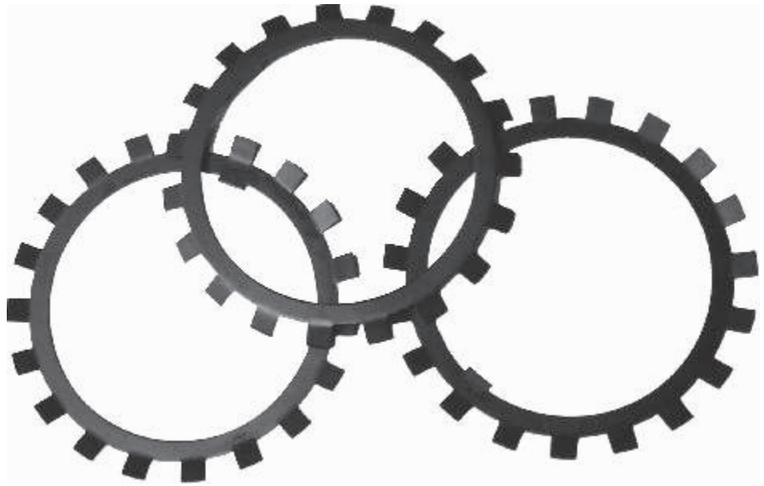

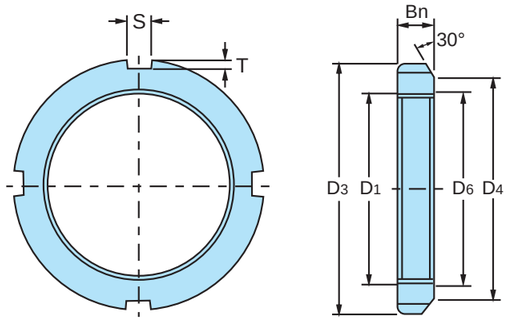


KM
AN

| Lock Nuts No. | D1 Thread | D3 mm | D4 mm | Bn mm | S mm | T mm | D6 mm | Weight Kg | Lock Washers No. |
|---|---|---|---|---|---|---|---|---|---|
| KM00 | M10 x 0.75 | 18 | 13 | 4 | 3 | 2 | 10.5 | 0.005 | MB 00 |
| KM01 | M12 x 1 | 22 | 17 | 4 | 3 | 2 | 12.5 | 0.007 | MB 01 |
| KM02 | M15 x 1 | 25 | 21 | 5 | 4 | 2 | 15.5 | 0.01 | MB 02 |
| KM03 | M17 x 1 | 28 | 24 | 5 | 4 | 2 | 17.5 | 0.013 | MB 03 |
| KM04 | M20 x 1 | 32 | 26 | 6 | 4 | 2 | 20.5 | 0.019 | MB 04 |
| KM05 | M25 x 1.5 | 38 | 32 | 7 | 5 | 2 | 25.8 | 0.025 | MB 05 |
| KM06 | M30 x 1.5 | 45 | 38 | 7 | 5 | 2 | 30.8 | 0.043 | MB 06 |
| KM07 | M35 x 1.5 | 52 | 44 | 8 | 5 | 2 | 35.8 | 0.053 | MB 07 |
| KM08 | M40 x 1.5 | 58 | 50 | 9 | 6 | 2.5 | 40.8 | 0.085 | MB 08 |
| KM09 | M45 x 1.5 | 65 | 56 | 10 | 6 | 2.5 | 45.8 | 0.119 | MB 09 |
| KM10 | M50 x 1.5 | 70 | 61 | 11 | 6 | 2.5 | 50.8 | 0.148 | MB 10 |
| KM11 | M55 x 2 | 75 | 67 | 11 | 7 | 3 | 56 | 0.158 | MB 11 |
| KM12 | M60 x 2 | 80 | 73 | 11 | 7 | 3 | 61 | 0.174 | MB 12 |
| KM13 | M65 x 2 | 85 | 79 | 12 | 7 | 3 | 66 | 0.203 | MB 13 |
| KM14 | M70 x 2 | 92 | 85 | 12 | 8 | 3.5 | 71 | 0.242 | MB 14 |
| KM15 | M75 x 2 | 98 | 90 | 13 | 8 | 3.5 | 76 | 0.287 | MB 15 |
| KM16 | M80 x 2 | 105 | 95 | 15 | 8 | 3.5 | 81 | 0.397 | MB 16 |
| KM17 | M85 x 2 | 110 | 102 | 16 | 8 | 3.5 | 86 | 0.451 | MB 17 |
| KM18 | M90 x 2 | 120 | 108 | 16 | 10 | 4 | 91 | 0.556 | MB 18 |
| KM19 | M95 x 2 | 125 | 113 | 17 | 10 | 4 | 96 | 0.658 | MB 19 |
| KM20 | M100 x 2 | 130 | 120 | 18 | 10 | 4 | 101 | 0.698 | MB 20 |
| KM21 | M105 x 2 | 140 | 126 | 18 | 12 | 5 | 106 | 0.845 | MB 21 |
| KM22 | M110 x 2 | 145 | 133 | 19 | 12 | 5 | 111 | 0.965 | MB 22 |
| KM23 | M115 x 2 | 150 | 137 | 19 | 12 | 5 | 116 | 1.01 | MB 23 |
| KM24 | M120 x 2 | 155 | 138 | 20 | 12 | 5 | 121 | 1.08 | MB 24 |
| KM25 | M125 x 2 | 160 | 148 | 21 | 12 | 5 | 126 | 1.19 | MB 25 |
| KM26 | M130 x 2 | 165 | 149 | 21 | 12 | 5 | 131 | 1.25 | MB 26 |
| KM27 | M135 x 2 | 175 | 160 | 22 | 14 | 6 | 136 | 1.55 | MB 27 |
| KM28 | M140 x 2 | 180 | 160 | 22 | 14 | 6 | 141 | 1.56 | MB 28 |

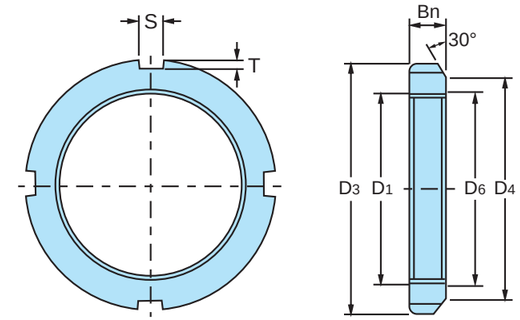


KM
AN

| Lock Nuts No. | D1 Threads | D3 mm | D4 mm | Bn mm | S mm | T mm | D6 mm | Weight Kg | Lock Washers No. |
|---|---|---|---|---|---|---|---|---|---|
| KM29 | M145 x 2.0 | 190 | 171 | 24 | 14 | 6 | 146 | 2.000 | MB 29 |
| KM30 | M150 x 2.0 | 195 | 171 | 24 | 14 | 6 | 151 | 2.030 | MB 30 |
| KM31 | M155 x 3.0 | 200 | 182 | 25 | 16 | 7 | 156.5 | 2.210 | MB 31 |
| KM32 | M160 x 3.0 | 210 | 182 | 25 | 16 | 7 | 161.5 | 2.590 | MB 32 |
| KM33 | M165 x 3.0 | 210 | 193 | 26 | 16 | 7 | 166.5 | 2.430 | MB 33 |
| KM34 | M170 x 3.0 | 220 | 193 | 26 | 16 | 7 | 171.5 | 2.800 | MB 34 |
| KM36 | M180 x 3.0 | 230 | 203 | 27 | 18 | 8 | 181.5 | 3.070 | MB 36 |
| KM38 | M190 x 3.0 | 240 | 214 | 28 | 18 | 8 | 191.5 | 3.390 | MB 38 |
| KM40 | M200 x 3.0 | 250 | 226 | 29 | 18 | 8 | 201.5 | 3.690 | MB 40 |

• M means metric thread and the digits are major diameter of thread and pitch.
NOTE: The speci?cation of KM can be applied for AN.

KML
ANL

| Lock Nuts No. | D1 Threads | D3 mm | D4 mm | Bn mm | S mm | T mm | D6 mm | Weight Kg | Lock Washers No. |
|---|---|---|---|---|---|---|---|---|---|
| KML24 | M120 x 2 | 145 | 133 | 20 | 12 | 5 | 121 | 0.78 | MBL 24 |
| KML26 | M130 x 2 | 155 | 143 | 21 | 12 | 5 | 131 | 0.88 | MBL 26 |
| KML28 | M140 x 2 | 165 | 151 | 22 | 14 | 6 | 141 | 0.99 | MBL 28 |
| KML30 | M150 x 2 | 180 | 164 | 24 | 14 | 6 | 151 | 1.38 | MBL 30 |
| KML32 | M160 x 3 | 190 | 174 | 25 | 16 | 7 | 162 | 1.56 | MBL 32 |
| KML34 | M170x 3 | 200 | 184 | 26 | 16 | 7 | 172 | 1.72 | MBL 34 |
| KML36 | M180 x 3 | 210 | 192 | 27 | 18 | 8 | 182 | 1.95 | MBL 36 |
| KML38 | M190 x 3 | 220 | 202 | 28 | 18 | 8 | 192 | 2.08 | MBL 38 |
| KML40 | M200 x 3 | 240 | 218 | 29 | 18 | 8 | 202 | 2.98 | MBL 40 |

• M means metric thread and the digits are major diameter of thread and pitch.
NOTE: The speci?cation of KML can be applied for ANL.

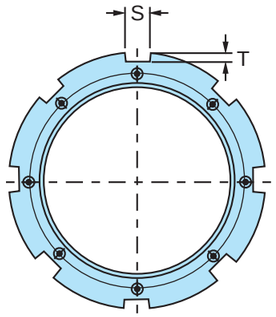


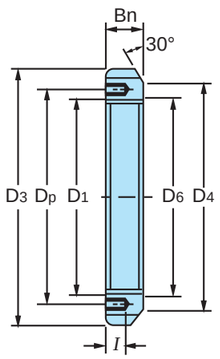


## HM31

| Lock Nuts No. | D1 Threads | D3 mm | D4 mm | S mm | T mm | D6 mm | Bn mm | i mm | Tapped Holes Threats | Dp mm | Suitable Lock plates No. | Weight Kg. |
|---|---|---|---|---|---|---|---|---|---|---|---|---|
| HM3144 | Tr 220 x 4 | 280 | 250 | 20 | 10 | 222 | 32 | 15 | M 8 x 1.25 | 238 | MS3144 | 5.20 |
| HM3148 | Tr 240 x 4 | 300 | 270 | 20 | 10 | 242 | 34 | 15 | M 8 x 1.25 | 258 | MS3148 | 5.95 |
| HM3152 | Tr 260 x 4 | 330 | 300 | 24 | 12 | 262 | 36 | 18 | M 10 x 1.5 | 281 | MS3152 | 8.05 |
| HM3156 | Tr 280 x 4 | 350 | 320 | 24 | 12 | 282 | 38 | 18 | M 10 x 1.5 | 301 | MS3156 | 9.05 |
| HM3160 | Tr 300 x 4 | 380 | 340 | 24 | 12 | 302 | 40 | 18 | M 10 x 1.5 | 326 | MS3160 | 11.80 |
| HM3164 | Tr 320 x 5 | 400 | 360 | 24 | 12 | 323 | 42 | 18 | M 10 x 1.5 | 345 | MS3164 | 13.10 |
| HM3168 | Tr 340 x 5 | 440 | 400 | 28 | 15 | 343 | 55 | 21 | M 12 x 1.75 | 372 | MS3168 | 23.10 |
| HM3172 | Tr 360 x 5 | 460 | 420 | 28 | 15 | 363 | 58 | 21 | M 12 x 1.75 | 392 | MS3172 | 25.10 |
| HM3176 | Tr 380 x 5 | 490 | 450 | 32 | 18 | 383 | 60 | 21 | M 12 x 1.75 | 414 | MS3176 | 30.90 |
| HM3180 | Tr 400 x 5 | 520 | 470 | 32 | 18 | 403 | 62 | 27 | M 16 x 2 | 439 | MS3180 | 36.90 |
| HM3184 | Tr 420 x 5 | 540 | 490 | 32 | 18 | 423 | 70 | 27 | M 16 x 2 | 459 | MS3184 | 43.50 |
| HM3188 | Tr 440 x 5 | 560 | 510 | 36 | 20 | 443 | 70 | 27 | M 16 x 2 | 477 | MS3188 | 45.30 |
| HM3192 | Tr 460 x 5 | 580 | 540 | 36 | 20 | 463 | 75 | 27 | M 16 x 2 | 497 | MS3192 | 50.40 |
| HM3196 | Tr 480 x 5 | 620 | 560 | 36 | 20 | 483 | 75 | 27 | M 16 x 2 | 527 | MS3196 | 62.20 |
| HM31100 | Tr 500 x 5 | 630 | 580 | 40 | 23 | 503 | 80 | 27 | M 16 x 2 | 539 | MS31100 | 63.30 |

• Tr means 30’ thread and the digits are major diameter of thread and pitch.

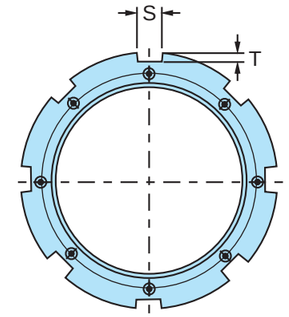


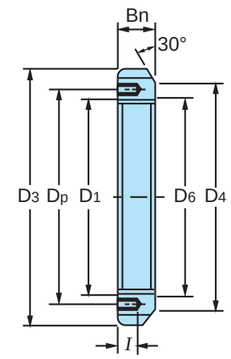


## HM30

| Lock Nuts No. | D1 Threads | D3 mm | D4 mm | S mm | T mm | D6 mm | Bn mm | i mm | Tapped Holes Threads | Dp mm | Suitable Lock plates No. | Weight Kg. |
|---|---|---|---|---|---|---|---|---|---|---|---|---|
| HM3044 | Tr 220 x 4 | 260 | 242 | 20 | 9 | 222 | 30 | 12 | M 6 x 1 | 229 | MS 3044 | 3.09 |
| HM3048 | Tr 240 x 4 | 290 | 270 | 20 | 10 | 242 | 34 | 15 | M 8 x 1.25 | 253 | MS 3048 | 5.16 |
| HM3052 | Tr 260 x 4 | 310 | 290 | 20 | 10 | 262 | 34 | 15 | M 8 x 1.25 | 273 | MS 3052 | 5.67 |
| HM3056 | Tr 280 x 4 | 330 | 310 | 24 | 10 | 282 | 38 | 15 | M 8 x 1.25 | 293 | MS 3056 | 6.78 |
| HM3060 | Tr 300 x 4 | 360 | 336 | 24 | 12 | 302 | 42 | 15 | M 8 x 1.25 | 316 | MS 3060 | 9.62 |
| HM3064 | Tr 320 x 5 | 380 | 356 | 24 | 12 | 322.5 | 42 | 15 | M 8 x 1.25 | 335 | MS 3064 | 9.94 |
| HM3068 | Tr 340 x 5 | 400 | 376 | 24 | 12 | 342.5 | 45 | 15 | M 8 x 1.25 | 355 | MS 30 68 | 11.70 |
| HM3072 | Tr 360 x 5 | 420 | 394 | 28 | 13 | 362.5 | 45 | 15 | M 8 x 1.25 | 374 | MS 3072 | 12.00 |
| HM3076 | Tr 380 x 5 | 450 | 422 | 28 | 14 | 382.5 | 48 | 18 | M 10 x 1.5 | 398 | MS 3076 | 14.90 |
| HM3080 | Tr 400 x 5 | 470 | 442 | 28 | 14 | 402.5 | 52 | 18 | M 10 x 1.5 | 418 | MS 3080 | 16.90 |
| HM3084 | Tr 420 x 5 | 490 | 462 | 32 | 14 | 422.5 | 52 | 18 | M 10 x 1.5 | 438 | MS 3084 | 17.40 |
| HM3088 | Tr 440 x 5 | 520 | 490 | 32 | 15 | 442.5 | 60 | 21 | M 12 x 1.75 | 462 | MS 3088 | 26.20 |
| HM3092 | Tr 460 x 5 | 540 | 510 | 32 | 15 | 462.5 | 60 | 21 | M 12 x 1.75 | 482 | MS 3092 | 29.60 |
| HM3096 | Tr 480 x 5 | 560 | 530 | 36 | 15 | 482.5 | 60 | 21 | M 12 x 1.75 | 502 | MS 3096 | 28.30 |
| HM30100 | Tr 500 x 5 | 580 | 550 | 36 | 15 | 502.5 | 68 | 21 | M 12 x 1.75 | 522 | MS 30100 | 33.60 |

• Tr means 30’ thread and the digits are major diameter of thread and pitch.

# Lock Nuts

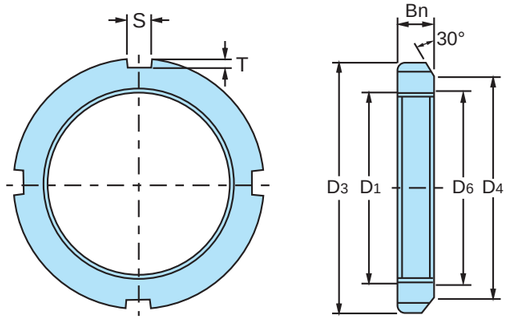


HM
HN

| Lock Nuts No. | D1 Threads | D3 mm | D4 mm | Bn mm | S mm | T mm | D6 mm | Weight Kg |
|---|---|---|---|---|---|---|---|---|
| HM42 | Tr210 x 4 | 270 | 238 | 30 | 20 | 10 | 212 | 4.75 |
| HM44 | Tr220 x 4 | 280 | 250 | 32 | 20 | 10 | 222 | 5.35 |
| HM46 | Tr230 x 4 | 290 | 260 | 34 | 20 | 10 | 232 | 5.80 |
| HM48 | Tr240 x 4 | 300 | 270 | 34 | 20 | 10 | 242 | 6.20 |
| HM50 | Tr250 x 4 | 320 | 290 | 36 | 20 | 10 | 252 | 7.00 |
| HM52 | Tr260 x 4 | 330 | 300 | 36 | 24 | 12 | 262 | 8.55 |
| HM54 | Tr270 x 4 | 340 | 310 | 38 | 24 | 12 | 272 | 9.20 |
| HM56 | Tr280 x 4 | 350 | 320 | 38 | 24 | 12 | 282 | 10.00 |
| HM58 | Tr290 x 4 | 370 | 330 | 40 | 24 | 12 | 292 | 11.80 |
| HM60 | Tr300 x 4 | 380 | 340 | 40 | 24 | 12 | 302 | 12.00 |
| HM62 | Tr310 x 5 | 390 | 350 | 42 | 24 | 12 | 312.5 | 13.40 |
| HM64 | Tr320 x 5 | 400 | 360 | 42 | 24 | 12 | 322.5 | 20.40 |
| HM66 | Tr330 x 5 | 420 | 380 | 52 | 28 | 15 | 332.5 | 24.50 |
| HM68 | Tr340 x 5 | 440 | 400 | 55 | 28 | 15 | 342.5 | 25.20 |
| HM70 | Tr350 x 5 | 450 | 410 | 55 | 28 | 15 | 352.5 | 27.50 |
| HM72 | Tr360 x 5 | 460 | 420 | 58 | 28 | 15 | 362.5 | 28.20 |
| HM74 | Tr370 x 5 | 470 | 430 | 58 | 28 | 15 | 372.5 | 33.50 |
| HM76 | Tr380 x 5 | 490 | 450 | 60 | 32 | 18 | 382.5 | 40.00 |
| HM80 | Tr400 x 5 | 520 | 470 | 62 | 32 | 18 | 402.5 | 46.90 |
| HM84 | Tr420 x 5 | 540 | 490 | 70 | 32 | 18 | 422.5 | 48.50 |
| HM88 | Tr440 x 5 | 560 | 510 | 70 | 36 | 20 | 442.5 | 55.00 |
| HM92 | Tr460 x 5 | 580 | 540 | 75 | 36 | 20 | 462.5 | 67.00 |
| HM96 | Tr480 x 5 | 620 | 560 | 75 | 36 | 20 | 482.5 | 69.00 |
| HM100 | Tr500 x 5 | 630 | 590 | 80 | 40 | 23 | 502.5 | 75.00 |
| HM102 | Tr510 x 6 | 650 | 590 | 80 | 40 | 23 | 513 | 78.00 |
| HM106 | Tr530 x 6 | 670 | 610 | 80 | 40 | 23 | 533 | 92.50 |
| HM110 | Tr550 x 6 | 700 | 640 | 80 | 40 | 23 | 553 | 148.00 |

• Tr means 30’ thread and the digits are major diameter of thread and pitch.
NOTE: The speci?cation of HM can be applied for HN.

# Lock Nuts

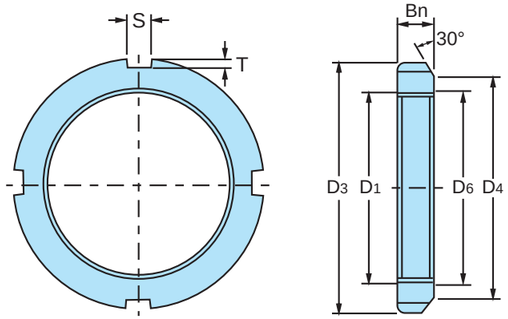


HML
HNL

| Lock Nuts No. | D1 Threads | D3 mm | D4 mm | Bn mm | S mm | T mm | D6 mm | Weight Kg |
|---|---|---|---|---|---|---|---|---|
| HML41 | Tr205 x 4 | 250 | 232 | 30 | 18 | 8 | 207 | 3.43 |
| HML43 | Tr215 x 4 | 260 | 242 | 30 | 20 | 9 | 217 | 3.72 |
| HML47 | Tr235 x 4 | 280 | 262 | 34 | 20 | 9 | 237 | 4.60 |
| HML52 | Tr260 x 4 | 310 | 290 | 34 | 20 | 10 | 262 | 5.80 |
| HML56 | Tr280 x 4 | 330 | 310 | 38 | 24 | 10 | 282 | 6.72 |
| HML60 | Tr300 x 4 | 360 | 336 | 42 | 24 | 12 | 302 | 9.60 |
| HML64 | Tr320 x 5 | 380 | 356 | 42 | 24 | 12 | 322.5 | 10.30 |
| HML69 | Tr345 x 5 | 410 | 384 | 45 | 28 | 13 | 347.5 | 11.50 |
| HML72 | Tr360 x 5 | 420 | 394 | 45 | 28 | 13 | 362.5 | 12.10 |
| HML73 | Tr365 x 5 | 430 | 404 | 48 | 28 | 13 | 367.5 | 14.20 |
| HML76 | Tr380 x 5 | 450 | 422 | 48 | 28 | 14 | 382.5 | 16.00 |
| HML77 | Tr385 x 5 | 450 | 422 | 48 | 28 | 14 | 387.5 | 15.00 |
| HML80 | Tr400 x 5 | 470 | 442 | 52 | 28 | 14 | 402.5 | 18.50 |
| HML82 | Tr410 x 5 | 480 | 452 | 52 | 32 | 14 | 412.5 | 19.00 |
| HML84 | Tr420 x 5 | 490 | 462 | 52 | 32 | 14 | 422.5 | 19.40 |
| HML86 | Tr430 x 5 | 500 | 472 | 52 | 32 | 14 | 432.5 | 19.80 |
| HML88 | Tr440 x 5 | 520 | 490 | 60 | 32 | 15 | 442.5 | 27.00 |
| HML90 | Tr450 x 5 | 520 | 490 | 60 | 32 | 15 | 452.5 | 23.80 |
| HML92 | Tr460 x 5 | 540 | 510 | 60 | 32 | 15 | 462.5 | 28.00 |
| HML94 | Tr470 x 5 | 540 | 510 | 60 | 32 | 15 | 472.5 | 25.00 |
| HML96 | Tr480 x 5 | 560 | 530 | 60 | 36 | 15 | 482.5 | 29.50 |
| HML98 | Tr490 x 5 | 580 | 550 | 60 | 36 | 15 | 492.5 | 34.00 |
| HML100 | Tr500 x 5 | 580 | 550 | 68 | 36 | 15 | 502.5 | 35.00 |
| HML104 | Tr520 x 6 | 600 | 570 | 68 | 36 | 15 | 523 | 37.00 |
| HML106 | Tr530 x 6 | 630 | 590 | 68 | 40 | 20 | 533 | 47.00 |
| HML108 | Tr540 x 6 | 630 | 590 | 68 | 40 | 20 | 543 | 43.50 |

• Tr means 30’ thread and the digits are major diameter of thread and pitch.
NOTE: The speci?cation of HML can be applied for HNL.

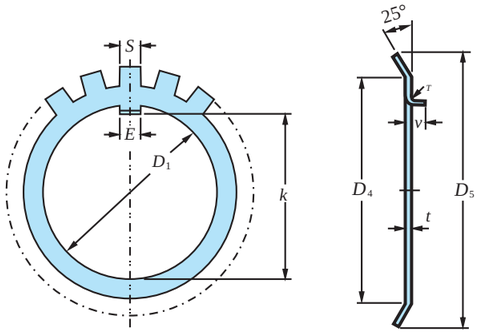


MB
AW

| Lock Washers No. | D1 mm | K mm | E mm | t mm | S mm | D4 mm | D5 mm | r mm | u mm | Number of Tongues | Weight per 100 places Kg. | Lock Nuts No. |
|---|---|---|---|---|---|---|---|---|---|---|---|---|
| MB00 | 10 | 8.5 | 3 | 1 | 3 | 13 | 21 | 0.5 | 2 | 9 | 0.131 | KM 00 |
| MB01 | 12 | 10.5 | 3 | 1 | 3 | 17 | 25 | 0.5 | 2 | 9 | 0.192 | KM 01 |
| MB02 | 15 | 13.5 | 4 | 1 | 4 | 21 | 28 | 1 | 2.5 | 13 | 0.253 | KM 02 |
| MB03 | 17 | 15.5 | 4 | 1 | 4 | 24 | 32 | 1 | 2.5 | 13 | 0.313 | KM 03 |
| MB04 | 20 | 18.5 | 4 | 1 | 4 | 26 | 36 | 1 | 2.5 | 13 | 0.350 | KM 04 |
| MB05 | 25 | 23 | 5 | 1.2 | 5 | 32 | 42 | 1 | 2.5 | 13 | 0.640 | KM 05 |
| MB06 | 30 | 27.5 | 5 | 1.2 | 5 | 38 | 49 | 1 | 2.5 | 13 | 0.780 | KM 06 |
| MB07 | 35 | 32.5 | 6 | 1.2 | 5 | 44 | 57 | 1 | 2.5 | 15 | 1.040 | KM 07 |
| MB08 | 40 | 37.5 | 6 | 1.2 | 6 | 50 | 62 | 1 | 2.5 | 15 | 1.230 | KM 08 |
| MB09 | 45 | 42.5 | 6 | 1.2 | 6 | 56 | 69 | 1 | 2.5 | 17 | 1.520 | KM 09 |
| MB10 | 50 | 47.5 | 6 | 1.2 | 6 | 61 | 74 | 1 | 2.5 | 17 | 1.600 | KM 10 |
| MB11 | 55 | 52.5 | 8 | 1.2 | 7 | 67 | 81 | 1 | 4 | 17 | 1.960 | KM 11 |
| MB12 | 60 | 57.5 | 8 | 1.5 | 7 | 73 | 86 | 1.2 | 4 | 17 | 2.530 | KM 12 |
| MB13 | 65 | 62.5 | 8 | 1.5 | 7 | 79 | 92 | 1.2 | 4 | 19 | 2.900 | KM 13 |
| MB14 | 70 | 66.5 | 8 | 1.5 | 8 | 85 | 98 | 1.2 | 4 | 19 | 3.340 | KM 14 |
| MB15 | 75 | 71.5 | 8 | 1.5 | 8 | 90 | 104 | 1.2 | 4 | 19 | 3.560 | KM 15 |
| MB16 | 80 | 76.5 | 10 | 1.8 | 8 | 95 | 112 | 1.2 | 4 | 19 | 4.640 | KM 16 |
| MB17 | 85 | 81.5 | 10 | 1.8 | 8 | 102 | 119 | 1.2 | 4 | 19 | 5.240 | KM 17 |
| MB18 | 90 | 86.5 | 10 | 1.8 | 10 | 108 | 126 | 1.2 | 4 | 19 | 6.230 | KM 18 |
| MB19 | 95 | 91.5 | 10 | 1.8 | 10 | 113 | 133 | 1.2 | 6 | 19 | 6.770 | KM 19 |
| MB20 | 100 | 96.5 | 12 | 1.8 | 10 | 120 | 142 | 1.2 | 6 | 19 | 7.650 | KM 20 |
| MB21 | 105 | 100.5 | 12 | 1.8 | 12 | 126 | 145 | 1.2 | 6 | 19 | 8.260 | KM 21 |
| MB22 | 110 | 105.5 | 12 | 2 | 12 | 133 | 154 | 1.2 | 6 | 19 | 9.400 | KM 22 |
| MB23 | 115 | 110.5 | 12 | 2 | 12 | 137 | 159 | 1.5 | 6 | 19 | 10.800 | KM 23 |
| MB24 | 120 | 115 | 14 | 2 | 12 | 138 | 164 | 1.5 | 6 | 19 | 10.500 | KM 24 |
| MB25 | 125 | 120 | 14 | 2 | 12 | 148 | 170 | 1.5 | 6 | 19 | 11.800 | KM 25 |
| MB26 | 130 | 125 | 14 | 2 | 12 | 149 | 175 | 1.5 | 6 | 19 | 11.300 | KM 26 |
| MB27 | 135 | 130 | 14 | 2 | 14 | 160 | 185 | 1.5 | 6 | 19 | 14.400 | KM 27 |
| MB28 | 140 | 135 | 16 | 2 | 14 | 160 | 192 | 1.5 | 8 | 19 | 14.200 | KM 28 |

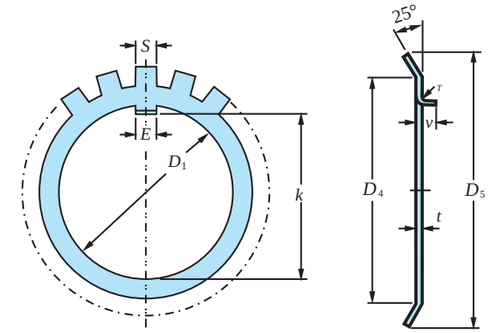


MB
AW

| Lock Washers No. | D1 mm | K mm | E mm | t mm | S mm | D4 mm | D5 mm | r mm | u mm | Number of Tongues | Weight per 100 places Kg. | Lock Nuts No. |
|---|---|---|---|---|---|---|---|---|---|---|---|---|
| MB29 | 145 | 140 | 16 | 2 | 14 | 171 | 202 | 1.5 | 8 | 19 | 16.800 | HM 29 |
| MB30 | 150 | 145 | 16 | 2 | 14 | 171 | 205 | 1.5 | 8 | 19 | 15.500 | HM 30 |
| MB31 | 155 | 147.5 | 16 | 2.5 | 16 | 182 | 212 | 1.5 | 8 | 19 | 20.900 | HM 31 |
| MB32 | 160 | 154 | 18 | 2.5 | 16 | 182 | 217 | 1.5 | 8 | 19 | 22.200 | HM 32 |
| MB33 | 165 | 157.5 | 18 | 2.5 | 16 | 193 | 222 | 1.5 | 8 | 19 | 24.100 | HM 33 |
| MB34 | 170 | 164 | 18 | 2.5 | 16 | 193 | 232 | 1.5 | 8 | 19 | 24.700 | HM 34 |
| MB36 | 180 | 174 | 20 | 2.5 | 18 | 203 | 242 | 1.5 | 8 | 19 | 26.800 | HM 36 |
| MB38 | 190 | 184 | 20 | 2.5 | 18 | 214 | 252 | 1.5 | 8 | 19 | 27.800 | HM 38 |
| MB40 | 200 | 194 | 20 | 2.5 | 18 | 226 | 262 | 1.5 | 8 | 19 | 29.300 | HM 40 |
| MB44 | 220 | 213 | 24 | 3.0 | 20 | 250 | 292 | - | - | 19 | 48.300 | HM 44 |
| MB48 | 240 | 233 | 24 | 3.0 | 20 | 270 | 312 | - | - | 19 | 50.200 | HM 48 |
| MB52 | 260 | 253 | 28 | 3.0 | 24 | 300 | 342 | - | - | 23 | 72.900 | HM 52 |
| MB56 | 280 | 273 | 28 | 3.0 | 24 | 320 | 362 | - | - | 23 | 75.900 | HM 56 |

NOTE: The speci?cation of MB can be applied for AW.

MBL AWL

| Lock Washers No. | D1 mm | K mm | E mm | t mm | S mm | D4 mm | D5 mm | r mm | u mm | Number of Tongues | Weight per 100 pieces Kg. | Lock Nuts No. |
|---|---|---|---|---|---|---|---|---|---|---|---|---|
| MBL24 | 120 | 115 | 14 | 2 | 12 | 133 | 155 | 1.5 | 6 | 19 | 7.7 | HML 24 |
| MBL26 | 130 | 125 | 14 | 2 | 12 | 143 | 165 | 1.5 | 6 | 19 | 8.7 | HML 26 |
| MBL28 | 140 | 135 | 16 | 2 | 14 | 151 | 175 | 1.5 | 8 | 19 | 10.9 | HML 28 |
| MBL30 | 150 | 145 | 16 | 2 | 14 | 164 | 190 | 1.5 | 8 | 19 | 11.3 | HML 30 |
| MBL32 | 160 | 154 | 18 | 2.5 | 16 | 174 | 200 | 1.5 | 8 | 19 | 16.2 | HML 32 |
| MBL34 | 170 | 164 | 18 | 2.5 | 16 | 184 | 210 | 1.5 | 8 | 19 | 19 | HML 34 |
| MBL36 | 180 | 174 | 20 | 2.5 | 18 | 192 | 220 | 1.5 | 8 | 19 | 18 | HML 36 |
| MBL38 | 190 | 184 | 20 | 2.5 | 18 | 202 | 230 | 1.5 | 8 | 19 | 20.5 | HML 38 |
| MBL40 | 200 | 194 | 20 | 2.5 | 18 | 218 | 240 | 1.5 | 8 | 19 | 21.4 | HML 40 |

NOTE: The speci?cation of MBL can be applied for AWL.

# Lock Plates

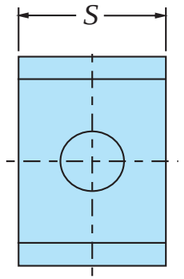


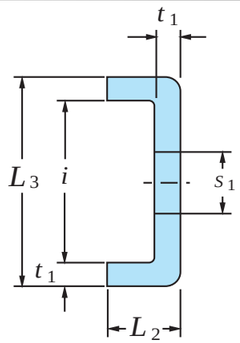


MS31
AL

| Lock Plates No. | t1 mm | S mm | L2 mm | S1 mm | i mm | L3 mm | Suitable Lock Nuts No. | Weight per 100 pcs. Kg |
|---|---|---|---|---|---|---|---|---|
| MS3144 | 4 | 20 | 12 | 9 | 22.5 | 30.5 | HM 3144 | 2.600 |
| MS3148 | 4 | 20 | 12 | 9 | 22.5 | 30.5 | HM 3148 | 2.600 |
| MS3152 | 4 | 24 | 12 | 12 | 25.5 | 33.5 | HM 3152 | 3.390 |
| MS3156 | 4 | 24 | 12 | 12 | 25.5 | 33.5 | HM 3156 | 3.390 |
| MS3160 | 4 | 24 | 12 | 12 | 30.5 | 38.5 | HM 3160 | 3.790 |
| MS3164 | 5 | 24 | 15 | 12 | 31 | 41 | HM 3164 | 5.350 |
| MS3168 | 5 | 28 | 15 | 14 | 38 | 48 | HM 3168 | 6.650 |
| MS3172 | 5 | 28 | 15 | 14 | 38 | 50 | HM 3172 | 6.650 |
| MS3176 | 5 | 32 | 15 | 14 | 40 | 55 | HM 3176 | 7.960 |
| MS3180 | 5 | 32 | 15 | 18 | 45 | 55 | HM 3180 | 8.200 |
| MS3184 | 5 | 32 | 15 | 18 | 45 | 55 | HM 3184 | 8.200 |
| MS3188 | 5 | 36 | 15 | 18 | 43 | 53 | HM 3188 | 9.000 |
| MS3192 | 5 | 36 | 15 | 18 | 43 | 53 | HM 3192 | 9.000 |
| MS3196 | 5 | 36 | 15 | 18 | 53 | 63 | HM 3196 | 10.400 |
| MS31100 | 5 | 40 | 15 | 18 | 45 | 55 | HM 31100 | 10.500 |

NOTE: The speci?cation of MS31 can be applied for AL

MS30 ALL

| Lock Plates No. | t1 mm | S mm | L2 mm | S1 mm | i mm | L3 mm | Suitable Lock Nuts No. | Weight per 100 pcs. Kg |
|---|---|---|---|---|---|---|---|---|
| MS3044 | 4 | 20 | 12 | 7 | 13.5 | 21.5 | HM 3044 | 2.120 |
| MS3048 | 4 | 20 | 12 | 9 | 17.5 | 25.5 | HM 3048 | 2.290 |
| MS3052 | 4 | 20 | 12 | 9 | 17.5 | 25.5 | HM 3052 | 2.290 |
| MS3056 | 4 | 24 | 12 | 9 | 17.5 | 25.5 | HM 3056 | 2.920 |
| MS3060 | 4 | 24 | 12 | 9 | 20.5 | 28.5 | HM 3060 | 3.160 |
| MS3064 | 5 | 24 | 15 | 9 | 21 | 31 | HM 3064 | 4.560 |
| MS3068 | 5 | 24 | 15 | 9 | 21 | 31 | HM 3068 | 4.560 |
| MS3072 | 5 | 28 | 15 | 9 | 20 | 30 | HM 3072 | 5.030 |
| MS3076 | 5 | 28 | 15 | 12 | 24 | 34 | HM 3076 | 5.280 |
| MS3080 | 5 | 28 | 15 | 12 | 24 | 34 | HM 3080 | 5.280 |
| MS3084 | 5 | 32 | 15 | 12 | 24 | 34 | HM 3084 | 6.110 |
| MS3088 | 5 | 32 | 15 | 14 | 28 | 38 | HM 3088 | 6.450 |
| MS3092 | 5 | 32 | 15 | 14 | 28 | 38 | HM 3092 | 6.450 |
| MS3096 | 5 | 36 | 15 | 14 | 28 | 38 | HM 3096 | 7.290 |
| MS30100 | 5 | 36 | 15 | 14 | 28 | 38 | HM 30100 | 7.290 |

NOTE: The speci?cation of MS30 can be applied for ALL.



# NOTES