Classic Salt & pepper
Diameter 3.2 cm, height 7.5 cm
Matt finish

Regular Salt & pepper
Diameter 3.2 cm, height 7.5 cm
Matt finish

Stylish salt & pepper
Diameter 3.2 cm, height 7.5 cm
Matt finish

Rectangular salt & pepper
Matt/Mirror finish
Plain/Hammered

Marvelous salt & pepper.
Diameter 3.2 cm, height 7.5 cm
Mirror finish

2 tone salt & pepper
Upper part mirror, lower part matt finish
Diameter 3.2 cm, height 7.5 cm

Pyramid salt & pepper

Twisted salt & pepper

Classic salt & pepper

Table signs

Serving Plate
Size : 14 inch

Charger plate/hammered/gold finish

Set of square Tray
310/275 mm, 370/ 230 mm

Tray 430/310 mm

Set of Trays
255/130 mm, 310/150 mm,365/130 mm, 425/150 mm

Set of square hammered trays
Weight : 100,240,330,460,700,1000 gm
Dimensions :
15/15,18/18,21/21,25/25,31/31

Set of 3 oval tray hammered
Weight : 310,400, 570 gm

Set of 3 triangular tray
Weight 285,200,460 gm

Oval Tray
Length : 20,25,30,35,40,45
50,55 cm

LADDLE SET

Cooking & serving accessories sets

Cutlery /kitchen tool holder
(diameter/height)
7/9,9/11,10/12,11.13.5,12/18 cm

Kitchen tool holder
Size 10/12,10/18 cm

Kitchen tool holder
Size:

Classic water jug with ice guard
Capacity:1.4,1.7,2.4

Royal jug with ice guard
Capacity: 1500 ml

Oil pourer
Capacity: 250,500,750 ml

Bread basket (line)
Diameter : 23 cm weight 220 gm

Fruit Bowl
Diameter : 23 cm
Weight : 350 gm

Dotted Fruit Bowl
Diameter : 23 cm
weight : 360 gm

DL fruit bowl
Diameter : 24 cm
Weigh : 350 gm

Double curve fruit bowl
Diameter : 23 CM
Weight : 450 gm

Mixing Bowl
Diameter:14/16/18/20/22/24/26/28/30/32/34/36/38/40 cm

2 tone German bowl
Size:14/16/18/20/22/24/26/28/30/32/34
Capacity:0.75,1.5,3,4,5,6,8 quartz.

Salad bowl
Diameter :13/20/24/29/36 cm
Outside mirror, Inside Satin finish

mixing Colander
Diameter :
18/20/22/24/26/28/30/32
/34/36/38/40 cm

Colander
Diameter:20/22/24/26/28 cm

Diameter : 22 cm
Weight : 290 gm
Serving Bowl Hammered

Micro oven safe bowl/Euro bowl
Diameter :14,16,18,20 cm

Dimple euro bowl
Micro oven safe bowl
Diameter:14,16,18,20 cm

Spice container box(Plain, belly)
Size:

Steel bowl with plastic lid
Size:12,14,16,18 cm

Lock Lunch box container
Size:

Classic lock N lock storage box
Size:

German bowl with inside lid
Diameter: 14,18,22,26,cm
Capacity:0.75,1.5,3,5 quartz

German bowl with antiskid base & inside lid.
Diameter: 14,18,22,26,cm
Capacity:0.75,1.5,3,5 quartz

German bowl with grater & antiskid base
Diameter:22,24,26 cm
Capacity:3,4,5 quartz

3 pieces bowl set
Size: 18,22,26 cm

German bowl with outside fitting lid
Diameter:14,18,22,26

Serving bowl
Inside steel, outside plastic
Single wall steel cover
Diameter:15,17,19 cm

Single wall serving bowl set
Size:

Clip Tiffin
7X2,7X3,7X4,8X2,8X3,8X4
9X2,9X3,9X4

Regular lunch box
2,3,4,5 container boxes

Measuring Bowl
Capacity:800,1200,2500 ml

Salad bowl
Dia : 20 cm
mirror finish

Double wall hammered salad bowl
Diameter 28 cm
Mirror finish

Double wall belly bowl
Mirror finish
Diameter:

Double wall mini bowl
Diameter: 9 cm
Outside mirror, Inside satin finish

Apple bowl
Diameter:3.5,4,4.5,5,5.5,6,6.5 7

Astra bar tray
Diameter : 36 cm
Weight : 900 gram

Cocktail shaker

Cocktail shaker

Cocktail shaker

CAPACITY : 250 ml

Cocktail shaker (500 ml)

Cocktail shaker (500 ml)

Cocktail shaker (750 ml)

Cocktail shaker (1000 ml)

Party Cocktail Shaker
Capacity : 1750 ml

(capacity : 750 ml

(capacity : 500 ml

capacity: 600

RECEIPE SHAKER

Bar accessories
Ice tong 6 inch, ice scoop.

Measuring cup and spoon
¼,1/3,1/2 and full

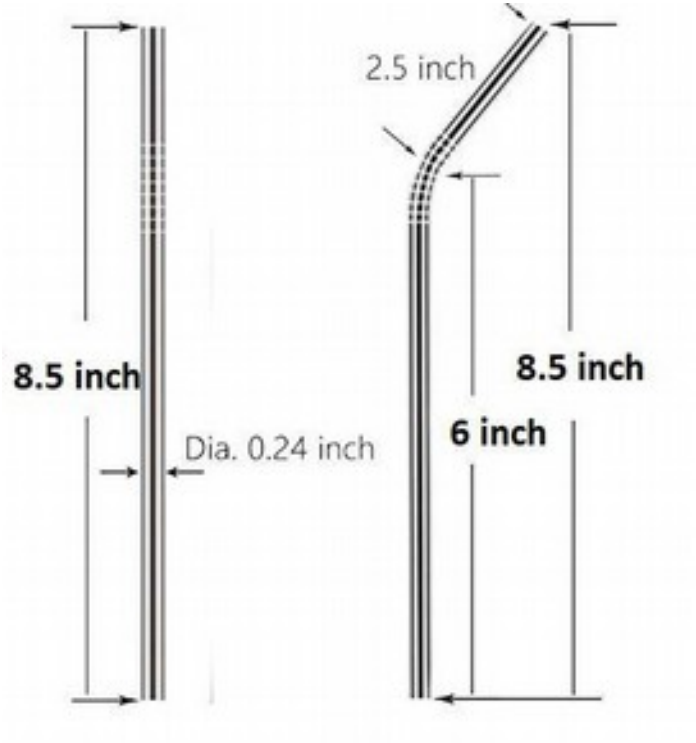

Drinking straws

Julie Cup/ice cream cup
Weight : 125 gm

Mule mug
Capacity : 16 ounce
Weight : 180 gram.

Mule mug copper finish
Capacity : 16 ounce

Mule mug copper finish
Capacity : 16 ounce

Classic tea set
weight 455,285,260

Tea Pot
Weight :585 gm

Classic tea/coffee sets
Weight : 250,90,95

Amazing Tea/coffee sets
Weight : 480,350,190 gm

Milk/coffee pot sets
weight : 400/320 /250/180 gm

Milk/coffee pot

Classic coffee mug
Capacity:
weight : 170 gm

Apple shape coffee mug
Capacity:
weight : 150 gm

Regular coffee mug
Capacity:
Size:

special coffee mug
Capacity

Ribbed double wall coffee mug
Capacity:
weight : 240gm

Regular coffee mug
Capacity
weight : 180 gm

Exotic coffee mug
Capacity:
weight : 180 gm

Coffee pot/warmer
Size:

Regular tea cup
Size: Capacity:

Apple tea cups
Capacity:

Hammered tea cup
Capacity:

Amazing Cup
Capacity:

Tong

Masher with silica handle

Lemon squeezer

Classic Ice tong

Salad tong
With silica coated handle/without

TONGS

Salad tong

Cake tong

Stainless steel both side muddler

Bar spoon mixer

Twisted spoon

Twisted stirer

Amazing peg measures
Size: 20/40, 25/50, 30/60 ml

Marvelous peg measures
Size 20/40, 25/50, 30/60 ml

Classic peg measures
Size 20/40, 25/50, 30/60 ml

Wine pourer

Bar tool set

Candle Holder
Dimensions
60/60,60/80,60/120,60/160

Apple Ice bucket
Capacity: 1500 ml
Double wall body
Outside mirror, Inside satin finish

Regular Ice Bucket
Capacity : 1500 ml
Diameter : 15 cm
Height : 16 cm
Weight : 770 gm

Wine cooler
Height 20 cm
Diameter : 12 cm
Weight : 570 gm

champagne bucket
Weight: 550 gm
Dimension : 21/21 cm

Premium bar tray
Diameter : 39 cm
Weight : 1000 gram

Regular Ice Bucket
Capacity : 3000 ml
Weight : 1050 gm
Diameter: 18 cm
Height : 18 cm

Ribbed ice bucket
Capacity: 1500 ml

Ice bucket
Size 15/15 cm, capacity: 1500 ml
Upper & lower matt finish
Center hammered & mirror finish

Ice bucket
Size: 15/15 cm, capacity:1500 ml
Hammered, copper coated.

Ice bucket hammered
Diameter X height: 15X15
Capacity: 1500 ml
Double wall, outer body hammered &
Inner Matt finish

Hammered wine cooler
Size: 12X18,12X20 cm
Double wall, outer body hammered & mirror finish.
Inside satin finish

Wine cooler
Height 18 cm
Diameter : 12 cm

champagne bucket
WEIGHT : 450 GM
Dimension : 20/20 cm

Premium bar tray
Diameter : 39 cm
Weight : 1000 gram

Belly bar tray
Diameter : 36 cm
Weight : 700 gram

Punch bowl
Diameter : 32/34/36

Bar tool set
1 stand along with 5 bar accessories.

Copper coated bar accessories
1 CS,1 Peg measures,1 muddler,
1 bar spoon

Wine/beer mug
Size:
Capacity:

Pet Bowl
Size:1/2pt,1 pt,1,2,3,5 quartz

Black colored pet bowl
Size: 1/2pt,1 pt,1,2,3,5 quartz

Copper coated pet bowl
Size: 1/2pt,1 pt,1,2,3,5 quartz

Dog bowl
Size:8,16,24,32,64 96 ounce

Potato/Tomato Smasher

Potato/Tomato Smasher

Egg Holder

Anti Skid bowl
Diameter : 16/18/20/22/28/30 cm

Round shape storage box
All size available

Belly shape Storage box
All size available

Storages boxes for cereals
Size:

Top See through canisters
Size:

See through canisters
Size:

Black colored canister
Size:13.6 x 13.6 x 17 cm

Cherry colored coated canister

Canister

Regular Napkin holder
Matt finish

Regular Napkin holder with punching
Matt/Mirror finish

Napkin holder Cutlery design
Matt finish

Plain napkin holder
Matt finish

Royal napkin holder
Matt finish

Royal napkin holder with regular base
Matt finish.

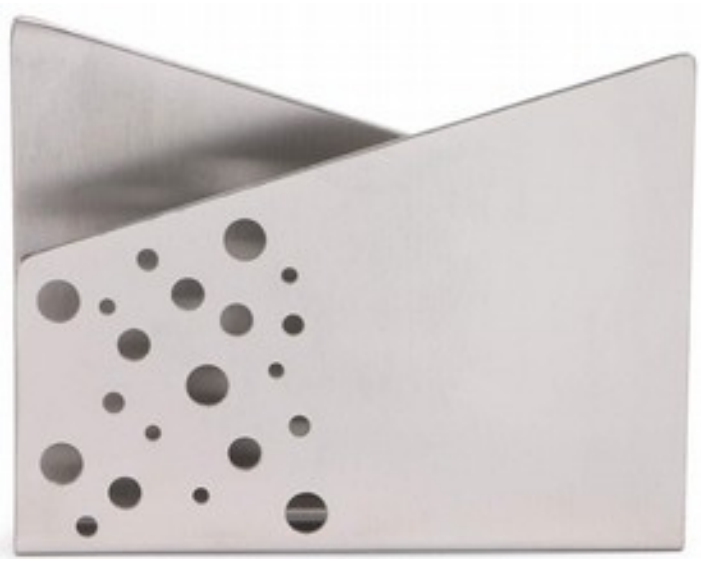

Exotic Napkin holder
Matt finish
Plain/hammered

Royal napkin holder(without punching)
Matt finish

Mehar Napkin holder
Matt finish
Plain/Hammered

Royal special napkin holder
Mirror finish,hammered

Napkin holder
Plain & matt finish
Hammered & mirror finish

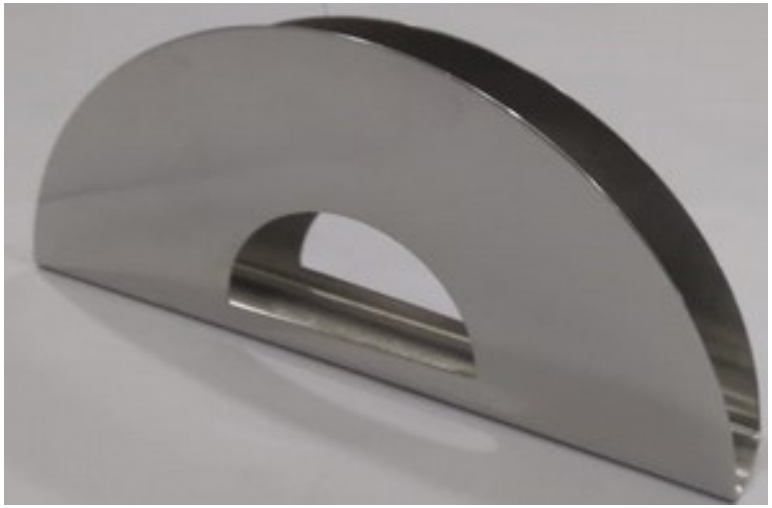

Exotic napkin holder
Matt finish

Round coaster

Classic round coaster

Classic square coaster

Square coaster

Stock pot
Size:

Bucket
Size:
Capacity:

Dinner sets
36/51/81/101/151

Conical strainer
Size: 14,16,18,20 cm

Brush holder

Deepak metal

C 520,Narela Industrial area, Delhi 110041
www.deepakmetal.com,www.meharindia.co.in
Skype: Mehar.India
Email:info@meharindia.co.in