E-2060

TECHNICAL SPECIFICATIONS

- Supply voltage : 24 - 50VAC
- Output current : 2 -- 6 Amp
- 14 selectable resolutions in decimal and binary, up to 25600 steps/rev
- Pulse input frequency up to 200 Khz
- Ambient Temperature 10°C TO 80°C
- Connection Type Screw Type Terminals
- Dimension (mm): 97 X 147 X 30H

E-22078

TECHNICAL SPECIFICATIONS

- Supply voltage : 90-220VAC
- Output current : 0.45...7.8 Amp
- 16 selectable resolutions in decimal and binary, up to 10000 steps/rev
- Pulse input frequency up to 400 KHz
- Ambient Temperature 10°C TO 70°C
- Connection Type Screw Type Terminals
- Dimension (mm): 176X61X 145 H

E-2208

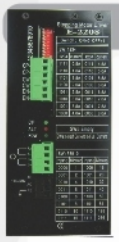

TECHNICAL SPECIFICATIONS

- Supply voltage : 110-220VAC
- Output current : 0.5...8 Amp
- 16 selectable resolutions in decimal and binary, up to 51200 steps/rev
- Pulse input frequency up to 400 KHz
- Ambient Temperature 10°C TO 70°C
- Connection Type Screw Type Terminals
- Dimension (mm): 195X107X 81 H

B-804/B-806

TECHNICAL SPECIFICATIONS

- Supply Voltage 24 to 75 V DC
- Output Current 1.9... . 4.0 A (B- 804)
- Output Current : 1.9 -----6.0A (B-806)
- Step Modes 1/1-, 1/2
- Current Adjustment via DIP Switches
- Clock Frequency 0 to 400 kHz max.
- Pulse Width (Clock) min. 1.25 µs high/low
- Ambient Temperature 10°C TO 80°C
- Connection Type Screw Type Terminals
- Dimension(mm) : 66 X 100 X 31H

E-8078

TECHNICAL SPECIFICATIONS

- Supply voltage : 24 – 60 VDC
- Output current : 2.8....7.8Amp
- 15 selectable resolutions in decimal and binary, up to 51200 steps/rev
- Pulse input frequency up to 200 Khz
- Ambient Temperature 10°C TO 80°C
- Connection Type Screw Type Terminals
- Dimension (mm): 97 X 151X 48H

E-5042

TECHNICAL SPECIFICATIONS

- Supply voltage : 24 - 40VDC
- Output current : 1...4.2Amp
- 15 selectable resolutions in decimal and binary, up to 25,600 steps/rev
- Pulse input frequency up to 300 KHz
- Ambient Temperature 10°C TO 70°C
- Connection Type Screw Type Terminals
- Dimension (mm): 75.5 X 118 X 33H

DIMENSION DRAWING FOR MODEL 17H

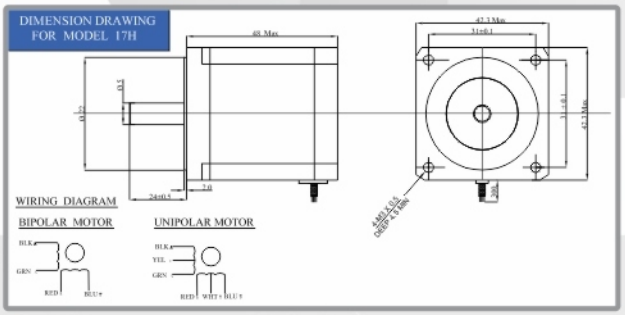

DIMENSION DRAWING FOR MODEL 23H

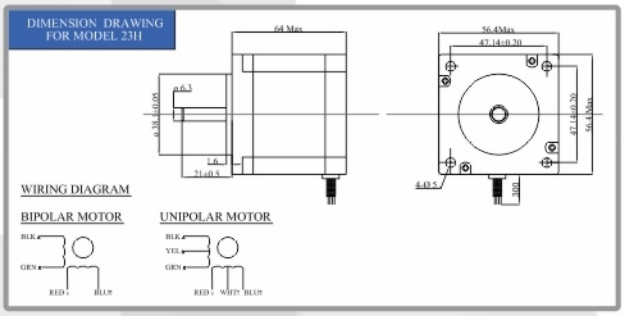

DIMENSION DRAWING FOR MODEL 34H

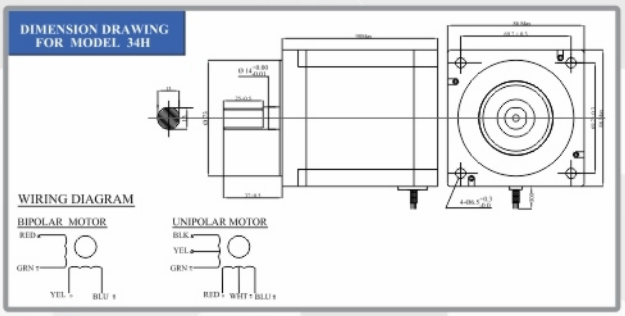

DIMENDION DRAWING FOR MODEL 42H

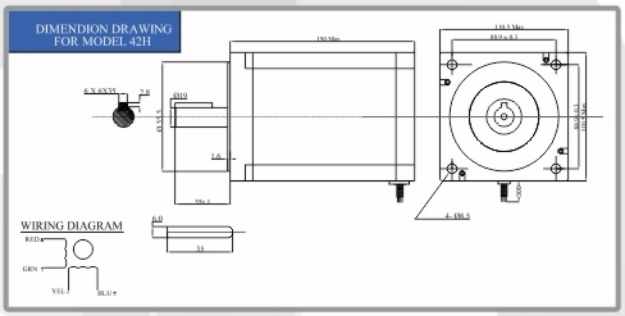

EXCELLA ELECTRONICS
An ISO 9001:2008 Company

H.O.: 54, Annpurna Indl. Estate, Tilak Road, Ghatkopar (East), Mumbai - 400 077. India.
Tel.: +91-22-21029911 | Fax : +91-22-21029922 | E-mail : sales@excellaelectronics.com | www.excellaelectronics.com