ASMI ENGINEERING

BOLTING TOOLS

A COMPLETE RANGE OF HYDRAULIC AND MECHANICAL TOOLS FOR BOLTING

ASMI ENGINEERING

ASMI ENGINEERING carries the most comprehensive life of Bolting Tool Torque Wrenches. Whether need manual or hydraulic, air driven or Electric. We are the one stop shop for all Bolting needs.

A 2015 established company, we **ASMI ENGINEERING**, deal in a comprehensive range of engineering tools and machinery that are applauded for their world-class design and performance. Our product range consists of Hydraulic Torque Wrenches, Pneumatic Torque Wrench, Electric Torque Wrenches, Bolt Tensioner, Flange Spreader, Nut Splitter, Manual Torque Wrenches, Tube Expander, Pipe Facing Machine and Many More.

A **Bolting Tool Torque Wrench** is a power tool designed to exert torque on a fastener to achieve proper tightening or loosening of a connection through the use of hydraulics or Pneumatic pressure. A **Bolting Torque Wrench** is applied to the nut either directly or in conjunction with an impact socket. **Bolting Torque wrenches** apply a predetermined, controlled amount of torque to a properly lubricated fastener.

Today's tools offer benefits such as lighter weights, smaller nose radius dimensions for fitting into tight spaces, use of exotic alloys, actuation triggers on the tool itself, multi-position reaction members, 360° × 360° hose swivels, and the ability to run multiple tools simultaneously from a single power pack.

The main characteristics of a hydraulic torque wrench which set it apart from other powered wrenches of similar function are that (1) it must generate torque using only hydraulic means (2) it must be self-ratcheting, and (3) it must include an accurate method of determining the amount of torque applied.

Hydraulic torque wrenches typically offer accuracy of ±3% and have a high degree of repeatability making them well suited to applications where large bolts are involved and a high degree of accuracy is required.

A hydraulic torque wrench is significantly quieter, lighter weight and more accurate than pneumatic impact wrenches capable of similar torque output, making it an appealing alternative for many users to the very loud and cumbersome impact wrenches or torque multipliers which were formerly the only viable option for working with very large nuts and bolts until the hydraulic torque wrench was introduced.

APPLICATIONS.

INDEX

1) ASQ SERIES SQUARE DRIVE HYDRAULIC WRENCHES.

2) AHX SERIES LOW CLEARANCE HYDRAULIC WRENCHES.

3) PUMPS USE WITH HYDRAULIC WRENCHES.

4) POWER HYDRAULIC NUT SPLITTERS.

5) POWER FLANGE SPREADERS.

6) HYDRAULIC VERTICAL LIFTING & SPREADING WEDGE.

7) MECHANICAL CLICK TORQUE WRENCHES.

8) BACKUP WRENCHES.

9) PNEUMATIC TORQUE WRENCHES.

10) TORQUE MULTIPLIER.

11) HYDRAULIC BOLT TENSIONERS.

ASQ SERIES SQUARE DRIVE HYDRAULIC WRENCHES

Most Advance Yet Simple Design

ASQ SERIES FEATURES & SPECIFICATIONS

01. Aircraft Material - The exclusive light weight uni - body housing.

02. Balanced Piston Rod Assembly - Gives load-free piston movement.

03. Multi-Tooth Drive Segment - Ensures up to 27 ° torque stroke.

04. Anti-Back Lash Mechanism - Hands free operation.

05. Laser Engraved Torque Chart - No more referring of catalogue.

06. Multi-Tooth Ratchet - Strong Marginal Steel teeth provide strength, accuracy and 27-degree torque stroke.

07. One Piece Drive Plate - Strong Marginal Steel provides longer life and increased durability.

08. Non-Push Drive – Strong Marginal Steel Enough to withstand Max. Torque.

09. Direct Housing Reaction - Allows use of tool without reaction arm.

10. Steel Reaction Boot - Protects reaction arm.

11. Long Reaction Arm - Allows for reaction on all applications.

12. Arm Retract Button - Easy engage and Dis -engagement of Arm.

13. 360 ° x 360 ° Swivel - Free moment of hose on all applications.

14. No Drip Quick Connect Couplers - Assures easy and safe operation.

ASQ SERIES TECHNICAL

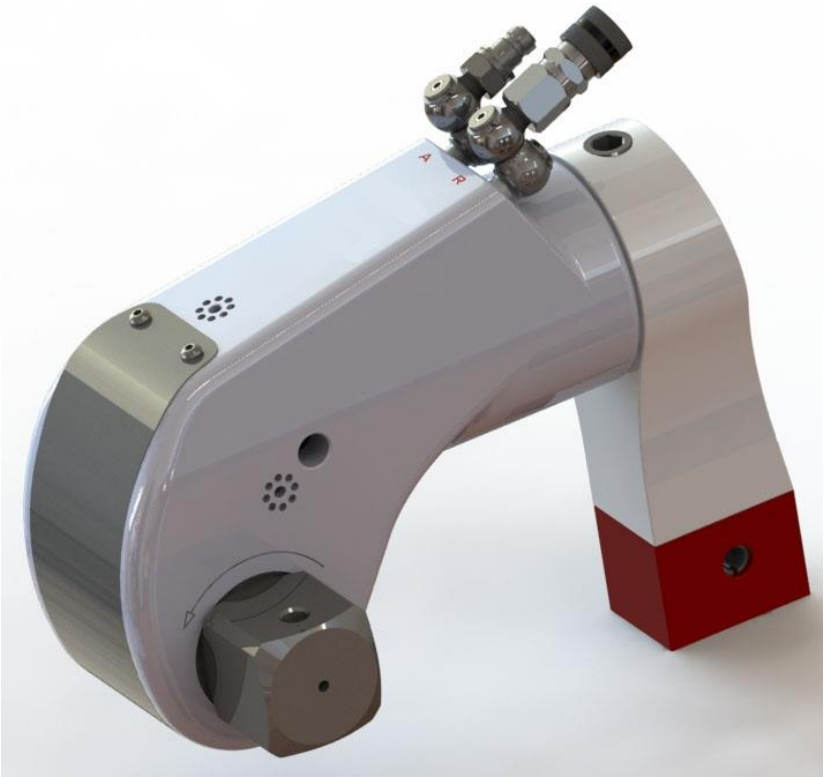

Model No.	ASQ 0.75	ASQ 1	ASQ 2	ASQ 3	ASQ 6	ASQ 7	ASQ 11	ASQ-15	ASQ 20	ASQ 27	ASQ 60
Square Drive	3/4 ” Non Push Thru	3/4 ” Non Push Thru	3/4 ” Non Push Thru	1” Non Push Thru	1.1/2” Non Push Thru	1.1/2” Non Push Thru	1.1/2” Non Push Thru	2.1/2” Non Push Thru	2.1/2” Non Push Thru	2.1/2” Non Push Thru	2.1/2” Non Push Thru
Min. Torque N-m	99	128	168	444	770	1006	1500	2013	2634	3700	7913
(ft/lbs)	77	91	127	330	565	740	1100	1485	1940	2720	5800
Max. Torque N-m	1046	1243	1727	4539	7637	10064	14997	20128	28139	37118	79129
(ft/lbs)	770	914	1270	3330	5600	7400	11000	14845	20625	27200	58000
Output Accuracy	+/-3%	+/-3%	+/-3%	+/-3%	+/-3%	+/-3%	+/-3%	+/-3%	+/-3%	+/-3%	+/-3%
Repeatability	100%	100%	100%	100%	100%	100%	100%	100%	100%	100%	100%
Duty Cycle	100%	100%	100%	100%	100%	100%	100%	100%	100%	100%	100%
Tool Weight Kg / Lbs	1.0 / (2.20)	1.25 / (2.75)	2.50 / (5.80)	4.20 / (9.30)	8.40 / (18.60)	8.90 / (19.60)	13.6 / (30.00)	22.0 / (48.5)	28.5 / (62.7)	32.7 / (72)	60.8 / (133.7)

ASQ SERIES DIMENSIONS

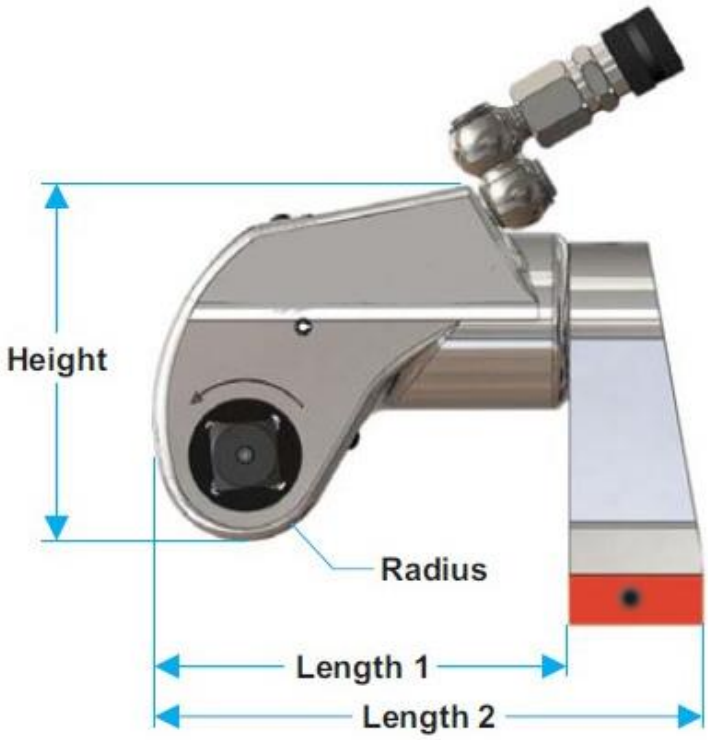

Dimensions																						
Model No.	ASQ 0.75		ASQ 1		ASQ 2		ASQ 3		ASQ 6		ASQ 7		ASQ 11		ASQ 15		ASQ 20		ASQ 27		ASQ 60	
	MM	Inch	MM	Inch	MM	Inch	MM	Inch	MM	Inch	MM	Inch	MM	Inch	MM	Inch	MM	Inch	MM	Inch	MM	Inch
Height	78	3	88	3.5	105	4.15	135	5.3	163	6.4	182	7.17	198	7.81	232	9.15	237	9.35	259	10.2	292	11.5
Length 1	120	4.75	94	3.7	121	4.76	153	6.02	194	7.62	208	8.2	227	8.95	295	11.6	274	10.8	294	11.6	367	14.5
Length 2	92	3.6	123	4.8	160	6.3	213	8.38	254	10	291	11.5	313	12.3	373	14.7	390	15.3	415	16.4	522	20.6
Radius	19	0.74	20	0.78	25	0.98	33	1.28	41	1.62	45	1.78	50	1.96	59	2.3	58	2.29	63	2.46	79	3.1
Width 1	40	1.57	42	1.65	51	2.01	67	2.64	82	3.22	92	3.61	100	3.94	100	3.93	124	4.86	134	5.28	167	6.58
Width 2	53	2	65	2.55	72	2.81	93	3.67	116	4.55	128	5.05	137	5.38	158	6.2	183	7.19	194	7.65	226	8.9
Width 3	87	3.4	87	3.43	118	4.63	149	5.85	175	6.89	204	8.03	225	8.86	252	9.93	275	10.8	293	11.5	372	14.6

ASQ SERIES ACCESSORIES

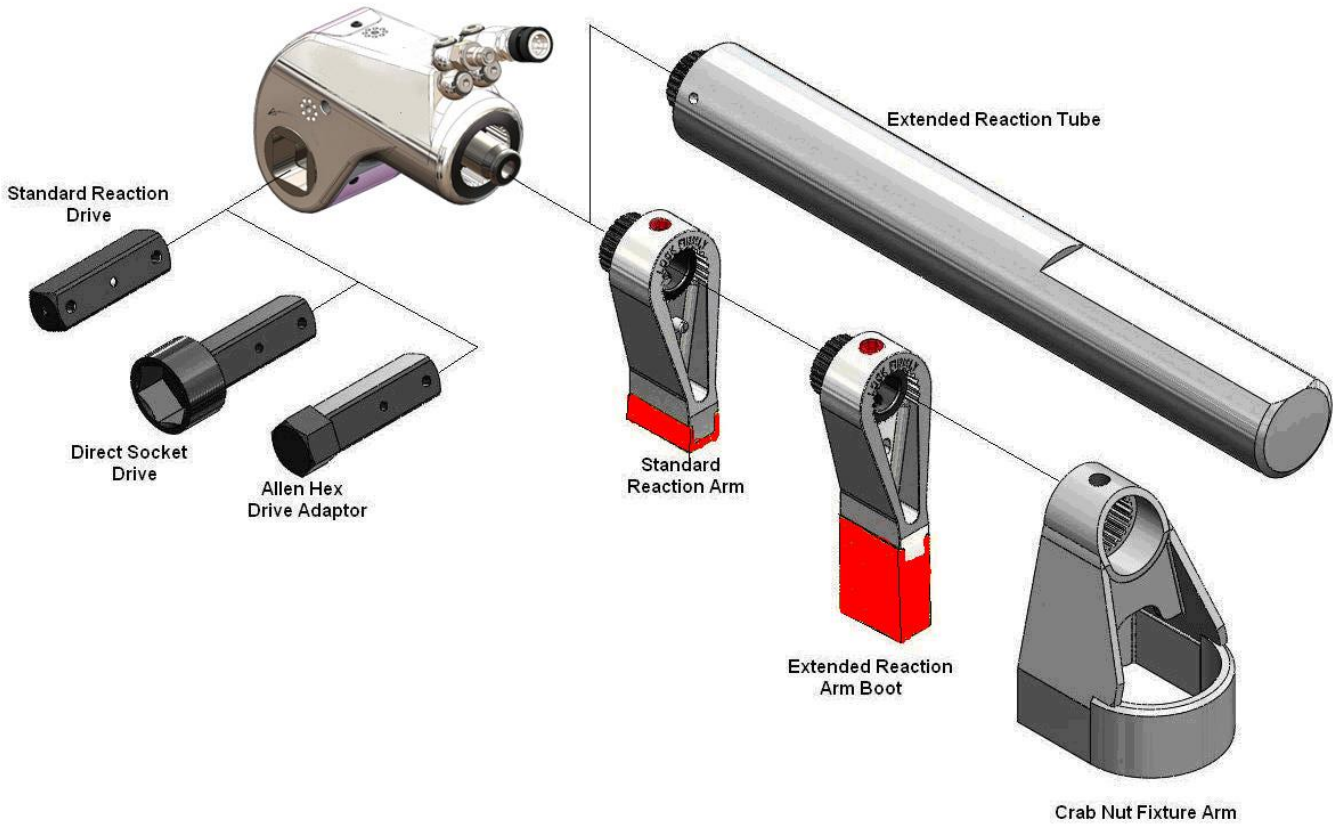

Types of Reaction Arms

In Line Reaction Pad

Tool Model	Length	Height	Width	Ext.
ASQ-2	90.2	42	28.7	21.1
ASQ-3	114.3	54.6	38.6	27.7
ASQ-6	129.5	62.2	47.0	33.8
ASQ-7	158.8	73.7	52.1	42
ASQ-11	174.0	82.8	56.9	49.8
ASQ-15	220.0	98.0	78.8	60.0
ASQ-20	230	105	79.8	76.2
ASQ-27	224.8	110.0	58.4	70
ASQ-60	269.7	140.0	101.6	90

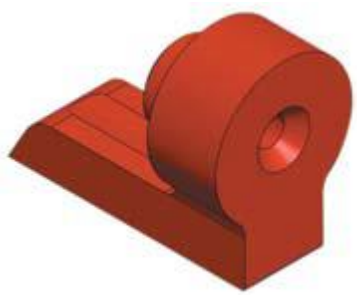

Extended Reaction Tube

Tool Model	Extended Reaction Tube Model	Dia	Length
ASQ-2	AASQ-2-03-ERT	50.8	471.7
ASQ-3	AASQ-3-03-ERT	66.8	603.3
ASQ-6	AASQ-5-03-ERT	76.2	571.5
ASQ-7	AASQ-7-03-ERT	88.9	584.2
ASQ-11	AASQ-11-03-ERT	95.3	637.5
ASQ-15	AASQ-15-03-ERT	101.6	571.5
ASQ-20	AASQ-20-03-ERT	101.6	550
ASQ-27	AASQ-27-03-ERT	127.0	419
ASQ-60	AASQ-60-03-ERT	152.4	355.6

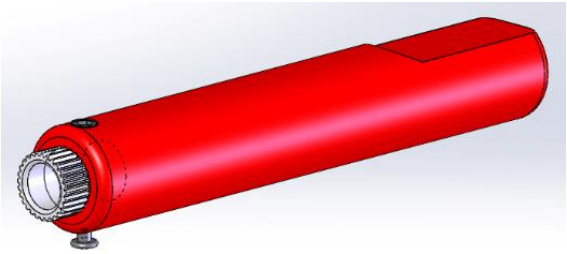

End Cap Protector

Tool Model	End Cap Protector Model
ASQ-0.75	ASQ-0.75- EC
ASQ-1	ASQ-1- EC
ASQ-2	ASQ-2- EC
ASQ-3	ASQ-3- EC
ASQ-6	ASQ-5- EC
ASQ-7	ASQ-7- EC
ASQ-11	ASQ-11- EC
ASQ-15	ASQ-15- EC
ASQ-20	ASQ-20- EC
ASQ-27	ASQ-27- EC
ASQ-60	ASQ-60- EC

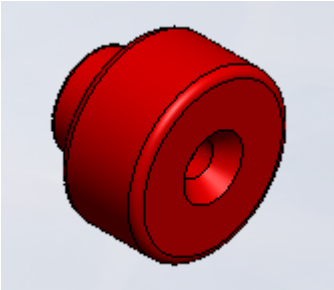

Extension Boot

Part No	Ext	Length	Width
ASQ2-03-EXT1	25.4	38.6	25.4
ASQ2-03-EXT2	50.8		
ASQ2-03-EXT3	76.2		
ASQ3-03-EXT1	25.4	50.8	31.8
ASQ3-03-EXT2	50.8		
ASQ3-03-EXT3	76.2		
ASQ6-03-EXT1	25.4	69.6	50.8
ASQ6-03-EXT2	50.8		
ASQ6-03-EXT3	76.2		
ASQ7-03-EXT1	25.4	69.6	42.7
ASQ7-03-EXT2	50.8		
ASQ7-03-EXT3	76.2		
ASQ11-03-EXT1	25.4	76.2	50.8
ASQ11-03-EXT2	50.8		
ASQ11-03-EXT3	76.2		
ASQ15-03-EXT1	25.4	79.0	59.0
ASQ15-03-EXT2	50.8		
ASQ15-03-EXT3	76.2		
ASQ20-03-EXT1	25.4	105.9	63.5
ASQ20-03-EXT2	50.8		
ASQ20-03-EXT3	76.2		
ASQ27-03-EXT1	25.4	101.6	63.5
ASQ27-03-EXT2	50.8		
ASQ27-03-EXT3	76.2		
ASQ60-03-EXT1	25.4	129.8	89
ASQ60-03-EXT2	50.8		
ASQ60-03-EXT3	76.2		

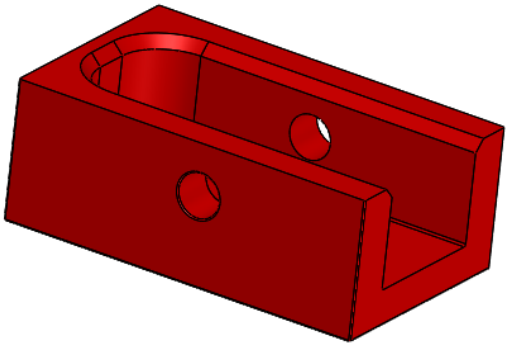

ASQ SERIES TORQUE CONVERSION CHART

For Model ASQ-1 to ASQ-11

P.S.I./FT./lbs							Bar/N.M.						
PSI	ASQ1	ASQ2	ASQ3	ASQ6	ASQ7	ASQ11	Bar	ASQ1	ASQ2	ASQ3	ASQ6	ASQ7	ASQ11
	ft./lbs	ft./lbs	ft./lbs	ft./lbs	ft./lbs	ft./lbs		N.m.	N.m.	N.m.	N.m.	N.m.	N.m.
1,000	91	127	330	534	740	1,090	***68***	123	172	447	724	1,003	1,477
1,200	110	152	395	643	888	1,308	***82***	149	206	535	871	1,203	1,772
1,400	128	178	460	745	1,036	1,526	***95***	173	241	623	1009	1,404	2,068
1,600	146	203	525	855	1,185	1,745	***109***	198	275	711	1159	1,606	2,364
1,800	165	229	590	957	1,332	1,962	***122***	224	310	799	1297	1,805	2,659
2,000	183	255	655	1,067	1,470	2,210	***136***	248	346	888	1446	1,992	2,995
2,200	201	279	722	1,177	1,617	2,430	***150***	272	378	978	1595	2,191	3,293
2,400	219	305	789	1,279	1,765	2,652	***163***	297	413	1069	1733	2,392	3,593
2,600	238	330	856	1,388	1,911	2,873	***177***	322	447	1160	1881	2,589	3,893
2,800	256	356	923	1,490	2,058	3,095	***190***	347	482	1251	2019	2,789	4,194
3,000	274	380	990	1,600	2,210	3,340	***204***	371	515	1341	2168	2,995	4,526
3,200	292	406	1,058	1,710	2,359	3,560	***218***	396	550	1434	2317	3,196	4,824
3,400	311	432	1,126	1,812	2,505	3,785	***231***	421	585	1526	2455	3,394	5,129
3,600	329	457	1,194	1,922	2,652	4,005	***245***	446	619	1618	2604	3,593	5,427
3,800	347	483	1,262	2,024	2,800	4,230	***258***	470	654	1710	2743	3,794	5,732
4,000	366	510	1,330	2,118	2,960	4,400	***272***	496	691	1802	2870	4,011	5,962
4,200	384	533	1,397	2,244	3,108	4,620	***286***	520	722	1893	3041	4,211	6,260
4,400	402	559	1,464	2,346	3,256	4,840	***299***	545	757	1984	3179	4,412	6,558
4,600	420	584	1,531	2,456	3,405	5,060	***313***	569	791	2075	3328	4,614	6,856
4,800	439	609	1,598	2,558	3,552	5,280	***326***	595	825	2165	3466	4,813	7,154
5,000	457	635	1,665	2,667	3,716	5,500	***340***	619	860	2256	3614	5,035	7,453
5,200	475	660	1,732	2,777	3,865	5,720	***354***	644	894	2347	3763	5,237	7,751
5,400	494	686	1,799	2,879	4,013	5,940	***367***	669	930	2438	3901	5,438	8,049
5,600	512	711	1,856	2,989	4,162	6,160	***381***	694	963	2515	4050	5,640	8,347
5,800	530	737	1,933	3,092	4,311	6,380	***394***	718	999	2619	4190	5,841	8,645
6,000	548	760	2,000	3,201	4,440	6,620	***408***	743	1030	2710	4337	6,016	8,970
6,200	567	787	2,065	3,311	4,588	6,838	***422***	768	1066	2798	4486	6,217	9,265
6,400	585	813	2,130	3,413	4,736	7,060	***435***	793	1102	2886	4625	6,417	9,566
6,600	603	838	2,195	3,523	4,884	7,280	***449***	817	1135	2974	4774	6,618	9,864
6,800	622	864	2,260	3,625	5,032	7,500	***462***	843	1171	3062	4912	6,818	10,163
7,000	640	890	2,325	3,735	5,180	7,710	***476***	867	1206	3150	5061	7,019	10,447
7,200	658	914	2,398	3,845	5,328	7,927	***490***	892	1238	3249	5210	7,219	10,741
7,400	676	940	2,461	3,946	5,476	8,147	***503***	916	1274	3335	5347	7,420	11,039
7,600	695	965	2,529	4,057	5,625	8,368	***517***	942	1308	3427	5497	7,622	11,339
7,800	713	991	2,597	4,159	5,772	8,588	***530***	966	1343	3519	5635	7,821	11,637
8,000	731	1,015	2,665	4,269	5,920	8,820	***544***	991	1375	3611	5784	8,022	11,951
8,200	749	1,041	2,731	4,378	6,068	9,045	***558***	1015	1411	3701	5932	8,222	12,256
8,400	768	1,067	2,797	4,480	6,216	9,265	***571***	1041	1446	3790	6070	8,423	12,554
8,600	786	1,092	2,863	4,590	6,365	9,485	***585***	1065	1480	3879	6219	8,625	12,852
8,800	804	1,118	2,929	4,692	6,512	9,705	***598***	1089	1515	3969	6358	8,824	13,150
9,000	823	1,145	2,995	4,802	6,660	9,930	***612***	1115	1551	4058	6507	9,024	13,455
9,200	841	1,168	3,062	4,912	6,808	10,148	***626***	1140	1583	4149	6656	9,225	13,751
9,400	859	1,194	3,129	5,014	6,956	10,368	***639***	1164	1618	4240	6794	9,425	14,049
9,600	877	1,219	3,196	5,124	7,105	10,588	***653***	1188	1652	4331	6943	9,627	14,347
9,800	896	1,245	3,263	5,226	7,252	10,810	***666***	1214	1687	4421	7081	9,826	14,648
10,000	914	1,270	3,330	5,340	7,400	11,010	***680***	1238	1721	4512	7236	10,027	14,919

ASQ SERIES TORQUE CONVERSION CHART

For Model ASQ-15 to ASQ-60

P.S.I./FT./lbs					Bar/N.M.				
PSI	**ASQ15** ft./lbs	**ASQ20** ft./lbs	**ASQ27** ft./lbs	**ASQ60** ft./lbs	**Bar**	**ASQ15** N.m.	**ASQ20** N.m.	**ASQ27** N.m.	**ASQ60** N.m.
1,000	1,475	1940	2,720	5,943	***68***	1999	2629	3,686	8,053
1,200	1,770	2328	3,264	7,132	***82***	2398	3154	4,423	9,664
1,400	2,065	2716	3,808	8,320	***95***	2798	3680	5,160	11,274
1,600	2,360	3104	4,352	9,509	***109***	3198	4206	5,897	12,885
1,800	2,655	3492	4,896	10,697	***122***	3598	4732	6,634	14,494
2,000	2,950	3830	5,440	11,662	***136***	3997	5190	7,371	15,802
2,200	3,245	4213	5,984	12,828	***150***	4397	5709	8,108	17,382
2,400	3,540	4596	6,528	13,994	***163***	4797	6228	8,845	18,962
2,600	3,835	4979	7,072	15,161	***177***	5196	6747	9,583	20,543
2,800	4,130	5362	7,616	16,327	***190***	5596	7266	10,320	22,123
3,000	4,425	5920	8,160	17,387	***204***	5996	8022	11,057	23,559
3,200	4,720	6315	8,704	18,546	***218***	6396	8557	11,794	25,130
3,400	5,015	6709	9,248	19,705	***231***	6795	9091	12,531	26,700
3,600	5,310	7,104	9,792	20,864	***245***	7195	9626	13,268	28,271
3,800	5,605	7,499	10,336	22,024	***258***	7595	10161	14,005	29,843
4,000	5,900	7,985	10,880	23,286	***272***	7995	10820	14,742	31,553
4,200	6,195	8,384	11,424	24,450	***286***	8394	11360	15,480	33,130
4,400	6,490	8,784	11,968	25,615	***299***	8794	11902	16,217	34,708
4,600	6,785	9,183	12,512	26,779	***313***	9194	12443	16,954	36,286
4,800	7,080	9,582	13,056	27,943	***326***	9593	12984	17,691	37,863
5,000	7,376	10,120	13,600	29,322	***340***	9994	13713	18,428	39,731
5,200	7,671	10,525	14,144	30,495	***354***	10394	14261	19,165	41,321
5,400	7,966	10,930	14,688	31,668	***367***	10794	14810	19,902	42,910
5,600	8,261	11,334	15,232	32,841	***381***	11194	15358	20,639	44,500
5,800	8,556	11,739	15,776	34,014	***394***	11593	15906	21,376	46,089
6,000	8,851	12,215	16,320	34,696	***408***	11993	16551	22,114	47,013
6,200	9,146	12,622	16,864	36,135	***422***	12393	17103	22,851	48,963
6,400	9,441	13,029	17,408	37,300	***435***	12793	17654	23,588	50,542
6,600	9,736	13,437	17,952	38,466	***449***	13192	18207	24,325	52,121
6,800	10,031	13,844	18,496	39,632	***462***	13592	18759	25,062	53,701
7,000	10,326	14,330	19,040	40,914	***476***	13992	19417	25,799	55,438
7,200	10,621	14,739	19,584	42,083	***490***	14391	19971	26,536	57,022
7,400	10,916	15,149	20,128	43,252	***503***	14791	20527	27,273	58,606
7,600	11,211	15,558	20,672	44,421	***517***	15191	21081	28,011	60,190
7,800	11,506	15,968	21,216	45,590	***530***	15591	21637	28,748	61,774
8,000	11,801	16,500	21,760	46,859	***544***	15990	22358	29,485	63,494
8,200	12,096	16,913	22,304	48,030	***558***	16390	22917	30,222	65,081
8,400	12,391	17,325	22,848	49,202	***571***	16790	23475	30,959	66,669
8,600	12,686	17,738	23,392	50,373	***585***	17190	24035	31,696	68,255
8,800	12,981	18,150	23,936	51,545	***598***	17589	24593	32,433	69,843
9,000	13,276	18,625	24,480	52,799	***612***	17989	25237	33,170	71,543
9,200	13,571	19,039	25,024	53,972	***626***	18389	25798	33,908	73,132
9,400	13,866	19,453	25,568	55,146	***639***	18788	26359	34,645	74,723
9,600	14,161	19,867	26,112	56,319	***653***	19188	26920	35,382	76,312
9,800	14,456	20,281	26,656	57,492	***666***	19588	27481	36,119	77,902
10,000	14,751	20,625	27,200	59,401	***680***	19988	27947	36,856	80,488

AHX SERIES LOW CLEARANCE HYDRAULIC WRENCHES

Most Unique Yet Innovative Design

AHX SERIES FEATURES & SPECIFICATIONS

01. Unique Design Cylinder - Fit both the cylinder and link in confined areas.

02. Auto Engagement Rod - Automatically engages link on the first stroke.

03. Never-Lock Drive Segment - Ensures tool will NEVER lock on.

04. Multi-Tooth Ratchet - Allows for 27-degree torque stroke accuracy.

05. One Piece Drive Plate - Robust alloy provides for small nose radius.

06. Single Link Pin - Link to cylinder engagement, no tools required.

07. In-Line Reaction Pad - Assures torsion free reaction every time.

08. Steel Alignment Pin - Assures equal load displacement between side plates.

09. Innovative Design - Cylinder and link width are equal for tight fits.

10. 360° x 360° Swivel - Allows hose to be cleared on all applications.

11. Curved Slider - Prevents wear of piston and drive plate and reduces cost of repairs.

12. Nose Radius - Tight nose radius allows this tool to fit on limited access applications.

13. High Strength Construction - Both cylinder and cassette are manufactured from high strength, high grade aircraft alloy.

AHX SERIES TECHNICAL

Technical Data										
Model No.		AHX-0.75	AHX-1	AHX-1.5	AHX-2	AHX-4	AHX-8	AHX-16	AHX-32	AHX-45
Tool Hex mm / inch	From	13 1/2"	'13 1/2"	19 3/4"	19 3/4"	25 1"	50 1.7/8"	65 2.5/8"	80 3.1/8"	80 3.1/8"
	To	41 1.5/8"	41 .5/8"	46 1.5/8"	60 2.3/8"	80 3.1/8"	105 4"	115 4.5/8"	155 6.1/8"	155 6.1/8"
Min Torque N-m (ft/lbs)		55.58(41)	61.0(45)	135.5(100)	260(192)	540 (395)	1125 (830)	2115 (1560)	4365(3220)	6600(4865)
MAX Torque N-m (ft/lbs)		665 (490)	760 (560)	1350 (995)	2614(1928)	5355(3950)	11700(8630)	22506(16600)	48335(35650)	65595(47380)
Output Accuracy		+/-3%	+/-3%	+/-3%	+/-3%	+/-3%	+/-3%	+/-3%	+/-3%	+/-3%
Repeatability		100%	100%	100%	100%	100%	100%	100%	100%	100%
Duty Cycle		100%	100%	100%	100%	100%	100%	100%	100%	100%
Corrosion Protection	Standard									
Cylinder Weight Kg / Lbs		0.38/ (0.84)	0.50/ (1.1)	0.55/ (1.2)	1.59 / (3.50)	2.73 / (6.00)	5.32 / (11.70)	7.27 / (16.00)	11.82 / (26.00)	13.7/ (30.2)
Link Weight Kg / Lbs	From	0.47/ (1)	0.50/ (1)	0.60/ (1.3)	1.09 / (2.40)	2.45 / (5.40)	5.41 / (11.90)	9.55 / (21.00)	13.18 / (29.00)	13.18 / (29.00)
	To	0.47/ (1)	0.50/ (1)	0.90/ (2.0)	1.59 / (3.50)	3.45 / (7.60)	6.59 / (14.50)	12.73 / (2.00)	17.95 / (39.50)	17.95 / (39.50)

AHX SERIES DIMENSIONS

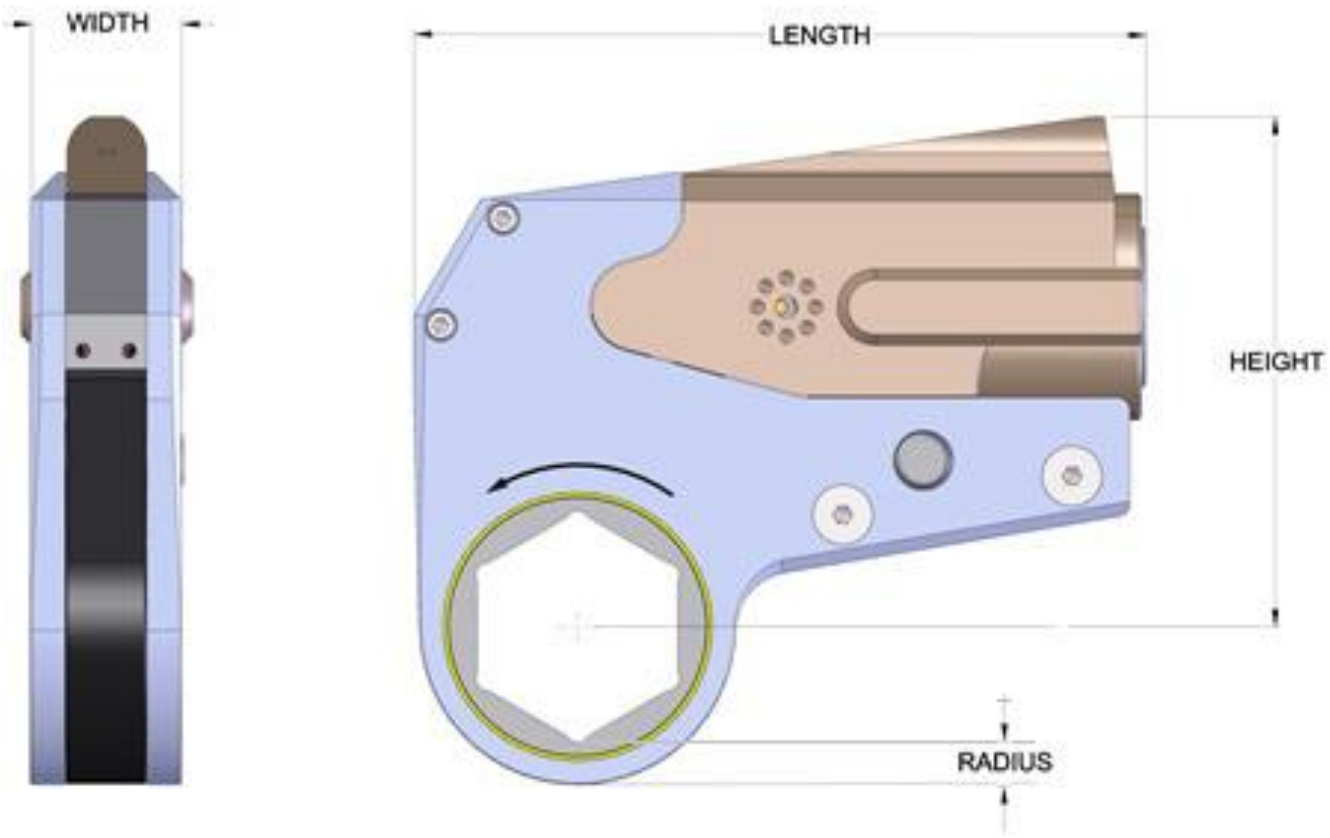

Dimensions																		
Model No.	AHX-0.75		AHX-1		AHX-1.5		AHX-2		AHX-4		AHX-8		AHX-16		AHX-32		AHX-45	
	MM	Inch	MM	Inch	MM	Inch	MM	Inch	MM	Inch	MM	Inch	MM	Inch	MM	Inch	MM	Inch
Length	108	4.25	111	4.37	107	4.2	167	6.57	203.2	8	253	9.96	330	13	390	15.35	450	17.71
Height	82.6	3.25	82.6	3.25	87	3.4	103	4.05	144	5.66	179.5	7.06	193.8	7.63	278	10.94	278	10.94
Width	18	0.7	19.8	0.78	28	1.1	38	1.49	50.7	1.99	59.5	2.34	65	2.56	84	3.3	84	3.3
Radius	5.8	0.23	5.8	0.23	7.5	0.3	9.3	0.36	11.85	0.46	13.9	0.54	16.8	0.66	23.75	0.94	23.75	0.94

AHX SERIES ACCESSORIES

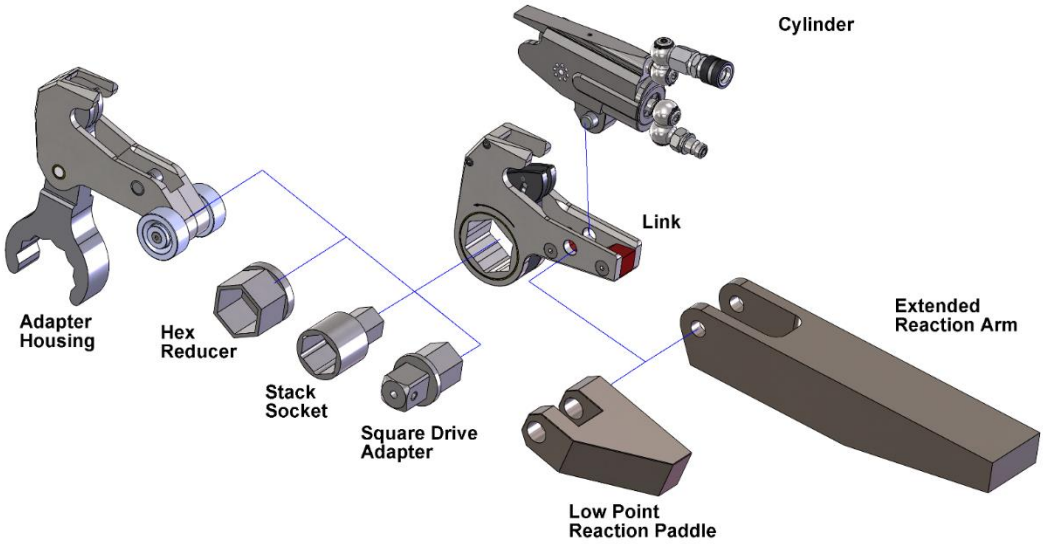

Low Point Reaction Arm

Tool Model	Low Point Reaction Arm Model	Length	Width	Height 1	Height 2
AHX-1	AHX-1-RP	69.3	16.5	23	49.8
AHX-2	AHX-2-RP	110.5	26.2	37.8	82.8
AHX-4	AHX-4-RP	143.5	31.2	51.3	107.4
AHX-8	AHX-8-RP	181.6	45.2	64.3	136
AHX-16	AHX-16-RP	230	63.8	77.2	161.5
AHX-32	AHX-32-RP	284.5	82.8	100.3	210.8
AHX-45	AHX-45-RP	30.5	82.8	100.3	210.8

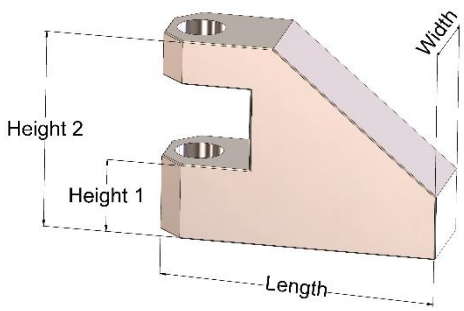

Extended Reaction Arm

Tool Model	Extended Reaction Arm Model	Length	Height 1	Width
AHX-1	AHX-1-EXT	343	31.8	31.8
AHX-2	AHX-2- EXT	503	39	48.3
AHX-4	AHX-4- EXT	515.4	52	61.0
AHX-8	AHX-8- EXT	529.6	64.0	77.0
AHX-16	AHX-16- EXT	546	77.2	92.7
AHX-32	AHX-32- EXT	566	100.3	114.8
AHX-45	AHX-45- EXT	566	100.3	114.8

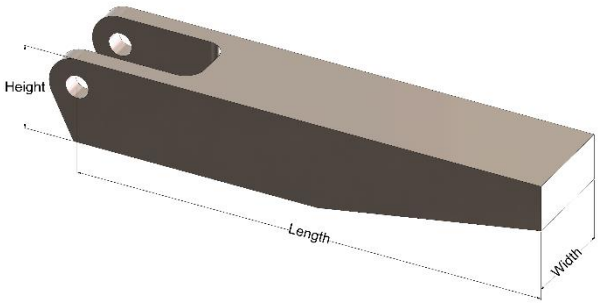

Hex To Square Drive Adaptor

Tool Model	Hex To Square Drive Adaptor Model
AHX-1	AHS1
AHX-2	AHS 2
AHX-4	AHS 4
AHX-8	AHS 8
AHX-16	AHS 16
AHX-32	AHS 32
AHX-45	AHS 45

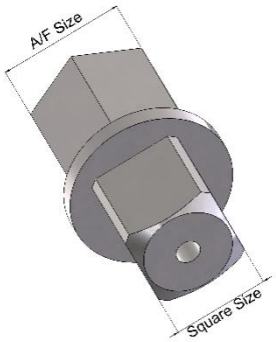

Hex Reducer

Tool Model	Hex Reducer Model
AHX-1	HR-1-#-#
AHX-2	HR-2-#-#
AHX-4	HR-4-#-#
AHX-8	HR-8-#-#
AHX-16	HR-16-#-#
AHX-32	HR-32-#-#
AHX-45	HR-45-#-#

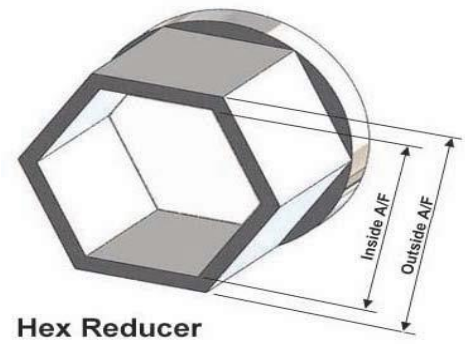

AHX SERIES TORQUE CONVERSION CHART

For Model AHX-1 to AHX-45

AHX Series Torque Conversion Chart

Bar /N.m												
Model	AHX-1		AHX-2		AHX-4	AHX-8	AHX-16		AHX-32		AHX-45	
Hex Sizes	1/2 " to 1 1/8"	1 3/16 " to 1 5/8"	3/4" to 1-13/16"	1-7/8" to 2-3/8"	All Hex Sizes	All Hex Sizes	2-5/8" to 3-15/16"	4" to 4-5/8"	2-7/16" to 4-5/8"	4-11/16" to 6-1/2"	2-7/16" to 4-5/8"	4-11/16" to 6-1/2"
	17 to 27 MM	30 to 41 MM	19 to 46MM	47 to 60MM	All Hex Sizes	All Hex Sizes	65 to 100MM	105 to 115MM	80 to 115MM	115 to 155MM	80 to 115MM	115 to 155MM
Bar	N.m	N.m	N.m	N.m	N.m	N.m	N.m	N.m	N.m	N.m	N.m	N.m
68	67	90	260	285	535	1,125	2,115	2,250	4,324	5,016	6,351	6,577
82	79	104	312	342	644	1,357	2,535	2,700	5,260	6,019	7,341	7,834
95	90	118	365	399	752	1,590	2,955	3,150	6,195	7,022	8,330	9,091
109	102	132	416	455	854	1,822	3,382	3, 600	7,130	8,025	9,320	10,347
122	114	146	469	512	962	2,055	3,802	4,051	8,066	9,028	10,309	11,604
136	126	160	522	569	1,071	2,288	4,229	4,501	8,996	10,031	11,303	12,858
150	138	176	572	626	1,179	2,528	4,650	4,951	9,871	11,035	12,444	14,152
163	149	190	625	683	1,288	2,768	5,070	5,401	10,747	12,038	13,586	15,447
177	160	206	678	740	1,389	3,008	5,490	5,851	11,623	13,041	14,727	16,742
190	171	220	728	797	1,498	3,248	5,917	6,301	12,499	14,044	15,869	18,036
204	183	235	784	868	1,606	3,489	6,337	6,751	13,374	15,047	17,010	19,331
218	196	252	832	923	1,715	3,762	6,764	4,826	14,250	16,050	18,195	20,608
231	208	268	885	981	1,823	4,034	7,185	7,651	15,126	17,053	19,380	21,885
245	221	285	937	1,038	1,925	4,307	7,605	8,101	16,002	18,057	20,564	23,162
258	233	300	990	1,097	2,033	4,579	8,032	8,551	16,877	19,060	21,749	24,439
272	246	317	1,045	1,159	2,142	4,853	8,452	9,015	17,895	20,063	22,938	25,716
286	259	333	1,093	1,212	2,250	5,063	8,879	9,466	18,790	21,066	24,078	26,995
299	271	349	1,145	1,270	2,359	5,275	9,299	9,916	19,685	22,069	25,218	28,275
313	284	366	1,197	1,328	2,460	5,485	9,720	10,368	20,579	23,072	26,358	29,555
326	296	381	1,250	1,385	2,569	5,696	10,147	10,818	21,474	24,075	27,498	30,834
340	308	396	1,307	1,450	2,677	5,908	10,567	11,333	22,367	25,079	28,644	32,114
354	320	412	1,353	1,507	2,786	6,152	10,987	11,786	23,266	26,082	29,739	33,398
367	331	426	1,406	1,566	2,894	6,396	11,414	12,240	24,165	27,085	30,943	34,682
381	344	442	1,457	1,624	2,996	6,640	11,834	12,692	25,064	28,088	32,092	35,965
394	355	456	1,510	1,682	3,104	6,884	12,261	13,147	25,962	29,091	33,242	37,249
408	368	472	1,567	1,742	3,213	7,128	12,682	13,692	26,861	30,094	34,394	38,533
422	380	488	1,613	1,799	3,321	7,334	13,102	14,148	27,719	31,097	35,506	39,825
435	392	503	1,666	1,857	3,430	7,540	13,522	14,604	28,577	32,101	36,617	41,117
449	404	520	1,718	1,914	3,531	7,747	13,949	15,061	29,435	33,104	37,729	42,409
462	416	535	1,769	1,972	3,640	7,953	14,369	15,518	30,460	34,107	38,841	43,700
476	428	551	1,829	2,033	3,748	8,161	14,796	15,883	31,153	35,110	39,956	44,992
490	441	567	1,873	2,089	3,857	8,386	15,217	16,342	32,044	36,113	41,113	46,284
503	452	582	1,926	2,146	3,965	8,611	15,637	16,796	32,934	37,116	42,269	47,576
517	465	598	1,979	2,204	4,067	8,837	16,064	17,250	33,825	38,119	43,425	48,868
530	477	613	2,029	2,262	4,175	9,062	16,484	17,630	34,716	39,123	44,582	50,160
544	489	628	2,090	2,325	4,284	9,289	16,911	18,314	35,605	40,126	45,738	51,452
558	502	644	2,134	2,379	4,392	9,520	17,331	18,772	36,495	41,129	46,852	52,702
571	513	659	2,187	2,437	4,501	9,754	17,752	19,231	37,386	42,132	47,964	53,952
585	525	674	2,238	2,494	4,602	9,985	18,172	19,687	38,277	43,135	49,075	55,201
598	536	689	2,291	2,553	4,711	10,219	18,599	20,146	39,167	44,138	50,187	56,451
612	548	705	2,352	2,615	4,819	10,452	19,019	20,361	40,058	45,141	51,296	57,701
626	561	720	2,394	2,669	4,928	10,701	19,446	20,814	40,947	46,145	52,470	59,007
639	572	735	2,447	2,726	5,029	10,951	19,866	21,267	41,837	47,148	53,644	60,312
653	585	751	2,498	2,784	5,138	11,200	20,287	21,718	42,726	48,151	54,818	61,617
666	596	765	2,551	2,843	5,246	11,449	20,714	22,171	43,615	49,154	55,992	62,923
680	608	781	2,614	2,908	5,355	11,699	21,141	22,503	44,504	50,157	57,166	64,228

AHX SERIES TORQUE CONVERSION CHART

For Model AHX-1 to AHX-45

AHX Series Torque Conversion Chart												
P.S.I./FT./lbs												
Model	**AHX-1**		**AHX-2**		**AHX-4**	**AHX-8**	**AHX-16**		**AHX-32**		**AHX-45**	
Hex Sizes	1/2 " to 1 1/8"	1 3/16 " to 1 5/8"	3/4" to 1-13/16"	1-7/8" to 2-3/8"	All Hex Sizes	All Hex Sizes	2-5/8" to 3-15/16"	4" to 4-5/8"	2-7/16" to 4-5/8"	4-11/16" to 6-1/2"	2-7/16" to 4-5/8"	4-11/16" to 6-1/2"
	17 to 27 MM	30 to 41 MM	19 to 46MM	47 to 60MM	All Hex Sizes	All Hex Sizes	65 to 100MM	105 to 115MM	80 to 115MM	115 to 155MM	80 to 115MM	115 to 155MM
PSI	Ft/lbs	Ft/lbs	Ft / lbs	Ft / lbs	Ft / lbs	Ft / lbs	Ft / lbs	Ft / lbs	Ft / lbs	Ft / lbs	Ft / lbs	Ft / lbs
1,000	49	66	192	210	395	830	1,560	1,660	3,190	3,700	4,685	4,852
1,200	58	77	230	252	475	1,001	1,870	1,992	3,880	4,440	5,415	5,779
1,400	66	87	269	294	555	1,173	2,180	2,324	4,570	5,180	6,145	6,706
1,600	75	97	307	336	630	1,344	2,495	2,656	5,260	5,920	6,875	7,633
1,800	84	108	346	378	710	1,516	2,805	2,988	5,950	6,660	7,605	8,560
2,000	93	118	385	420	790	1,688	3,120	3,320	6,636	7,400	8,338	9,485
2,200	102	130	422	462	870	1,865	3,430	3,652	7,282	8,140	9,180	10,440
2,400	110	140	461	504	950	2,042	3,740	3,984	7,928	8,880	10,022	11,395
2,600	118	152	500	546	1,025	2,219	4,050	4,316	8,574	9,620	10,864	12,350
2,800	126	162	537	588	1,105	2,396	4,365	4,648	9,220	10,360	11,706	13,305
3,000	135	173	578	640	1,185	2,574	4,675	4,980	9,866	11,100	12,548	14,260
3,200	145	186	614	681	1,265	2,775	4,990	3,560	10,512	11,840	13,422	15,202
3,400	153	198	653	724	1,345	2,976	5,300	5,644	11,158	12,580	14,296	16,144
3,600	163	210	691	766	1,420	3,177	5,610	5,976	11,804	13,320	15,170	17,086
3,800	172	221	730	809	1,500	3,378	5,925	6,308	12,450	14,060	16,044	18,028
4,000	181	234	771	855	1,580	3,580	6,235	6,650	13,201	14,800	16,921	18,970
4,200	191	246	806	894	1,660	3,735	6,550	6,983	13,861	15,540	17,762	19,914
4,400	200	257	845	937	1,740	3,891	6,860	7,315	14,521	16,280	18,603	20,858
4,600	209	270	883	980	1,815	4,046	7,170	7,648	15,181	17,020	19,444	21,802
4,800	218	281	922	1,022	1,895	4,202	7,485	7,980	15,841	17,760	20,285	22,746
5,000	227	292	964	1,070	1,975	4,358	7,795	8,360	16,500	18,500	21,130	23,690
5,200	236	304	998	1,112	2,055	4,538	8,105	8,694	17,163	19,240	21,978	24,637
5,400	244	314	1,037	1,155	2,135	4,718	8,420	9,029	17,826	19,980	22,826	25,584
5,600	254	326	1,075	1,198	2,210	4,898	8,730	9,363	18,489	20,720	23,674	26,531
5,800	262	336	1,114	1,241	2,290	5,078	9,045	9,698	19,152	21,460	24,522	27,478
6,000	271	348	1,156	1,285	2,370	5,258	9,355	10,100	19,815	22,200	25,372	28,425
6,200	280	360	1,190	1,327	2,450	5,410	9,665	10,437	20,448	22,940	26,192	29,378
6,400	289	371	1,229	1,370	2,530	5,562	9,975	10,773	21,081	23,680	27,012	30,331
6,600	298	384	1,267	1,412	2,605	5,715	10,290	11,110	21,714	24,420	27,832	31,284
6,800	307	395	1,305	1,455	2,685	5,867	10,600	11,447	22,470	25,160	28,652	32,237
7,000	316	406	1,349	1,500	2,765	6,020	10,915	11,720	22,981	25,900	29,475	33,190
7,200	325	418	1,382	1,541	2,845	6,186	11,225	12,055	23,638	26,640	30,328	34,143
7,400	333	429	1,421	1,583	2,925	6,352	11,535	12,390	24,295	27,380	31,181	35,096
7,600	343	441	1,460	1,626	3,000	6,519	11,850	12,725	24,952	28,120	32,034	36,049
7,800	352	452	1,497	1,669	3,080	6,685	12,160	13,005	25,609	28,860	32,887	37,002
8,000	361	463	1,542	1,715	3,160	6,852	12,475	13,510	26,265	29,600	33,740	37,955
8,200	370	475	1,574	1,755	3,240	7,023	12,785	13,848	26,922	30,340	34,562	38,877
8,400	378	486	1,613	1,798	3,320	7,195	13,095	14,186	27,579	31,080	35,382	39,799
8,600	387	497	1,651	1,840	3,395	7,366	13,405	14,523	28,236	31,820	36,202	40,721
8,800	395	508	1,690	1,883	3,475	7,538	13,720	14,861	28,893	32,560	37,022	41,643
9,000	404	520	1,735	1,929	3,555	7,710	14,030	15,020	29,550	33,300	37,840	42,565
9,200	414	531	1,766	1,969	3,635	7,894	14,345	15,354	30,206	34,040	38,706	43,528
9,400	422	542	1,805	2,011	3,710	8,078	14,655	15,688	30,862	34,780	39,572	44,454
9,600	431	554	1,843	2,054	3,790	8,262	14,965	16,021	31,518	35,520	40,438	45,454
9,800	440	564	1,882	2,097	3,870	8,446	15,280	16,355	32,174	36,260	41,304	46,417
10,000	448	576	1,928	2,145	3,950	8,630	15,595	16,600	32,830	37,000	42,170	47,380

AHX SERIES HEX LINK PART NUMBE

For Model AHX-0.75 to AHX-1.5

AHX-0.75 Link Number	Hex Size	AHX-1 Link Number	Hex Size	AHX-1.5 Link Number	Hex Size
AHX-0.75RL008	1/2"	AHX-1RL008	1/2"	AHX-1.5RL012	3/4"
AHX-0.75RL009	9/16"	AHX-1RL009	9/16"	AHX-1.5RL013	13/16"
AHX-0.75RL010	5/8"	AHX-1RL010	5/8"	AHX-1.5RL014	7/8"
AHX-0.75RL011	11/16"	AHX-1RL011	11/16"	AHX-1.5RL015	15/16"
AHX-0.75RL012	3/4"	AHX-1RL012	3/4"	AHX-1.5RL100	1"
AHX-0.75RL013	13/16"	AHX-1RL013	13/16"	AHX-1.5RL101	1.1/16"
AHX-0.75RL014	7/8"	AHX-1RL014	7/8"	AHX-1.5RL102	1.1/8"
AHX-0.75RL015	15/16"	AHX-1RL015	15/16"	AHX-1.5RL103	1.3/16"
AHX-0.75RL100	1"	AHX-1RL100	1"	AHX-1.5RL104	1.1/4"
AHX-0.75RL101	1.1/16"	AHX-1RL101	1.1/16"	AHX-1.5RL105	1.5/16"
AHX-0.75RL102	1.1/8"	AHX-1RL102	1.1/8"	AHX-1.5RL106	1.3/8"
AHX-0.75RL103	1.3/16"	AHX-1RL103	1.3/16"	AHX-1.5RL107	1.7/16"
AHX-0.75RL104	1.1/4"	AHX-1RL104	1.1/4"	AHX-1.5RL108	1.1/2"
AHX-0.75RL105	1.5/16"	AHX-1RL105	1.5/16"	AHX-1.5RL109	1.9/16"
AHX-0.75RL106	1.3/8"	AHX-1RL106	1.3/8"	AHX-1.5RL110	1.5/8"
AHX-0.75RL107	1.7/16"	AHX-1RL107	1.7/16"	AHX-1.5RL111	1.11/16"
AHX-0.75RL108	1.1/2"	AHX-1RL108	1.1/2"	AHX-1.5RL112	1.3/4"
AHX-0.75RL109	1.9/16"	AHX-1RL109	1.9/16"	AHX-1.5RL113	1.13/16"
AHX-0.75RL110	1.5/8"	AHX-1RL110	1.5/8"	AHX-1.5RL114	1.7/8"

AHX SERIES HEX LINK PART NUMBE

For Model AHX-2 to AHX-32

AHX-2 Link Number	Hex Size	AHX-4 Link Number	Hex Size	AHX-8 Link Number	Hex Size	AHX-16 Link Number	Hex Size	AHX-32 Link Number	Hex Size
AHX-2RL012	3/4”	AHX-4RL100	1”	AHX-8RL114	1.7/8”	AHX-16RL210	2.5/8”	AHX-32RL302	3.1/8”
AHX-2RL013	13/16”	AHX-4RL101	1.1/16”	AHX-8RL115	1.15/16”	AHX-16RL211	2.11/16”	AHX-32RL303	3.3/16”
AHX-2RL014	7/8”	AHX-4RL102	1.1/8”	AHX-8RL200	2”	AHX-16RL212	2.3/4”	AHX-32RL304	3.1/4”
AHX-2RL015	15/16”	AHX-4RL103	1.3/16”	AHX-8RL201	2.1/16”	AHX-16RL213	2.13/16”	AHX-32RL305	3.5/16”
AHX-2RL100	1”	AHX-4RL104	1.1/4”	AHX-8RL202	2.1/8”	AHX-16RL214	2.7/8”	AHX-32RL306	3.3/8”
AHX-2RL101	1.1/16”	AHX-4RL105	1.5/16”	AHX-8RL203	2.3/16”	AHX-16RL215	2.15/16”	AHX-32RL307	3.7/16”
AHX-2RL102	1.1/8”	AHX-4RL106	1.3/8”	AHX-8RL204	2.1/4”	AHX-16RL300	3”	AHX-32RL308	3.1/2”
AHX-2RL103	1.3/16”	AHX-4RL107	1.7/16”	AHX-8RL205	2.5/16”	AHX-16RL301	3.1/16”	AHX-32RL309	3.9/16”
AHX-2RL104	1.1/4”	AHX-4RL108	1.1/2”	AHX-8RL206	2.3/8”	AHX-16RL302	3.1/8”	AHX-32RL310	3.5/8”
AHX-2RL105	1.5/16”	AHX-4RL109	1.9/16”	AHX-8RL207	2.7/16”	AHX-16RL303	3.3/16”	AHX-32RL311	3.11/16”
AHX-2RL106	1.3/8”	AHX-4RL110	1.5/8”	AHX-8RL208	2.1/2”	AHX-16RL304	3.1/4”	AHX-32RL312	3.3/4”
AHX-2RL107	1.7/16”	AHX-4RL111	1.11/16”	AHX-8RL209	2.9/16”	AHX-16RL305	3.5/16”	AHX-32RL313	3.13/16”
AHX-2RL108	1.1/2”	AHX-4RL112	1.3/4”	AHX-8RL210	2.5/8”	AHX-16RL306	3.3/8”	AHX-32RL314	3.7/8”
AHX-2RL109	1.9/16”	AHX-4RL113	1.13/16”	AHX-8RL211	2.11/16”	AHX-16RL307	3.7/16”	AHX-32RL315	3.15/16”
AHX-2RL110	1.5/8”	AHX-4RL114	1.7/8”	AHX-8RL212	2.3/4”	AHX-16RL308	3.1/2”	AHX-32RL400	4”
AHX-2RL111	1.11/16”	AHX-4RL115	1.15/16”	AHX-8RL213	2.13/16”	AHX-16RL309	3.9/16”	AHX-32RL401	4.1/16”
AHX-2RL112	1.3/4”	AHX-4RL200	2”	AHX-8RL214	2.7/8”	AHX-16RL310	3.5/8”	AHX-32RL402	4.1/8”
AHX-2RL113	1.13/16”	AHX-4RL201	2.1/16”	AHX-8RL215	2.15/16”	AHX-16RL311	3.11/16”	AHX-32RL403	4.3/16”
AHX-2RL114	1.7/8”	AHX-4RL202	2.1/8”	AHX-8RL300	3”	AHX-16RL312	3.3/4”	AHX-32RL404	4.1/4”
AHX-2RL115	1.15/16”	AHX-4RL203	2.3/16”	AHX-8RL301	3.1/16”	AHX-16RL313	3.13/16”	AHX-32RL405	4.5/16”
AHX-2RL200	2”	AHX-4RL204	2.1/4”	AHX-8RL302	3.1/8”	AHX-16RL314	3.7/8”	AHX-32RL406	4.3/8”
AHX-2RL201	2.1/16”	AHX-4RL205	2.5/16”	AHX-8RL303	3.3/16”	AHX-16RL315	3.15/16”	AHX-32RL407	4.7/16”
AHX-2RL202	2.1/8”	AHX-4RL206	2.3/8”	AHX-8RL304	3.1/4”	AHX-16RL400	4”	AHX-32RL408	4.1/2”
AHX-2RL203	2.3/16”	AHX-4RL207	2.7/16”	AHX-8RL305	3.5/16”	AHX-16RL401	4.1/16”	AHX-32RL409	4.9/16”
AHX-2RL204	2.1/4”	AHX-4RL208	2.1/2”	AHX-8RL306	3.3/8”	AHX-16RL402	4.1/8”	AHX-32RL410	4.5/8”
AHX-2RL205	2.5/16”	AHX-4RL209	2.9/16”	AHX-8RL307	3.7/16”	AHX-16RL403	4.3/16”	AHX-32RL411	4.11/16”
AHX-2RL206	2.3/8”	AHX-4RL210	2.5/8”	AHX-8RL308	3.1/2”	AHX-16RL404	4.1/4”	AHX-32RL412	4.3/4”
		AHX-4RL211	2.11/16”	AHX-8RL309	3.9/16”	AHX-16RL405	4.5/16”	AHX-32RL413	4.13/16”
		AHX-4RL212	2.3/4”	AHX-8RL310	3.5/8”	AHX-16RL406	4.3/8”	AHX-32RL414	4.7/8”
		AHX-4RL213	2.13/16”	AHX-8RL311	3.11/16”	AHX-16RL407	4.7/16”	AHX-32RL415	4.15/16”
		AHX-4RL214	2.7/8”	AHX-8RL312	3.3/4”	AHX-16RL408	4.1/2”	AHX-32RL500	5”
		AHX-4RL215	2.15/16”	AHX-8RL313	3.13/16”	AHX-16RL409	4.9/16”	AHX-32RL501	5.1/16”
		AHX-4RL300	3”	AHX-8RL314	3.7/8”	AHX-16RL410	4.5/8”	AHX-32RL502	5.1/8”
		AHX-4RL301	3.1/16”	AHX-8RL315	3.15/16”			AHX-32RL503	5.3/16”
		AHX-4RL302	3.1/8”	AHX-8RL400	4”			AHX-32RL504	5.1/4”
								AHX-32RL505	5.5/16”
								AHX-32RL506	5.3/8”
								AHX-32RL507	5.7/16”
								AHX-32RL508	5.1/2”
								AHX-32RL509	5.9/16”
								AHX-32RL510	5.5/8”
								AHX-32RL511	5.11/16”
								AHX-32RL512	5.3/4”
								AHX-32RL513	5.13/16”
								AHX-32RL514	5.7/8”
								AHX-32RL515	5.15/16”
								AHX-32RL600	6”
								AHX-32RL601	6.1/16”
								AHX-32RL602	6.1/8”

QUADRA PORT SYSTEM

The Quadra-Port System eliminate the common "Criss-Cross" bolt tightening pattern that causes crushing or over torqueing of gaskets. With the Quadra-Port System multi torque wrenches are utilized along with our Quadra-Port Hydraulic Pumps. Once the wrenches are in place a single operator can apply even load at the push of a button. The Quadra-Port System will evenly close the gap and apply even torque up to +/- 3% fast and accurate.

Uneven load using one tool

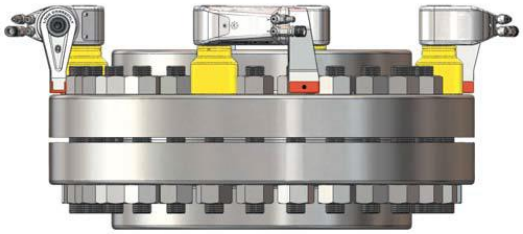

Even and precise loading with Quadra-Port 4 tool system

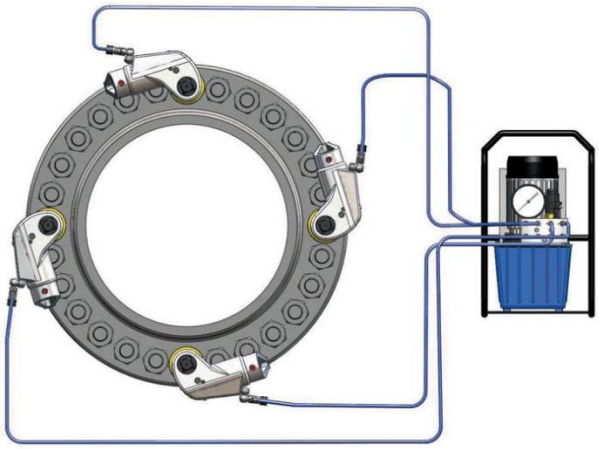

Quadra-Port four tool system

HYDRAULIC BOLTING SERVICES

We offer world class products for industries including oil and gas, power generation, wind energy, and mining.

From general purpose hydraulic bolt tensioners and torque wrenches to electric and pneumatic nut runners,

If our wide range of standard equipment is not suitable for your application, we will design and manufacture a custom application and requirement.

PUMPS USE WITH HYDRAULIC WRENCHES

AEP-1000 and AAP-1000

Heavy Duty High Flow High Speed Electrically and Pneumatically Operate Pump.

Mono Port

Quadra Port

AEP-1000 ELECTRIC	AAP-1000 PNEUMATIC
• Quadra-Port Multi-Port Manifold (Max. 4 Ports). • Cool running continuous duty axial piston pump. • Single phase induction motor. • 115V and 230V available. • Quiet operation (approx. 80 dBA @ 10,000 PSI). • Rugged remote pendant to control motor and valve. • Easily adjustable pressure control knob. • Auto-dump relieves oil pressure from hoses. • Completely enclosed motor and electronics. • 2 Gallon oil reservoir. • Precise PSI/BAR pressure gauge. • Quick-connect no-drip couplers with safety locking collar. • Supplied with dual non-conductive high-pressure hose with couplers. • Starts under full load. • Runs on reduced voltage	• Quadra-Port Multi-Port Manifold (Max. 4 Ports). • Cool running continuous duty axial piston pump. • Powerful 1.5HP industrial duty air motor. • Runs on 50 cfm / 80 PSI of air. • Quiet operation (approx. 80 dBA @ 10,000 PSI). • Rugged remote pendant to control motor and valve. • Easily adjustable pressure control knob. • Auto-dump relieves oil pressure from hoses. • Filter-lubricator for long trouble-free operation. • 2 Gallon oil reservoir. • Precise PSI/BAR pressure gauge. • Quick-connect no-drip couplers with safety locking collar. • Supplied with dual non-conductive high-pressure hose with couplers

POWER HYDRAULIC NUT SPLITTERS

NUT SPLITTER FEATURES & SPECIFICATIONS

Safe : No sparks. No flames. No risk to volatile surroundings. No hammers or impact needed. No flying fragments.

Fast : Cuts a 3” nut in 20 to 30 seconds vs. approx. 20 minutes with a hammer & chisel or torch.

Easy Set up : You can be up and away in less than 5 minutes. No Damage to bolt or stud threads by calibrating the chisel so that only the nut is cut.

Versatile : Power splitters cut the hardest nuts. The range of models offered and the range of each model compares very favourably vs. the competition.

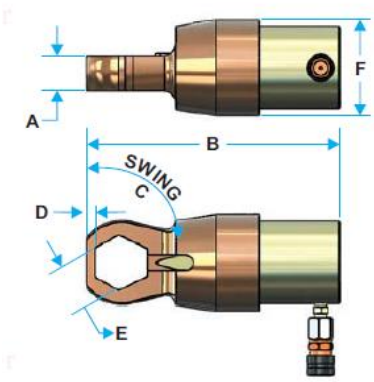

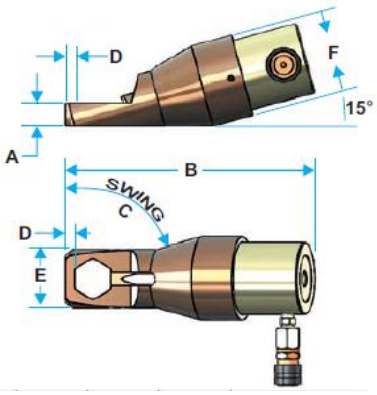

STANDARD NUT SPLITTERS

MODEL NO	STUD DIAMETER		NUT A/F		A	B	C	D	E	F	WEIGHT	
	mm	inch	mm	inch	mm	mm	mm	mm	mm	mm	kg	lbs
APS-105	11-12	7/16-7/8	16-36	5/8-1.7/16	38	271	60°	10	38	105	10.7	23.6
APS-200	22-32	7/8-1.1/4	36-51	1.7/16-2	38	287	45°	13	54	108	11.3	24.9
APS-204	32-38	1.1/4-1.1/2	46-60	1.13/16-2.3/8	57	385	30°	14	64	164	35.5	78.3
APS-210	35-45	1.3/8-2.1/4	57-70	2.1/4-2.3/4	57	398	30°	18	73	164	36.5	80.5
APS-308	45-57	1.3/4-2.1/4	70-89	2.3/4-3.1/2	78	460	30°	19	99	214	75.2	165.8
APS-314	50-64	2-2.1/4	79-89	3.1/8-3.7/8	80	488	30°	22	108	214	82	180.8
APS-404	64-70	2.1/2-2.3/4	95-108	3.3/4-4.1/4	95	579	60°	29	118	251	106	233.7
APS-500	76-83	3-3.1/4	114-127	4.1/2-5	105	590	60°	29	137	251	111	244.7
APS-506	83-89	3.1/4-3.1/2	124-136	4.7/8-5.3/58	105	598	60°	29	149	251	108.5	239.2

ANGLE HEAD NUT SPLITTER

MODEL NO	STUD DIAMETER		NUT A/F		A	B	C	D	E	F	WEIGHT	
	mm	inch	mm	inch	mm	mm	mm	mm	mm	mm	kg	lbs
APS-100AH	11-16	7/16-5/8	13-24	1/2-1	17.5	190	30°	6	65	72	4.5	9.9
APS-105AH	11-12	7/16-7/8	16-36	5/8-1.7/16	38	280	60°	10	70	105	11	24.3
APS-200AH	22-32	7/8-1.1/4	36-51	1.7/16-2	38	290	45°	13	95	108	12.5	27.6
APS-204AH	32-38	1.1/4-1.1/2	46-60	1.13/16-2.3/8	57	410	30°	15	108	164	38	83.8
APS-210AH	35-45	1.3/8-2.1/4	57-70	2.1/4-2.3/4	57	420	30°	18	130	164	40	88.2
APS-308AH	45-57	1.3/4-2.1/4	70-89	2.3/4-3.1/2	78	500	30°	20	160	214	78	172.0
APS-314AH	50-64	2-2.1/4	79-89	3.1/8-3.7/8	80	510	30°	23	175	214	86	189.6
APS-404AH	64-70	2.1/2-2.3/4	95-108	3.3/4-4.1/4	95	600	60°	32	210	251	112	246.9
APS-500AH	76-83	3-3.1/4	114-127	4.1/2-5	105	620	60°	34	230	251	118	260.1
APS-506AH	83-89	3.1/4-3.1/2	124-136	4.7/8-5.3/58	105	650	60°	36	250	251	124	273.4

POWER FLANGE SPREADERS

MANUAL AND HYDRAULIC POWER SPRADER

SPECIFICATION	AMS-10P		AHS-10P	
	IMPERIAL	METRIC	IMPERIAL	METRIC
WIDTH OF JAW	4.5"	114 mm	4.5"	114 mm
WIDTH OF BODY	4"	101 mm	4"	101 mm
JAW OPEN	3"	76.2 mm	3"	76.2 mm
JAW CLOSE	0.9"	2.3 mm	0.9"	2.3 mm
JAW GAP	1.5"	38.1 mm	1.5"	38.1 mm
WIGHT	17.0 Lbs	7.70 Kg	15.5 Lbs	7.0 Kg
LENGTH	14"	35.5 m	13.25'	33.6 m
FORCE	10000 Lbs	4.5 Ton	10000 Lbs	4.5 Ton

MANUAL SPRADER **HYDRAULIC SPRADER**

- **Manual Power-Spreader AMS10P : simply place the tips between the flange faces and turn the ratcheted handle. The ratcheting action is transformed into 4535 Kg (10,000 lbs.) Of spreading force and creates up to 76.2 mm (3”) of gap.**

- **Hydraulic Power-Spreader AHS10P : A hydraulic cylinder replaces the ratchet handle. A standard hand pump powers 1 Power-Spreader, or a pair, with ease. When supplied with 4535 kg (10,000 lbs) of force and 76.2 mm (3”) of gap; ample for gasket replacement or turning of blinds.**

HYDRAULIC FLANGE SPREADERS

- **Hydraulic Flange Spreaders are used for safety opening pipe flanges.**
- **Available in capacities of 5 tons and 10 tons the versatility of both models enables the user to open flanges up to 92mm thick.**
- **Operated with a standard hydraulic hand pump and connecting hose and supplied in a handy steel storage case,**
- **Hydraulic Flange Spreaders can be operated individually, or as a pair when opening large diameter flanges.**
- **Hydraulic Flange Spreaders takes minutes to open the toughest flanges without the risks of sparks caused by hammer blows and chisels.**

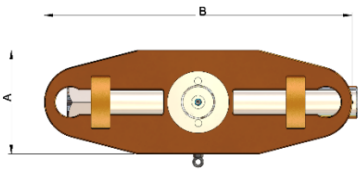

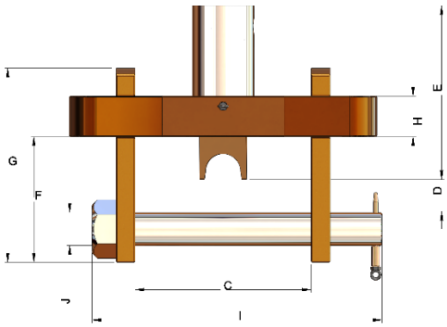

AFS-50 & AFS-100

DIMENSIONS:

MODEL NO	A	B	C		D	E	F	G	H	I	J
			MIN	MAX							
AFS-50	77	210	61	157	10	192	69	131	25	205	18
AFS-100	110	290	61	226	30	165	89	180	38	274	31

TECHNICAL :

MODEL NO	CAPACITY	STROKE	OIL CAPACITY	MAX.FLANGE THICKNESS	FLANGE DIAMETER	STUD SIZE	STANDARD WEDGE	OPTIONAL WEDGW
	TONNES	Mm	cm3	mm	mm(Inch)	mm	mm	mm
AFS-50	5	39	25	2 X 58	1150 mm(45")	19-29	3-29	30-56
AFS-100	10	55	78	2 X 93	1900 mm (75")	32-41	3-29	30-56

HYDRAULIC VERTICAL LIFTING WEDGE – AVW-10H

- **Lifting force - 16 Tons per tool.**
- **Lift in a straight vertical place.**
- **Access gap of only 3/8" (9.5mm) needed.**
- **3/4" (19.0mm) of vertical lift available from each step.**
- **Max. height of 50mm on 4th step.**
- **Automatic spring return retraction.**
- **Interlocking first step ensures safe hold.**
- **No Slippage due to locking.**

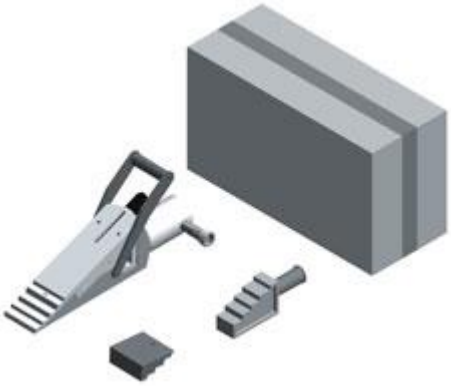

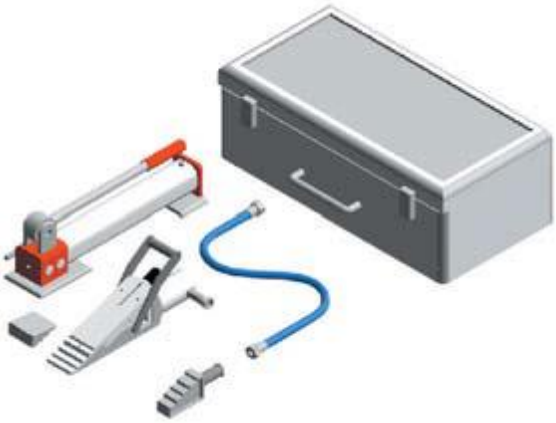

MINI KIT

- **1 x Hydraulic Vertical Lifting Wedge Assembly**
- **1 x Safety Block**
- **1 x Instruction Manual**
- **1 x Carry Case**

STANDRAD KIT

- **1 x Hydraulic Vertical Lifting Wedge Assembly**
- **1 x 10,000 psi (700 Bar) Two Stage Hydraulic Hand Pump**
- **1 x 10,000 psi (700 Bar) Hydraulic Hose Length 6 feet**
- **1 x Safety Block**
- **1 x Stepped Block**
- **1 x Instruction Manual**
- **1 x Carry Case**

HYDRAULIC SPREADING WEDGE – ASW-10H

- **Only requires an access gap of 1/4” (6 mm)**
- **Locking at first step ensures on slippage increased safety**
- **Robust Light weight Tool-Just 7.2 kg (16 lbs)**
- **10,000 psi (700 Bar) generates 14.0 Tons spreading force.**
- **Automatic Spring Return.**

.

MINI KIT

STANDRAD KIT

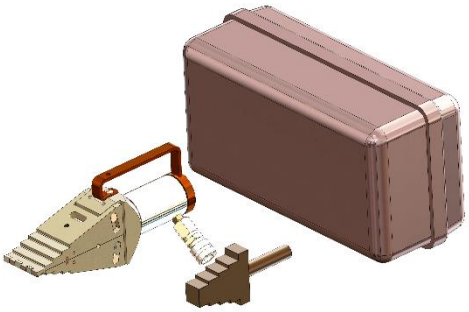

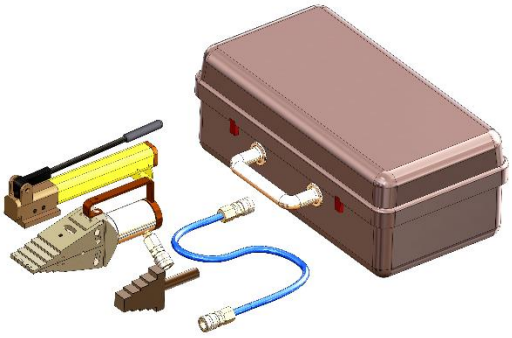

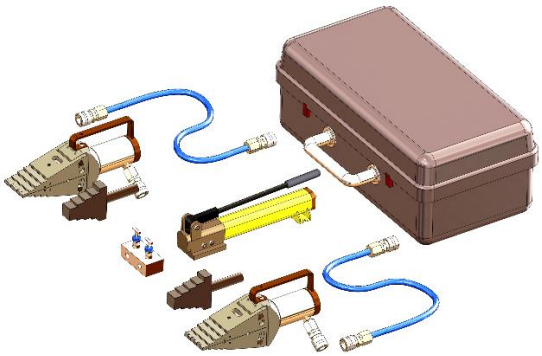

2 x Hydraulic Spreading Wedge Assembly
1 x 10,000 psi (700 Bar)
Two Stage Hydraulic Hand Pump
2 x 10,000 psi (700 Bar) Hydraulic Hoses
2 x Safety Block
1 x Instruction Manual
1 x Carry Case
1 x 10,000 psi Twin Valve manifold
Gross Weight: 28 kg

MAXI KIT

MECHANICAL CLICK TORQUE WRENCHES

Classic Mechanical Torque Wrenches have proved themselves reliable and accurate over many years of full service, mastering every conceivable nut tightening operation in all areas of industry.

Classic Mechanical Torque Wrenches are available in following three types

- **Standard Torque Wrenches:** **Adjustable click type torque wrenches**
- **Ratcheting Torque Wrenches:** **In built ratcheting mechanism provisional for ease of operation without effecting accuracy & life.**
- **Production Torque Wrenches:** **These torque wrenches are available in both standard & ratcheting but have a fixed torque value set to prevent any tempering by operation.**

- **3/8" Sq. Drive**

Ref.	Ratchet	Torque Range				Square Drive		Length		Weight	
		N.m	Kg.m	lbf.in	lbf.ft	mm	inch	mm	inch	kg	lbs
AVT-100A	NO	2.5-11	0.3-1.2	20-100	2-8	9.52	3/8	318	12.52	0.56	1.23
AVTR-100	YES	2.5-11	0.3-1.2	20-100	2-8	9.52	3/8	334	12.75	0.65	1.27
AVT-300A	NO	5-34	0.5-3.5	40-300	4-24	9.52	3/8	422	16.60	0.60	1.57
AVTR-300	YES	5-34	0.5-3.5	40-300	4-24	9.52	3/8	443	17.00	0.75	1.62
AVTR-600	YES	12-68	1.2-7	100-600	10-50	9.52	3/8	499	19.50	1.10	2.35

1/2” Sq. Drive

Ref.	Ratchet	Torque Range				Square Drive		Length		Weight	
		N.m	Kg.m	lbf.in	lbf.ft	mm	inch	mm	inch	kg	lbs
AVT-600A	NO	12-68	1.2-7	100-600	10-50	12.7	1/2	476	18.74	1.02	2.25
AVT-1200A	NO	25-135	3-14	200-1200	20-100	12.7	1/2	546	21.50	1.62	3.57
AVTR-1200	YES	25-135	3-14	200-1200	20-100	12.7	1/2	555	21.85	2.00	4.40
AVT-2000A	NO	50-225	5-23	400-2000	40-160	12.7	1/2	597	23.50	2.38	5.25
AVTR-2000	YES	50-225	5-23	400-2000	40-160	12.7	1/2	626	24.64	2.49	5.47
AVT-3000A	NO	70-330	7-35	600-3000	50-250	12.7	1/2	825	32.48	3.12	6.86
AVTR-3000	YES	70-330	7-35	600-3000	50-250	12.7	1/2	840	33.07	4.00	8.80

3/4" & 1” Sq. Drive

Ref.	Ratchet	Torque Range			Square Drive		Length		Weight	
		N.m	Kg.m	lbf.ft	mm	inch	mm	inch	kg	lbs
AVT-5000	NO	140-560	14-57	100-410	19.1	3/4	1130	44.49	5.90	13.00
AVTR-5000	YES	140-560	14-57	100-410	19.1	3/4	1210	47.64	6.58	14.50
AVT-7200	NO	200-810	22-82	150-600	19.1	3/4	1181	46.5	6.50	14.30
AVTR-7200	YES	200-810	22-82	150-600	19.1	3/4	1261	49.65	7.00	15.40
AVT-8400	NO	480-940	49-95	350-700	25.4	1	1397	55.00	11.30	25.00
AVTR-8400	YES	480-940	49-95	350-700	19.1	3/4	1471	57.91	12.70	28.00
AVT-12300	NO	700-1400	70-140	500-1000	25.4	1	1505	59.25	15.50	34.10
AVTR-12300	YES	700-1400	70-140	500-1000	25.4	1	1505	59.25	17.00	37.40

1” Sq. Drive

Ref.	Ratchet	Torque Range			Square Drive		Length		Weight	
		N.m	Kg.m	lbf.ft	mm	inch	mm	inch	kg	lbs
TQW-10	NO	1015-1900	105-195	750-1400	25.4	1	1356	53.38	16.50	36.30
TQW-R-10	YES	1015-1900	105-195	750-1400	25.4	1	1356	53.38	18.00	39.60
TQW-11	NO	1350-2700	135-275	1000-2000	25.4	1	1498	58.97	19.50	43.00
TQW-R-11	YES	1350-2700	135-275	1000-2000	25.4	1	1498	58.97	20.60	45.32

LIGHT WEIGHT TORQUE WRENCH FEATURES & SPECIFICATIONS.

01. **Material :** Light weight high strength alloy body reduces its weight to half of the equivalent conventional Torque Wrenches.

02. **Compact Size :** Compact in size with multiple extensions, ensures use at restricted places. Light Weight & Compact Packing makes handling & transportation easy.

03. **Torque Indication :** Short path actuation of gears provide clear impulse & audible signal on reaching set torque values.

04. **Variable Extension :** Extension bars can be adjusted to get different extension length as per the operator's requirement.

05. **Pin Locking :** Pin Lock mechanism at Sq. Drive for positive safe locking.

06. **Graduation :** Single Scale Graduation for clear reading,

07. **Longer Range :** 140 Nm to 3000 Nm covered in just four models.

08. **Accuracy :** Better than +_ 3% with very high repeatability.

09. **Calibration :** Calibration Traceable to National Standards.

10. **Ratcheting Action :** Suitable Ratchet Adaptors available to convert to ratchet type Torque Wrench.

Model No.	Range		Sq. Drive	OAL	Extension	Weight
	Nm	Kgf m	inch	mm	mm	kg
ALTW - 75	140 - 760	14 - 76	3/4	810	-	3.5
ALTW - 100	520 - 1000	52 - 100	3/4	810	+ 520	5.5
ALTW - 200	750 - 2000	75 - 200	1	935	+ 675 / 1075	11.5
ALTW - 300	1500 - 3000	150 - 300	1.1/2	935	+ 675 / 1075	14.0

BACKUP WRENCHES

BACKUP WEIGHT TORQUE WRENCH FEATURES & SPECIFICATIONS.

01.**Construction :** Heavy duty Ergonomic and Safe.

02. **Operation :** Totally Mechanical and No Hydraulic .

03. **Working :** Easy to release.

ABW-1 Wrench Handle							
Metric Sizes				Standard Sizes			
Part No.	mm	Part No.	mm	Part No.	inch	Part No.	inch
ABW-19M	19	ABW-46M	46	ABW-012	3/4	ABW-200	2
ABW-22M	22	ABW-50M	50	ABW-014	7/8	ABW-203	2.3/16
ABW-24M	24	ABW-55M	55	ABW-100	1	ABW-206	2.3/8
ABW-27M	27	ABW-60M	60	ABW-102	1.1/8	ABW-209	2.9/16
ABW-30M	30	ABW-65M	65	ABW-104	1.1/4	ABW-212	2.3/4
ABW-32M	32	ABW-70M	70	ABW-107	1.7/16	ABW-215	2.15/16
ABW-36M	36	ABW-75M	75	ABW-110	1.5/8	ABW-302	3.1/8
ABW-41M	41	ABW-80M	80	ABW-113	1.13/16		

PNEUMATIC TORQUE WRENCHES

A Pneumatic Torque Wrench is an air motor driven planetary gear box having a very high reduction ratio.
A reaction arm is provisioned with the gear box to absorb the torque reaction.
To avoid noise and hazardous hammering unlike impact wrench a pneumatic torque wrench is driven by continuous gearing. Therefore, a pneumatic torque wrench has an excellent accuracy and repeatability.

Pneumatic torque wrench offers following significant advantages:

01 Pneumatic is always known for clean and tidy way of working.
02 Combination of Air motor with planetary gear guarantees, a much faster, safe and economical operation.
03 Easy and fast operation.

AGNI SERIES PNEUMATIC TORQUE WRENCHES

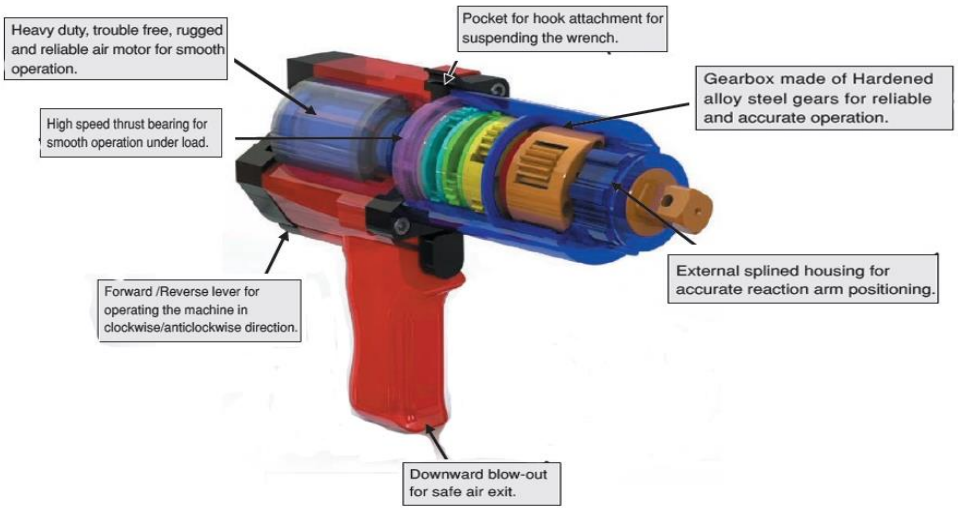

Pneumatic Torque wrenches are the preferred torqueing method to achieve productivity with less man-power.
Agni Pneumatic torque wrenches offer the reliable and dependable solution for the torqueing and un-torqueing of heavy duty bolts and nuts at various industries where speed, power, accuracy and safety are required.
Maximum operating pressure is 90 psi (6 bar).

Agni Pneumatic Wrench Technical Features And Specification :

01. **Light and Compact :** Light and compact tool design, suitable for variety of applications.
02. **Heavy Duty Gear Box :** Heavy duty gear box with thrust bearing for low friction and longer operational life.
03. **Single Trigger :** Single trigger for both forward and reverse operation.
04. **Integral Hook Point :** Integral hook for use of tool balancer etc.
05. **Low Noise Level :** Low noise level with no vibration.
06. **High Accuracy :** VEGA has an accuracy of better than + 5% with repeatability within 2% variation.
07. **Reaction Boot :** Reaction arm provisioned with removable boot for soft padding or extension as required.
08. **Customised Reaction Arm :** A wide range of standard and customized reaction arm available as per customer requirement.
09. **Wheel Extension :** Variety of wheel extension available for deep reach, where tool clearance is a problem.
10. **Accessories :** Accessories like universal socket, universal joint and thin wall sockets available.

Model No.	Min. Torque		Max. Torque		Free Speed	Square Drive	Weight
	Lbs	Nm	Lbs	Nm	rpm	inch	Kg.
AGNI - 15	30	45	130	180	42	1/2 - 3/4	4.2
AGNI - 50	125	170	500	680	25	1/2 - 3/4	4.5
AGNI - 75	185	250	750	1020	15	3/4 - 1	5.7
AGNI - 100	250	340	1040	1400	9	3/4 - 1	6.2
AGNI - 200	560	750	2200	3000	6	1 - 1.1/2	9.5
AGNI - 300	750	1010	3000	4050	3	1 - 1.1/2	10.5
AGNI - 400	1000	1350	4000	5400	2.5	1.1/2	12.5
AGNI - 500	1200	1650	4800	6500	2	1.1/2	12.5
AGNI - 600	1630	2200	6000	8100	1.5	1.1/2	12.5

Agni Series Accessories:

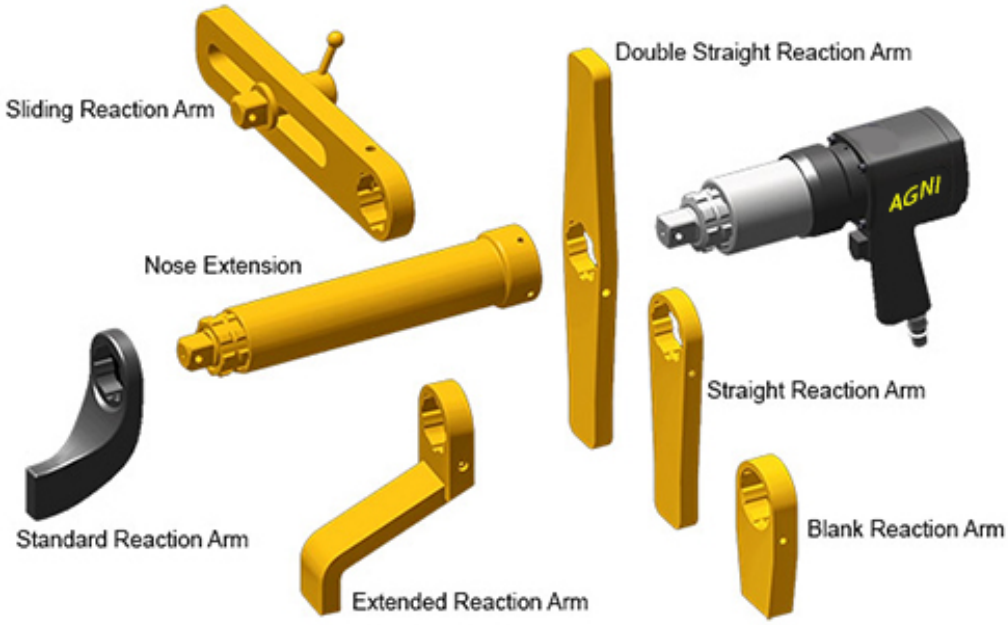

Wheel Extension:

Wheel extensions are used to reach the wheel hub bolts and nuts, where fitment of tool is not feasible. Asmi Engineering has complete range of wheel extensions as referred below:

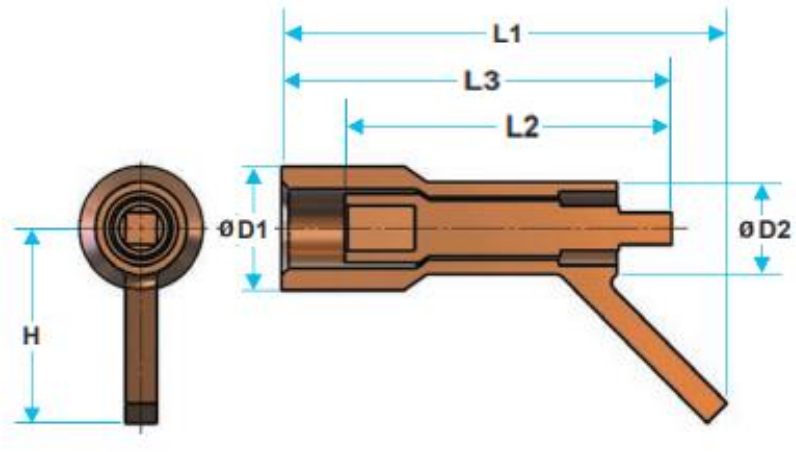

Model No.	Sq. Drive	L1	L2	L3	D1	D2	H
	inch	mm	mm	mm	mm	mm	mm
AWE 1206	3/4	210	150	185	70	45	100
AWE 1208	3/4	260	200	235	70	45	100
AWE 1210	3/4	310	250	285	70	45	100
AWE 1608	1	265	200	235	70	52	100
AWE 1610	1	315	250	285	70	52	100
AWE 1608H	1	265	200	235	90	60	130

AIR OPERATED FRL UNIT

It is used to regulate the air pressure and properly lubricate the air motor for ultimate life. The Regulator regulates the inlet air pressure and controls the output torque of pneumatic torque wrench. All pneumatic tools must be used with FRL Unit. It is strongly advised not to exceed the maximum operating pressure as specified in the individual tool certificate.

TORQUE MULTIPLIER

STANDRAD SERIES MECHANICAL MULTIPLIER

Torque Multiplier is a simple gear box, works on the principle of 'Epicyclic Gearing'. The given load at the input gets multiplied as per the multiplication factor & transmitted at the output, thereby with a minimum effort you achieve greater load.

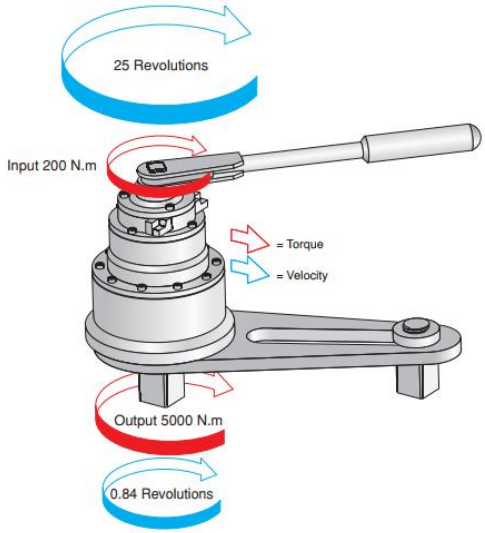

Advantages Of Torque Multipliers:

01. **The ratio stated is the true torque multiplication factor.**
02. **No correction charts are needed to determine torque output.**
03. **Strong, safe Anti Wind-Up Ratchet available on most models for safe and comfortable operation.**
04. **A wide range of alternative reaction arms are available as per customers requirement, making the Torque Multiplier adaptable to many applications.**

Hand Torque Multiplier:

Hand Torque Wrench Technical Features and Specification:

01.Accuracy better then ± 4%

02. Precision Tightening and loosening of all heavy-duty fasteners.

03. Low energy input with high torque.

04. Higher capacity multipliers are furnished with strong Anti-wind up mechanism.

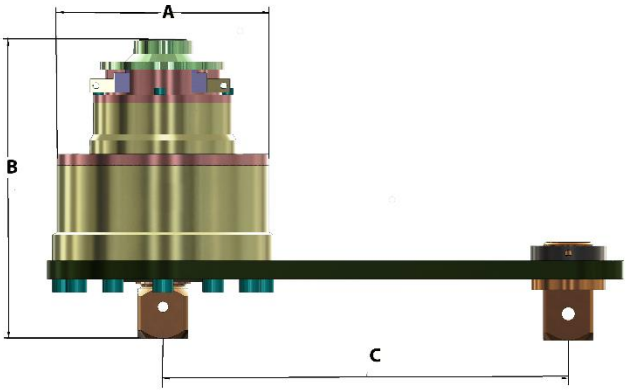

Model No.	Capacity		Ratio	Input Square	Output Square	A ø	B	C min	C max	Weight*	
	N.m	lbf.ft		inch	inch	mm	mm	mm	mm	kg	lbs
ATM-5	2700	2000	5	3/4	1	136	135	89	260	8.4	18.48
ATM-5/25	2700	2000	25	1/2	1	136	163	89	260	11.5	25.3
ATM-6	3400	2500	5	3/4	1.1/2	136	149	105	260	9.2	20.24
ATM-6/25	3400	2500	25	1/2	1.1/2	136	176	105	260	12	26.4
ATM-7	6000	4500	5	3/4	1.1/2	168	174	115	310	18	39.6
ATM-7/25	6000	4500	25	1/2	1.1/2	168	226	115	310	22	48.4
Fitted with Anti Wind											
ATM-9/25	9500	7000	25	3/4	1.1/2	195	256	150	350	33	72.6
Fitted with Anti Wind											
ATM-9/125	9500	7000	125	1/2	1.1/2	195	301	150	350	35.5	78.1
Fitted with Anti Wind											
ATM-11/25	17000	12500	25	3/4	2.1/2	220	360	164	480	52	114.4
Fitted with Anti Wind											
ATM-11/125	17000	12500	125	1/2	2.1/2	220	404	164	480	57	125.4
Fitted with Anti Wind											
ATM-13/125	47500	35000	125	3/4	2.1/2	315	550	164	480	80	176
Fitted with Anti Wind											

Mono Series Torque Multiplier

Mono Series Torque Wrench Technical Features and Specification:

01. Compact, Heavy Duty Torque Multiplier with a torque multiplication of 5:1.
02. Accuracy better than ± 4% with high repeatability.
03. Provided with detachable reaction handle.
04. Optional offset reaction arm also available on demand.

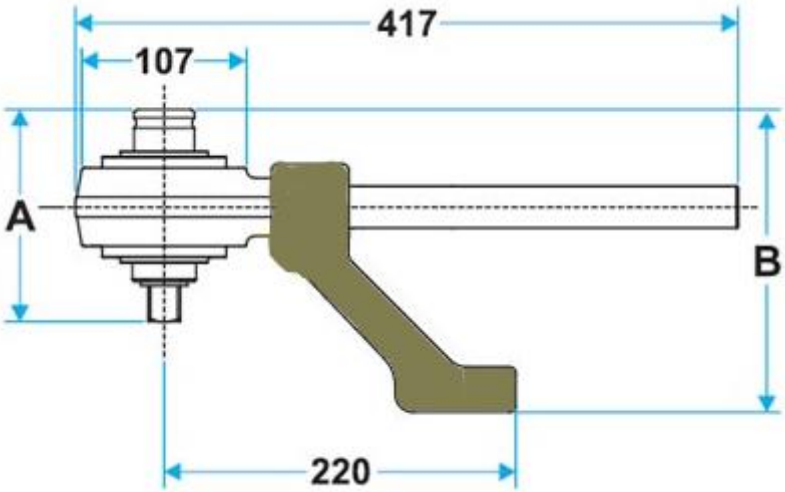

Model No.	Kgm.	Capacity		Ratio	Sq. Drive (inch)		A	B	Weight (Kg)	
		Lb.ft.	Nm.		input	Output	mm	mm	Without Box	With Box
MONO - 17	170	1250	1700	5:01	1/2	3/4	107	115	3.8	4.8
MONO - 28	280	2033	2750	5:01	3/4	1	107	126	3.9	4.9

HYDRAULIC BOLT TENSIONERS

- **Bolt tensioning is the preferred method of tightening bolts and studs on all critical applications.**
- **Bolt tensioners are designed for operation in a wide variety of applications including pipeline flanges, heat exchangers, pressure vessels, compressor covers, boiler feed pumps, windmills and many others.**
- **We provide a comprehensive range of bolt tensioners for optimum solutions to bolt tensioning requirements.**
- **Our Bolt tensioners and accessories are CE marked in accordance with Pressure Equipment and Machinery Directives, as applicable. In comparison to traditional tightening methods, tightening with bolt tensioners offers significant advantages:**
- **No torsional loading of fasteners.**
- **Direct loading - no damage to assembly.**
- **Easy and fast operation with very high accuracy and repeatability.**
- **Automation feasible and can be used for critical applications.**
- **AHT tensioners are designed to provide a wide range of flexibility, covering stud sizes 3/4” to 5.3/4” (M-18 to M-150).**

AHT SERIES TOP SIDE BOLT TENSIONERS:

The AHT Series Bolt Tensioner is very simple to use and consists of only four parts

AHT Series Top Side Bolt Tensioner Technical Features and Specification:

- **Versatile Design: AHT Series standard top tensioners are designed to provide wide range of stud sizes covering from 3/4" to 5.3/4" in inch and (M-16 to M-150) in mm. Different stud sizes are accommodated by simply changing the adaptor kit consisting puller, bridge and nut driver keeping same load cell.**
- **Hight Strength Alloy Steel: AHT tensioner are manufactured from High strength alloy steel as it is operated at max pressure of 1500bar for long lasting trouble-free performance.**
- **Multi Tensioning: AHT series tensioners can be connected and simultaneously operated by using high pressure link hose. This ensures equal tightening of all bolts ion single cycle.**
- **Floating Piston: AHT has the unique piston design allows 2° tilt without any loss of load, it's prevents piston bore damage.**
- **Stroke Indicator: AHT series tensioners have external stroke of 15mm. The internal stroke indicator ensures safe operation (A RED Line on Piston) allow the piston stroke to be viewed while tensioning is in progress.**
- **Safety in Piston stroke: AHT series while tensioning even of over stroke the high-pressure fluid will be release from the inner side of load cell saving operator from any protentional exposure.**

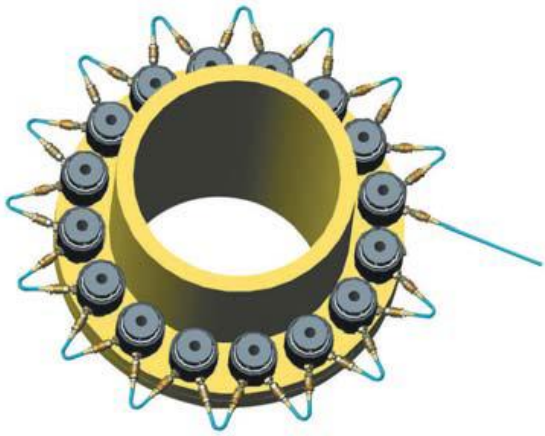

ASS SUB SEA BOLT TENSIONERS:

- **ASS Series Bolt Tensioners are specially designed for subsea applications.**
- **ASS Tensioners are suitable for higher pressure rating flanges**
- **Its ergonomic design makes it very easy to handle and use by divers under the harsh sea conditions.**
- **ASS tensioners are designed to provide a wide range of flexibility, covering stud sizes 3/4” to 3.1/2” (M-18 to M-85).**

The tool consists of two basic parts - Tensioning Unit and Lock Nut

TRUST, KNOWLEDGE & BELIEF

M/s Asmi Engineering

Office: 236/B-wing, 9234, Swdham Society.
Kannamwar Nagar-2, Vikhroli (East), Mumbai - 400083.

Factory : Unit No.11, Digha Co-operative Industrial Premises Society Ltd,
Plot No - 50, MIDC, Rabale, Behind Shivaji Flour Mill,
Diva Naka,Thane Belapur Road,
Before Rabale Police Station,
Navi Mumbai-400 708. India

Contacts : +91-8828142706 +91-9167108122

Email : asmiengineering@yahoo.com

Website : http://www.asmiengineering.tradeindia.com.

ASMI ENGINEERING