WORLD BRAND SELF-PROPELLED FULL FEEDING COMBINE HARVESTER

PART CATALOGUE

(4LZ-4.0E RUILONG SERIES)

Jiangsu World Agriculture Machinery CO., LTD

(Version 2021, First Edition)

Prologue

The World Ruilong series combine harvester was designed and produced by Jiangsu World Agriculture Machinery Co., Ltd. With decades of research, development and practice, this series combine harvester has the characteristics of simple structure, convenient maintenance, high work efficiency, low failure rate, high cleanliness rate of grain and so on. It is suitable for harvesting rice, wheat, corn, soybeans, millet, sunflower seeds and other crops.

This manual is made according to the product drawings of World Ruilong series combine harvester, which can be used by the user to maintain and repair the harvester, select and purchase the spare parts, and can also help the user to understand the internal and external structure of the harvester.

This manual describes the components of the spare parts through illustrations. Each illustration is attached with a detailed parts list with the name and quantity of the parts. About the spare parts code, “GB” is the national standard of China, and “JB” is the standard issued by the former Ministry of Mechanical Industry of China. Therefore, when ordering spare parts, please write down the standard of the spare parts.

When purchasing the spare parts of World Ruilong series combine harvester, please indicate the harvester model, production date and factory number. According to this drawing book, you can find the spare parts name and its code, then describe the spare parts which you need accurately and completely, so that we can better serve you. Please comply with the following requirements to place an order for spare parts:

Page Number + Serial Number + Part Number + Part Name + Quantity

With the development of science and technology and the practical using requirements, the World Ruilong series combine harvester will be continuously improved and perfected, which may cause a little difference between the products and the catalog. Please take the actual object of the harvester product as the standard. If it is unclear, please contact Jiangsu World Agriculture Machinery Co., Ltd. (Tel: +86-0511-8801 2230) or our local dealer. Changes made to the product after its improvement will be revised in new parts catalog. Please understand us if there has no prior notice.

As this book involves a lot of contents, it is inevitable that there are deficiencies. We sincerely hope that our customers will give us your suggestions on product quality, performance and structure in a timely manner, so that we can further improve our products and perfect the using technology.

Jiangsu World Agriculture Machinery Co., Ltd. Owns the copyright, change and interpretation rights of this spare parts catalog. No unit or individual may reprint, publish or copy this parts catalog without authorization.

Jiangsu World Agriculture Machinery Co., Ltd.

2021-01-01

Content

No.	Description	Page No.
1	Header and Conveyor	1
2	Thresher Part	41
3	Chassis Part	117
4	Grain Tank	163
5	Hydraulic Part	203
6	Operation Part	215
7	Engine Part	260
8	Electrical Part	298

Ⅰ.Header and Conveyor

Header and Conveyor W2.5E-01XCP-00

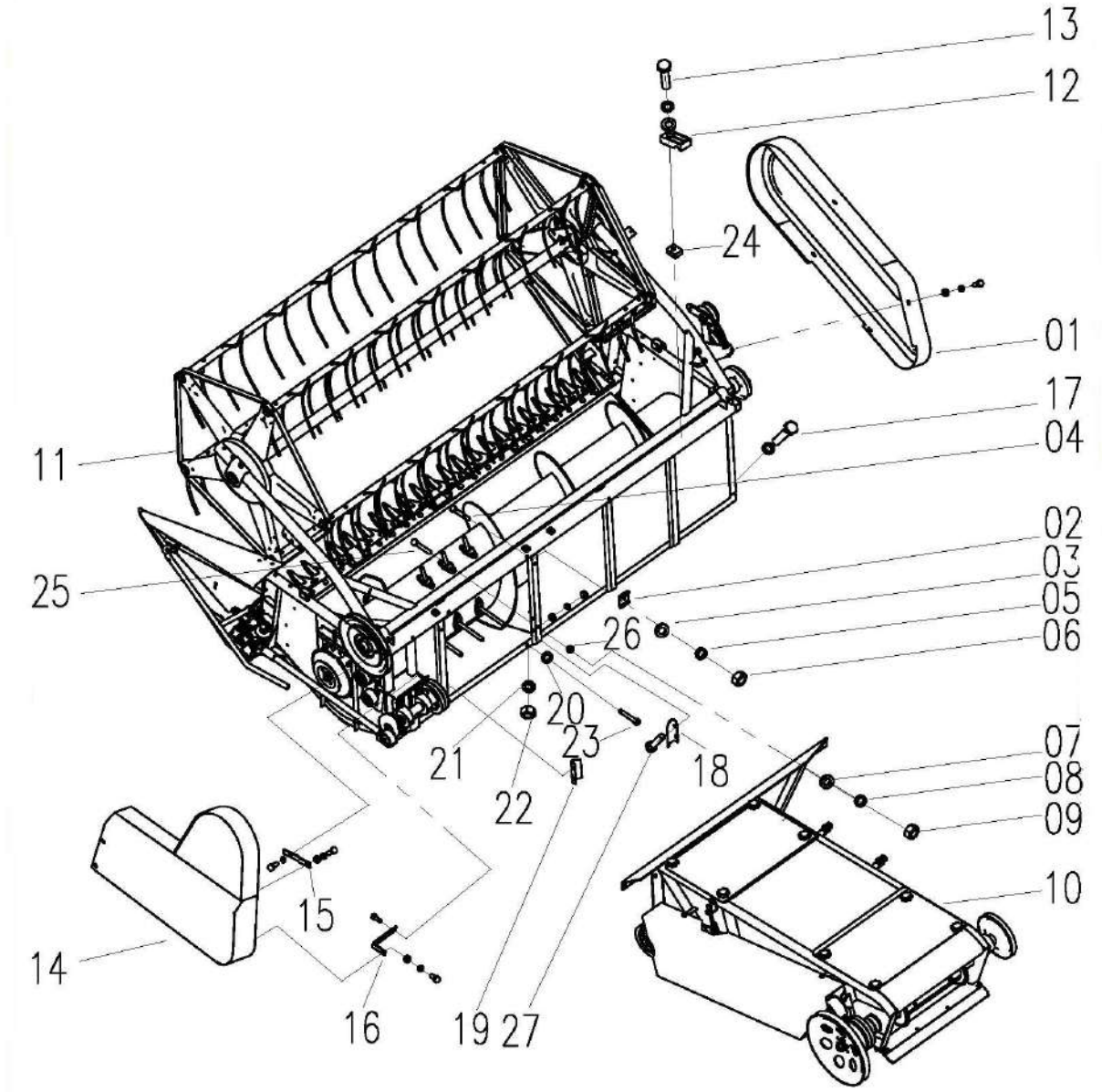

Header and Conveyor W2.5E-01XCP-00				
No.	**Description**	**Qty**	**Part Code**	**Remark**
1	Right Cover, Header	1	W2.0-01-06A-00	
2	Plate (2)	9	W2.5E-01B-26	
3	Gasket (1)	5	W2.2-01-20	
4	Bolt M10×95	5	GB/T5782	
5	Washer 10	10	GB/T93	
6	Nut M10	10	GB/T6170	
7	Washer 8	19	GB/T96	
8	Washer 8	24	GB/T93	
9	Nut M8	10	GB/T6170	
10	Conveyor Assy	1	W2.5E-01XCT-02-00	
11	Header Assy (2.1m)	1	W2.5E-01XCT-01-00	
12	Pipe Clamp	8	W2.5E-01B-28	
13	Bolt M8×20	16	GB/T5783	
14	Left Cover, Header	1	W2.0-01-03-00	
15	Rear Frame, Cover	1	W2.0-01-07-00	
16	Rear Frame, Cover	1	W2.5E-01B-10	
17	Bolt M8×25	4	GB/T5783	
18	Feeding Plate, Right	1	W3.5-01A-12	
19	Feeding Plate, Left	1	W3.5-01A-11	
20	Bolt M10×75	5	GB/T5782	
21	Washer 10	5	GB/T97.1	
22	Plate	2	W2.5E-01XCT-10	
23	Washer 10	2	GB/T96	
24	Frame	1	W2.5E-01B-01-24	Sunroof
25	Bolt M8×55	4	GB/T12	
26	Plate (1)	4	W2.5E-01B-25	
27	Bolt M8×55	4	GB/T5783	

Header Assy（RuiLong 2.1m Header）W2.5E-01XCT-01-00

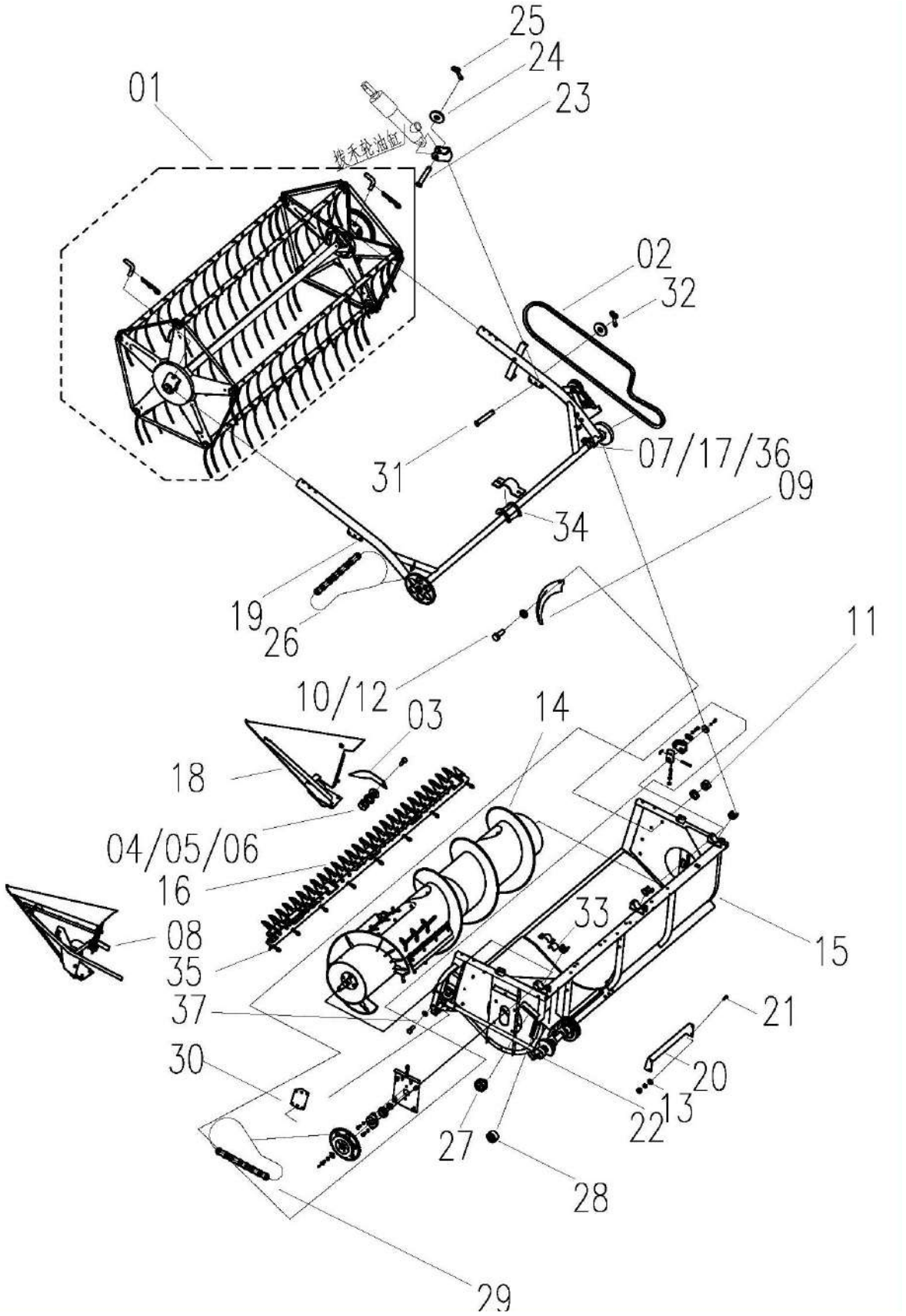

Header Assy（RuiLong 2.1m header）W2.5E-01XCT-01-00				
No.	**Description**	**Qty**	**Part Code**	**Remark**
01	Reel Assy	1	W2.5E-01XCP-01-05-00	
02	Reel Belt	1	W2.5E-01XCP-01-18	
03	Small Cover	1	W2.5E-01M-01-09	
04	Bolt M8×20	4	GB/T5783-86	
05	Nut M8	8	GB/T6170-86	
06	Washer 8	10	GB/T93-87	
07	Washer 8	18	GB/T97.1-85	
08	Left Divider Assy	1	W2.5E-01XCT-01-08A-00	
09	Anti-straw Plate, Auger	2	L20.1-05	
10	Bolt M6×16	8	GB/T5783-86	
11	Nut M6	8	GB/T6170-86	
12	Washer 6	8	GB/T93-87	
13	Washer 6	8	GB/T97.1-85	
14	Auger Assy, Header	1	W2.5E-01XC-01A-02-00	
15	Frame Assy, Header	1	W2.5E-01XCT-01A-01-00	
16	Cutter Assy	1	W2.5E-01XC-01-03 -00	
17	Press Plate	4	W2.5E-01B-01-20A	
18	Right Divider Assy	1	W2.5E-01XCT-01-06A-00	
19	Transmission Assy, Reel	1	W2.5E-01XCT-01-04C-00	
20	Baffle Weld	1	W2.5E-01B-01-50-00	
21	Bolt M6×18	3	GB/T5783-86	
22	Cutter Driven Assy	1	W2.5E-01B-01-07-00	
23	Pin Shaft B12×40	2	GB/T882-86	
24	Washer 12	2	GB/T97.1-85	
25	Pin 3.2×28	4	GB/T91-86	
26	Chain 08b-1×118	1	GB/T1243.1-83	
27	Tension Pulley Assy	1	W2.5E-01B-01-15-00	
28	Tension Pulley Assy	1	W2.5E-01B-01-11-00	
29	Chain 08b-1×98	1	GB/T1243.1-83	
30	Connecting Plate Weld	1	W2.0-01-01-12-00	
31	Pin Shaft B10×48	2	GB/T882-86	
32	Washer 10	2	GB/T97.1-85	
33	Nylon Sleeve A	4	W2.5E-01B-01-21	
34	Nylon Sleeve B	4	W2.5E-01B-01-22	
35	Adjustment Gasket	On demand	W2.5E-01B-01-23	
36	Bolt M8×25	8	GB/T5783	
37	Frame Assy	1	W2.5Y-01T-01-12-00	

Reel Assy W2.5E-01XCP-01-05-00

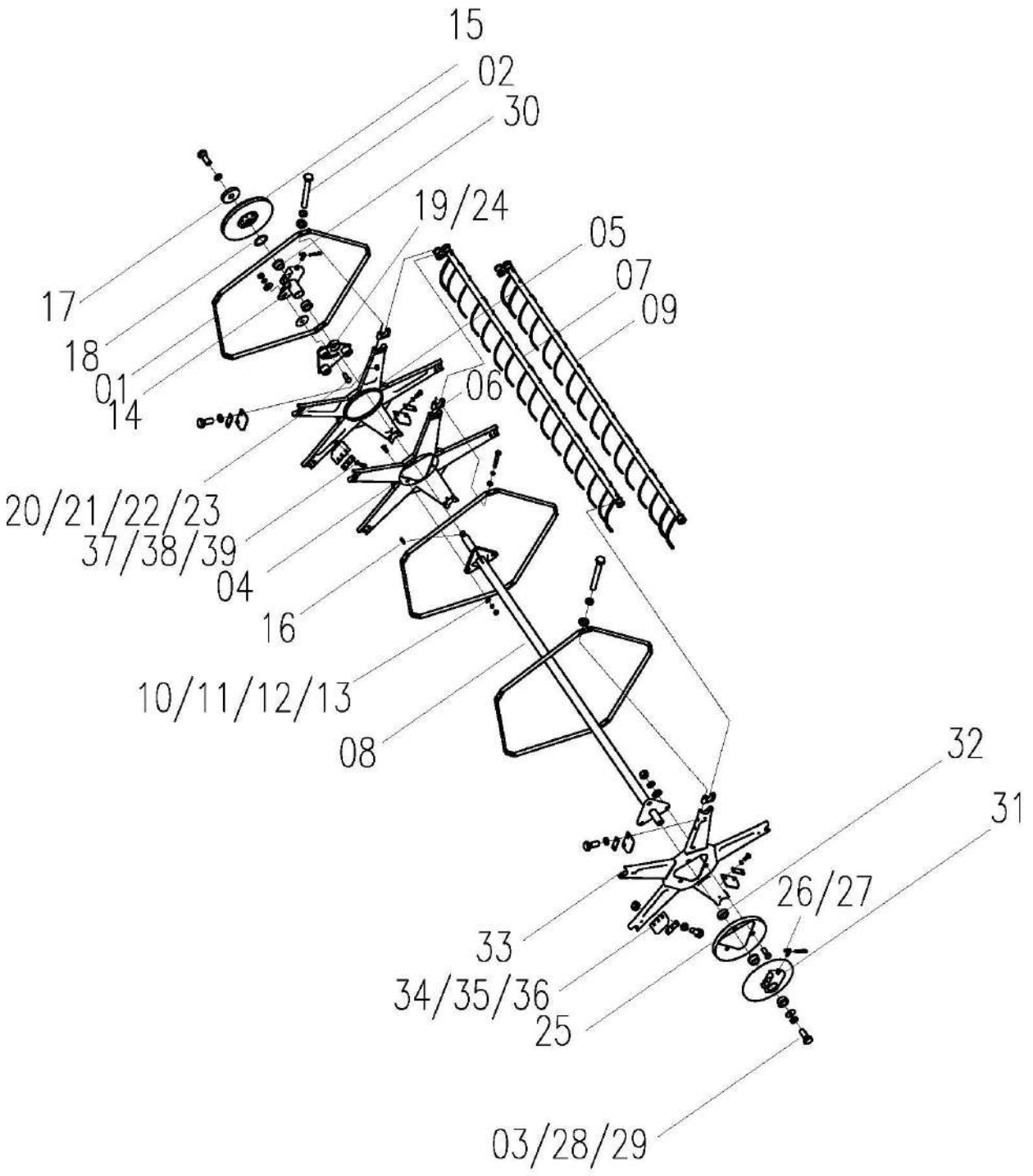

Reel Assy W2.5E-01XCP-01-05-00				
No.	**Description**	**Qty**	**Part Code**	**Remark**
01	Stiffened Plate	15	W2.5E-01M-01-05-10	
02	Bolt M8×70	30	GB/T5783	
03	Washer 8	48	GB/T93	
04	Eccentric Plate Weld	1	W2.5E-01M-01-05-02－00	
05	Plate	1	W2.5E-01M-01-05-01-00	
06	Nylon Seat	15	W2.0B-01B-01-05Q-13	
07	Reel Bar Assy (Ⅰ)	2	W2.5E-01XC-01-05-06-00	
08	Shaft Weld, Middle	1	W2.5E-01XC-01-05-17-00	
09	Reel Bar Assy (Ⅱ)	3	W2.5E-01XC-01-05-15-00	
10	Bolt M12×30	6	GB/T5783	
11	Washer 12	6	GB/T97.1	
12	Washer 12	6	GB/T93	
13	Nut M12	6	GB/T6170	
14	Shaft Seat Assy, Right	1	W2.0B-01B-01-05Q-03-00	
15	Belt Pulley Weld, Reel	1	W2.5E-01XCP-01-05-03-00	
16	Key C8×32	1	GB/T1096	
17	Retaining Ring for Shaft	1	L1.8A-01-23-13	
18	Retaining Ring	1	W2.0B-01B-01-05Q-16	
19	Eccentric Plate, Adjusting	1	W2.0B-01B-01-05Q-11-00	
20	Bolt M10×30	1	GB/T12	
21	Big Washer 10	1	GB/T96	
22	Washer 10	1	GB/T93	
23	Nut M10	1	GB/T6170	
24	Eccentric Roller Assy	3	W2.0B-01B-01-05Q-12-00	
25	Anti-Straw Plate	1	W2.0B-01B-01-05-08	
26	Hook	2	W.1.2-10	
27	Spring Pin	2	W.1.2-11	
28	Bolt M8×20	2	GB/T5783	
29	Retaining Ring	1	WD.1FG.39-06	
30	Sleeve, Wear Protection	4	W.1.2-12	
31	Shaft Seat Weld, Left	1	W2.0B-01B-01-05Q-07-00	
32	Sleeve	1	W2.0B-01B-01-05Q-25	
33	Plate weld, Left	1	W2.5E-01M-01-05-14-00	
34	Plate, Anti-straw	6	W2.0B-01B-01-05Q-19	
35	Press Plate	6	W2.0B-01B-01-05Q-20	
36	Plate B, Anti-straw	6	W2.0B-01B-01-05Q-21	
37	Gasket 8	30	GB/T97.1	
38	Bolt M6×25	18	GB/T5783	
39	Nut M6	12	GB/T6170	

Reel Assy W2.5E-01XCP-01-05-00

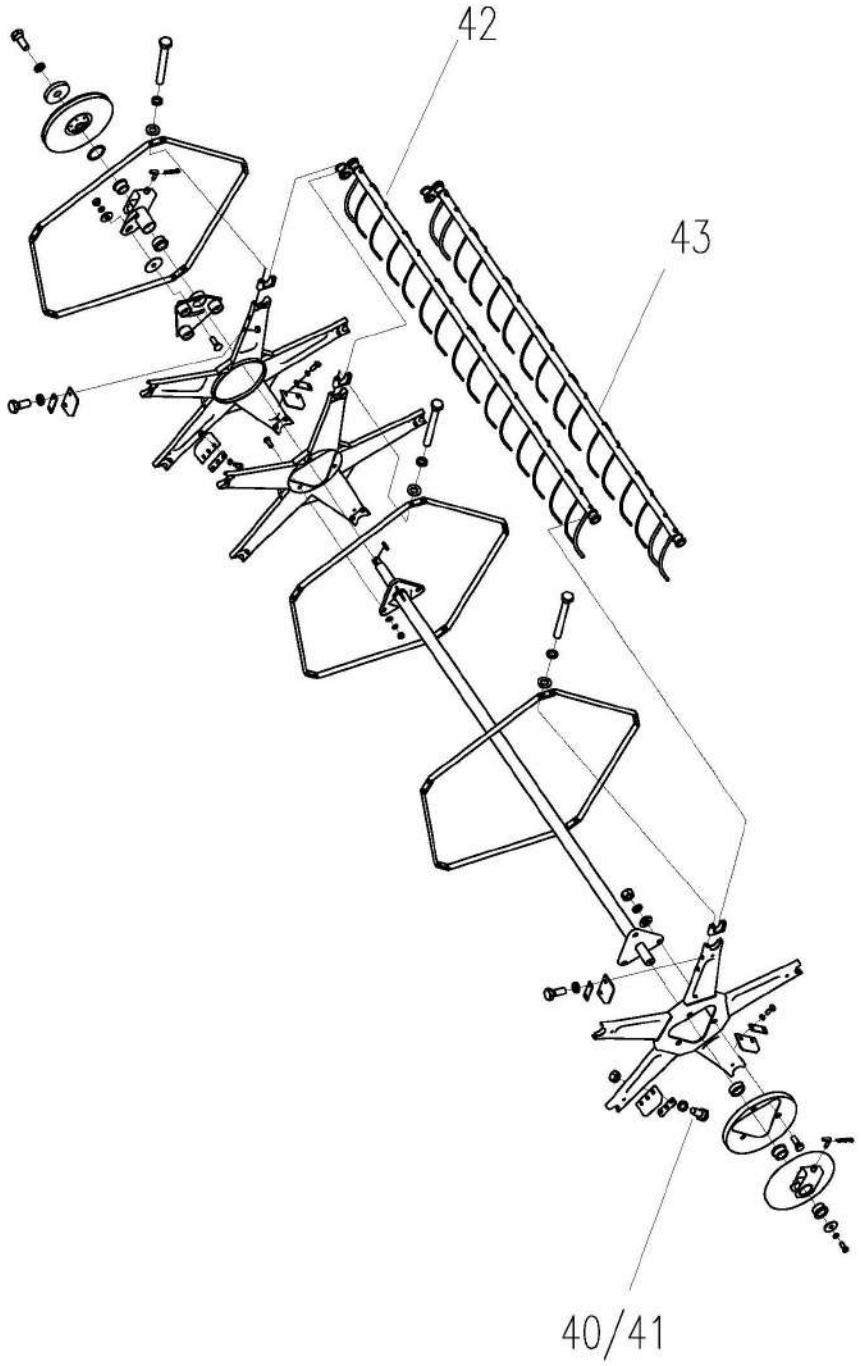

Reel Assy W2.5E-01XCP-01-05-00

No.	Description	Qty	Part Code	Remark
40	Washer 6	18	GB/T96	
41	Washer 6	18	GB/T93	
42	Reel Bar Assy 1	2	W2.5E-01XCD-01-05-06-00	
43	Reel Bar Assy 2	3	W2.5E-01XCD-01-05-15-00	

Reel Bar Assy（Rui Long 2.1m Header optional 1）

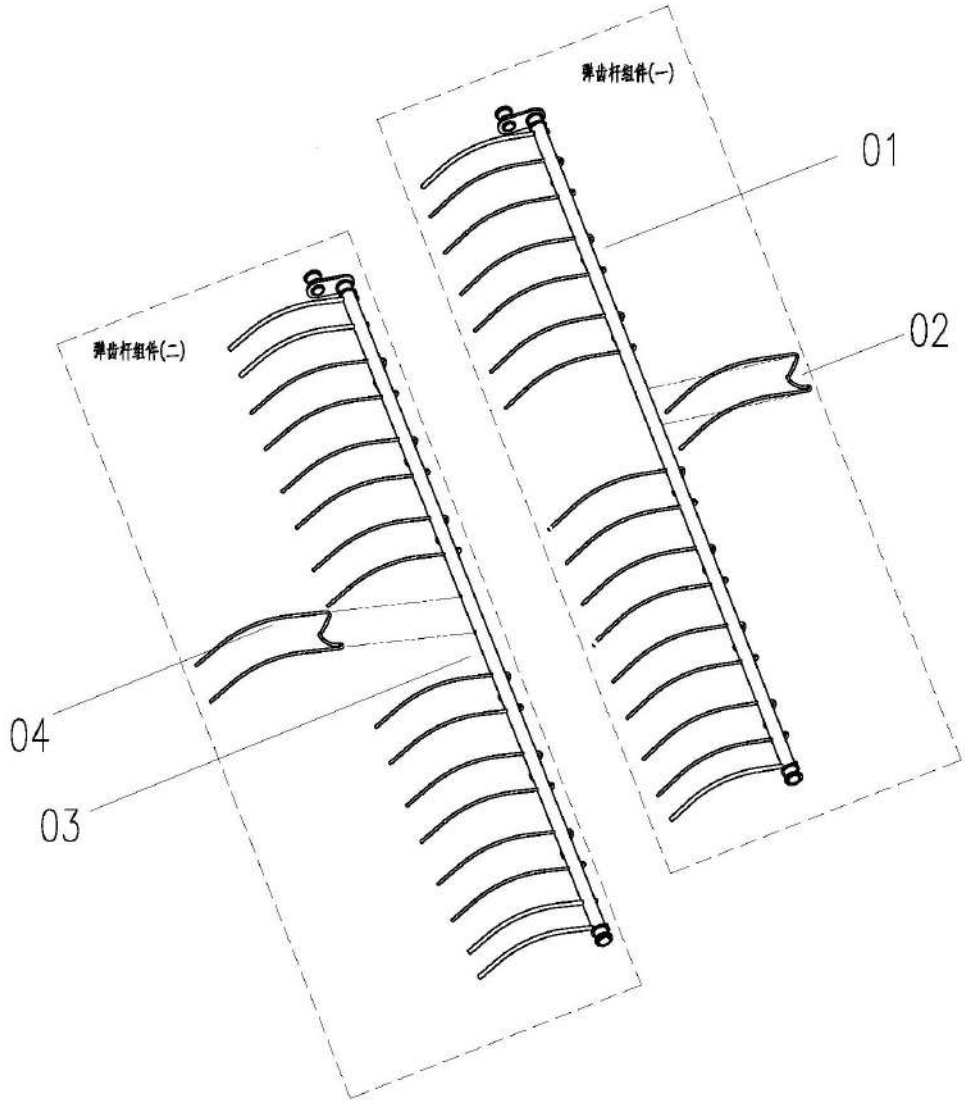

No.	Description	Qty	Part Code	Remark
1	Reel Bar weld (1)	1	W2.5E-01XC-01-05-06-01-00	
2	Spring Tooth	8	WD.1E.2.2-01	
3	Reel Bar Weld (2)	1	W2.5E-01XC-01-05-15-01-00	
4	Spring Tooth	7	WD.1E.2.2-01	

Reel Bar Assy（Rui Long 2.1m Header Optional 2）

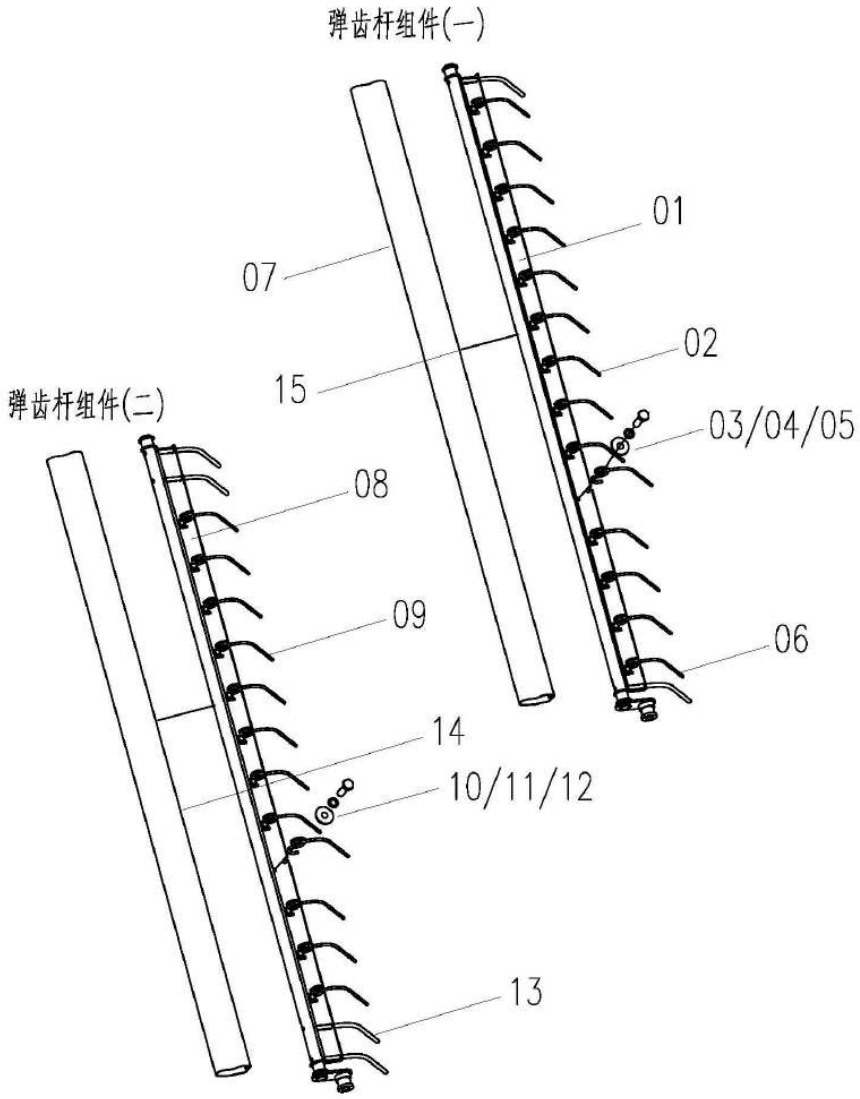

Reel Bar Assy（Rui Long 2.1m Header Optional 2）				
No.	**Description**	**Qty**	**Part Code**	**Remark**
01	Reel Bar weld (1)	1	W2.5E-01XCD-01-05-06-01-00	
02	Reel Spring Teeth (Left-Handed)	14	W2.5E-01M-01-05-06-02	
03	Bolt M8×20	16	GB/T5783-86	
04	Washer 8	16	GB/T96-85	
05	Cushion 8	16	GB/T93-87	
06	Reel Spring Teeth (right-handed)	2	W2.5E-01M-01-05-06-03	
07	Anti-Straw Housing (Ⅰ)	1	W2.5E-01XCD-01-05-06-04	
08	Reel Bar Weld (Ⅱ)	1	W2.5E-01XCD-01-05-15-01-00	
09	Reel Spring Teeth (left-handed)	14	W2.5E-01M-01-05-06-02	
10	Bolt M8×20	17	GB/T5783-86	
11	Gasket 8	17	GB/T96-85	
12	Cushion 8	17	GB/T93-87	
13	Reel Spring Teeth (right-handed)	3	W2.5E-01M-01-05-06-03	
14	Anti-Straw Housing (Ⅱ)	1	W2.5E-01XCD-01-05-15-04	
15	Tie (black nylon)	6		

Header Auger Assy W2.5E-01XC-01A-02-00

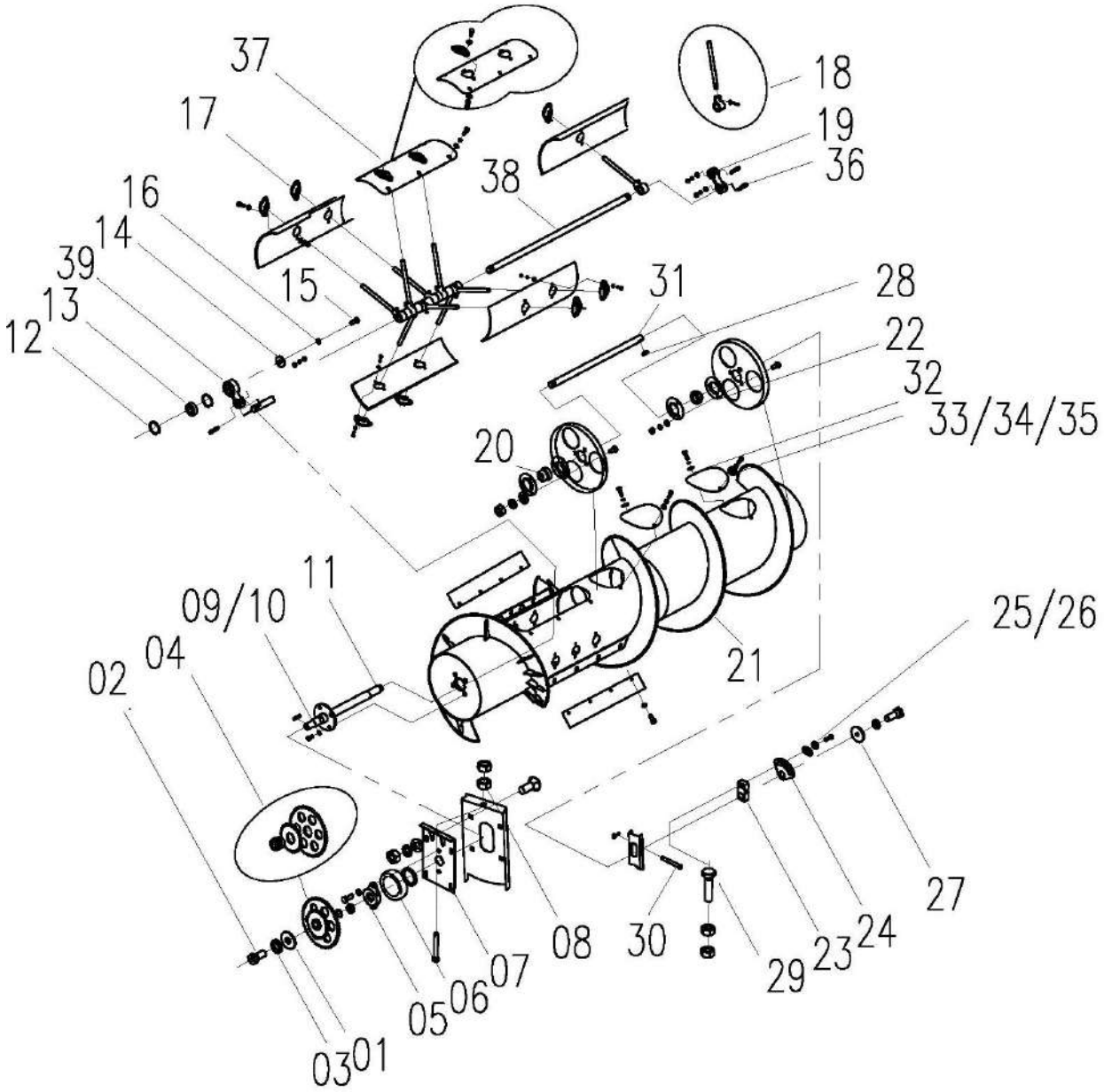

Header Auger Assy W2.5E-01XC-01A-02-00				
No.	**Description**	**Qty**	**Part Code**	**Remark**
01	Retaining Ring (2)	1	4L2.2-1.5-24	
02	Bolt M12×25	1	GB/T5783	
03	Washer 12	1	GB/T93	
04	Chain Wheel Weld	1	W2.5E-01B-01-02D-03-00	
05	Bearing Seat, Header Auger	1	W2.0-01-01-02-14	
06	Bearing 6206-2RS	1	W2.5E-01B-01-02A-16	
07	Seat Weld, Adjusting	1	W2.5E-01M-01-02-16-00	
08	Nut M10	8	GB/T6170	
09	Bolt M10×25	6	GB/T5783	
10	Washer 10	12	GB/T93	
11	Active Shaft Weld	1	W2.0-01-01-02-03-00	
12	Circlip for Hole, 52	2	GB/T893.1	
13	Bearing 6205-2RS	1	GB/T276	
14	Retaining Ring for Shaft	1	W2.0-02-11-08	
15	Bolt M8×20	2	GB/T5783	
16	Washer 8	19	GB/T93	
17	Guide Sleeve	10	W2.0-01-01-02A-11	
18	Telescopic Tooth Assy	13	W2.0-01-01-02A-07-00	
19	Radius Bar	1	W.1.4-06	
20	Bearing 90205	2	GB/T3882	
21	Header Auger Weld	1	W2.5E-01XC-01A-02-01-00	
22	Bearing Seat CY205	4	GB/T7809	
23	Slider, Header Auger	1	WD.1.4-06	
24	Adjustable Slider	1	CL1A.4-07	
25	Press plate (1)	1	4L2.2-1.5-23	
26	Bolt M10×35	2	GB/T5783	
27	Retaining Ring	1	QT004-2009	
28	Key C8×28	1	GB/T1096	
29	Bolt M10×40	1	GB/T5783	
30	Pin	1	4L2.2-1.5-1	
31	Eccentric Adjusting Shaft	1	W2.5E-01XC-01-02-13	
32	Cover, Observe Hole	4	4LZ2.1.5-10	
33	Bolt M6×18	32	GB/T5783	
34	Washer 6	32	GB/T93	
35	Washer 6	29	GB/T97.1	
36	Pin Shaft	3	4LZ2.1.5-11	
37	Cover Assy, Observe Hole, Long	1	W2.5E-01B-01-02B-02-00	

Header Auger Assy W2.5E-01XC-01A-02-00

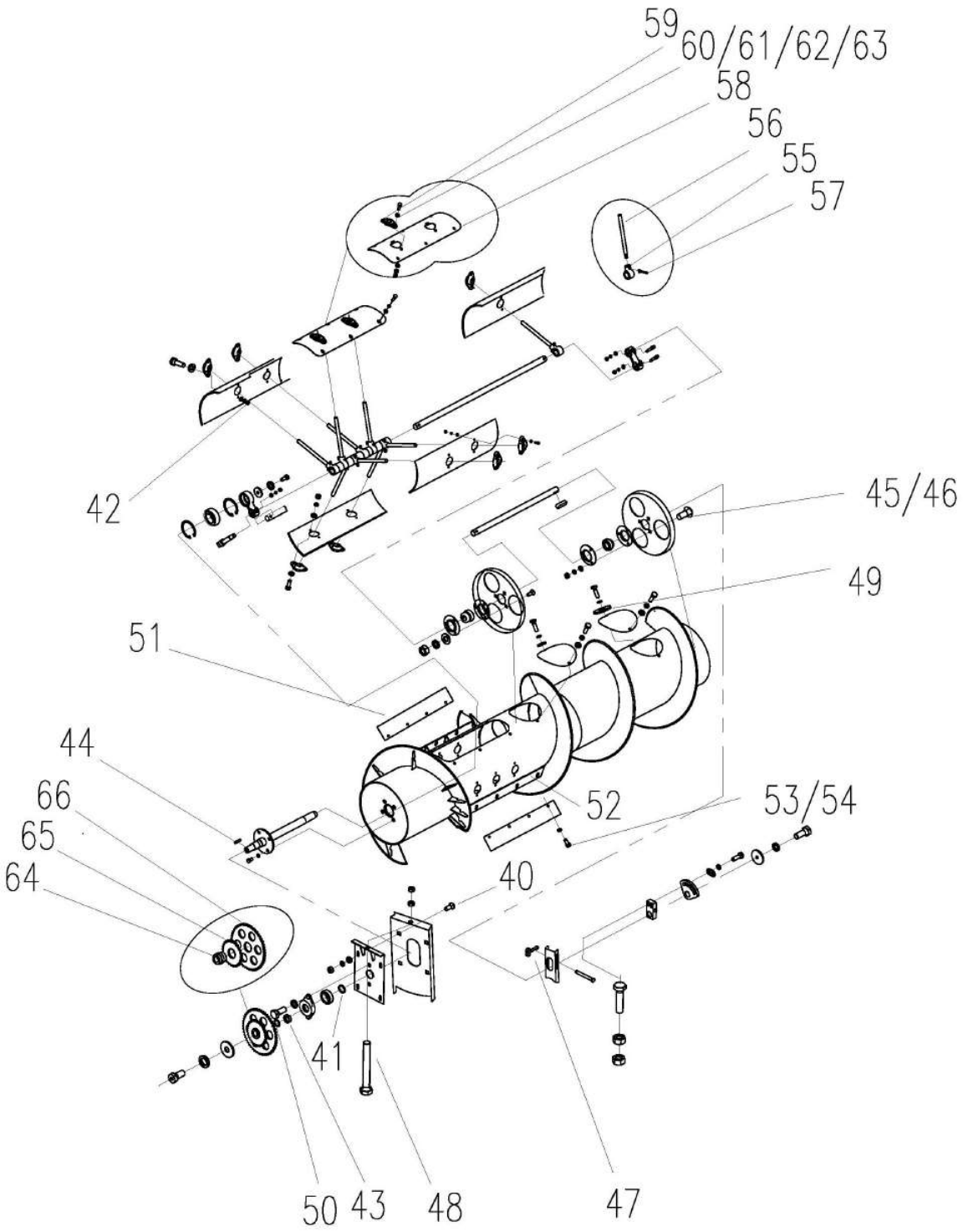

Header Auger Assy W2.5E-01XC-01A-02-00				
No.	**Description**	**Qty**	**Part Code**	**Remark**
38	Shaft, Telescopic Teeth	1	W2.5Y-01M-01-02-05	
39	Radius Bar A	1	W2.0-01-01-02-04	
40	Bolt M10×25	4	GB/T12	
41	Plate	1	W2.0-01-01-02-15	
42	Nut M6	20	GB/T6170	
43	Sleeve	1	W2.0-01-01-02-12	
44	Key C8×36	1	GB/T1096	
45	Bolt M8×20	6	GB/T12	
46	Nut M8	21	GB/T6170	
47	Pin 3.2×20	1	GB/T91	
48	Bolt M10×65	1	GB/T5783	
49	Washer 6	4	GB/T96	
50	Adjustment Gasket	On demand	W2.0-01-01-04G-10	
51	Toss Board	2	W2.5E-01B-01-02C-19	
52	Press Plate	2	W2.5E-01B-01-02C-21	
53	Bolt M8×25	10	GB/T5783	
54	Gasket 8	12	GB/T96	
55	Seat, Telescopic Teeth	1	W2.0-01-01-02-07-01	
56	Rod, Telescopic Teeth	1	W2.0-01-01-02A-07-02	
57	Pin 5×40	1	GB/T1220-84	
58	Cover, Observe Hole, Long	1	W2.5Y-01M-01-02-02-01	
59	Guide Sleeve, Telescopic Teeth	3	W2.0-01-01-02A-11	
60	Bolt M6×18	6	GB/T5781-86	
61	Washer 6	6	GB/T97.1-85	
62	Nut M6	6	GB/T6170-86	
63	Washer 6	6	GB/T93-87	
64	Hub	1	W2.5E-01B-01-02D-03-01	
65	Chain Wheel B	1	W2.5E-01B-01-02D-03-03	
66	Chain Wheel	1	W2.5E-01B-01-02D-03-02	52 Teeth

Cutter Assy W2.5E-01XC-01-03-00

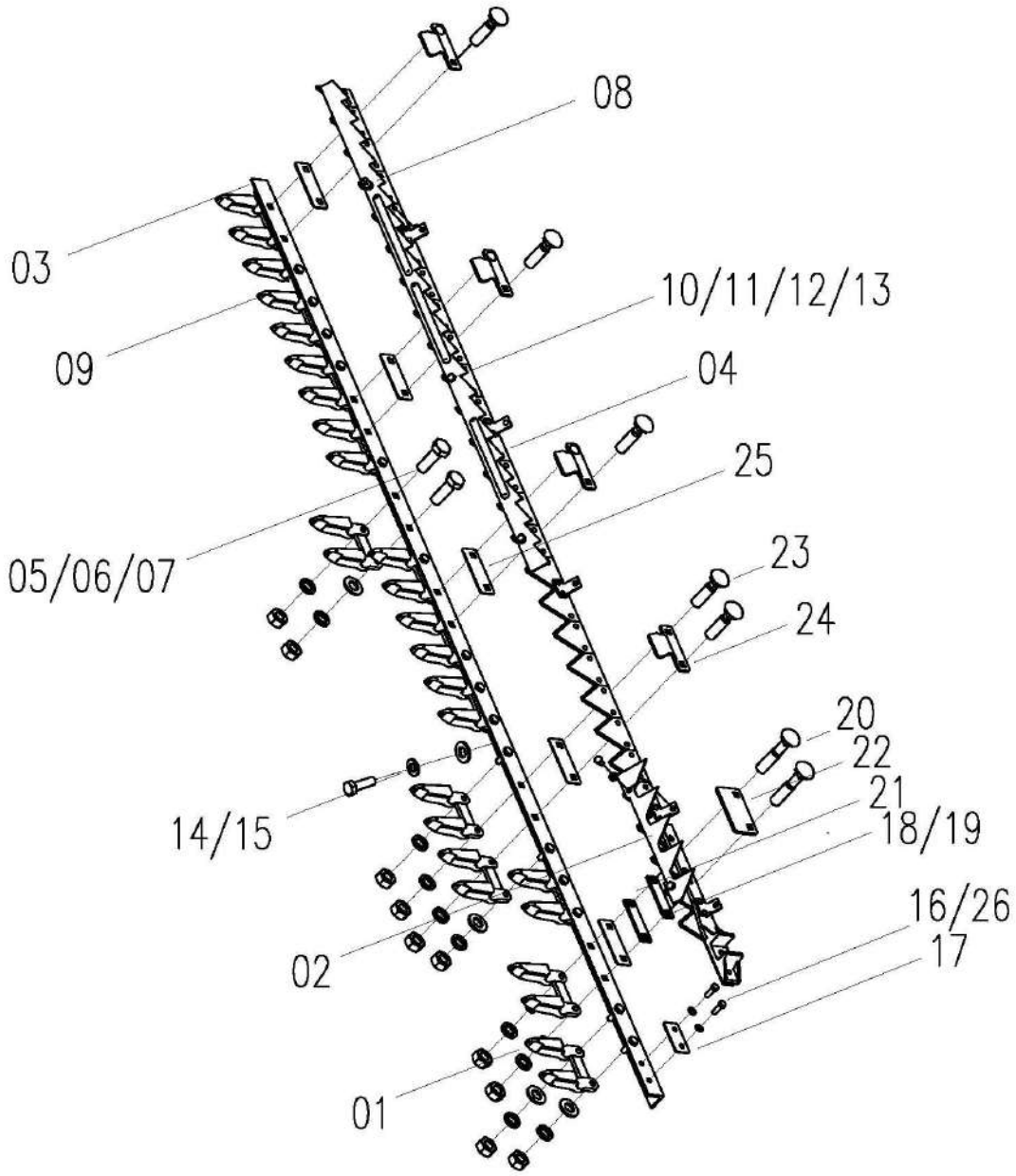

Cutter Assy W2.5E-01XC-01-03-00				
No.	**Description**	**Qty**	**Part Code**	**Remark**
01	Blade Guide A	1	W2.0-01-01-03G-01	
02	Conveyor Teeth, Left	1	W2.0-01-01-03G-18	
03	Bar, Blade Fixed	1	W2.5E-01XC-01-03-02	
04	Cutter Bar Assy, Blade Fixed	1	W2.5E-01XC-01-03-03-00	
05	Bolt M10×25	8	GB/T5783-86	
06	Washer 10	36	GB/T93-87	
07	Nut M10	29	GB/T6170-86	
08	Conveyor Teeth, Right	1	W2.5E-01XC-01-03-01	
09	Blade Guide B	12	W2.0-01-01-03G-04	
10	Bolt M8×18	6	GB/T5783-86	
11	Washer 8	10	GB/T97.1-85	
12	Washer 8	8	GB/T93-87	
13	Nut M8	8	GB/T6170-86	
14	Bolt M8×20	2	GB/T5783-86	
15	Friction Plate	1	W2.0-01-01-03G-06	
16	Plate	2	W2.0-01-01-03-05	
17	Plate, Adjusting	On demand	W2.0-01-01-03G-07	
18	Bolt M10×50	2	GB/T12-88	
19	Friction Plate	6	W2.0-01-01-03G-08	
20	Press Plate	1	W2.0-01-01-03G-09	
21	Bolt M10×35	10	GB/T12-88	
22	Plate, Blade Pressed	5	W2.0-01-01-03G-10	
23	Bolt M10×30	17	GB/T12-88	
24	Washer 10	8	GB/T96-85	
25	Blade Guide C	1	W2.0-01-01-03G-05	
26	Plate, Adjusting	On demand	W2.0-01-01-03G-11	

Reel Transmission Assy W2.5E-01XCT-01-04C-00

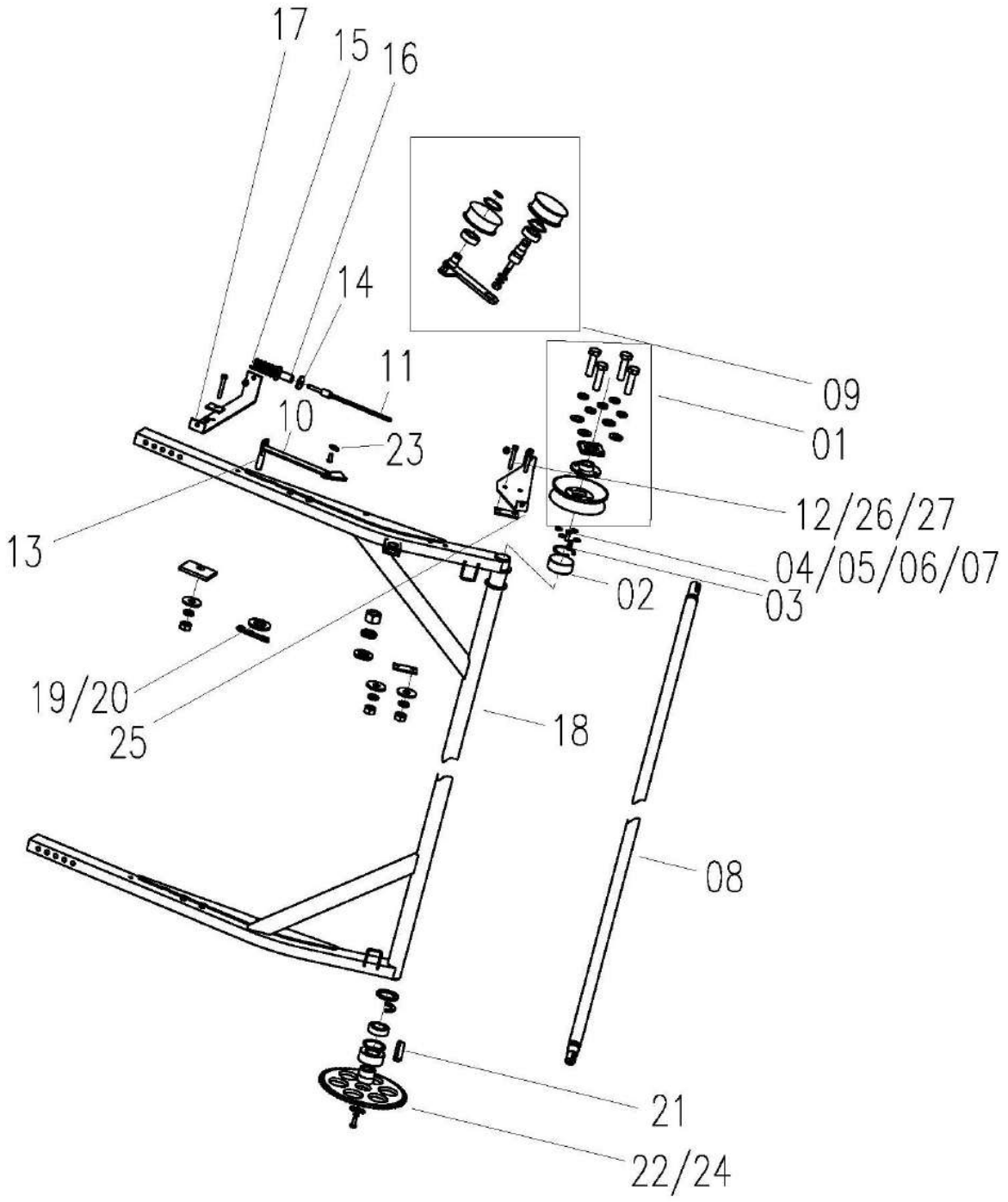

Reel Transmission Assy W2.5E-01XCT-01-04C-00				
No.	**Description**	**Qty**	**Part Code**	**Remark**
01	Reel Pulley Assy, Speed Changing	1	W2.5E-01XCP-01-04A-01-00	
02	Bearing 6205-2RS	2	GB/T276-94	
03	Key C8×25	1	GB/T1096-79	
04	Bolt M8×20	2	GB/T5783-86	
05	Washer 8	5	GB/T93-87	
06	Retaining Ring for Shaft	2	W2.0-02-11-08	
07	Circlip for Hole, 52	2	GB/T893.1-86	
08	Shaft Weld, Frame	1	W2.5E-01XC-01-04-04-00	
09	Tension Arm Assy	1	W2.5E-01XCP-01-04-08-00	
10	Connecting Plate Weld	1	W3.5-01AC-01-04-10-00	
11	Screw Rod Weld	1	W3.5-01AC-01-04-11-00	
12	Nut M8	5	GB/T6170	
13	Rotary Axis	1	W3.5-01AC-01-04-03A	
14	Retaining Ring	1	W3.5-01AC-01-04-12	
15	Spring	1	W3.5-01AC-01-04-09	
16	Sleeve	1	W3.5-01AC-01-04-13	
17	Fixed Seat Weld, Front	1	W2.5E-01B-01-04A-03-00	
18	Frame Assy, Support	1	W2.5E-01XCT-01-04C-02-00	
19	Washer 14	1	GB/T97.1-85	
20	Pin	2	XSS46-06	
21	Key C8×32	1	GB/T1096-79	
22	Chain Wheel Weld	1	W2.5E-01B-01-04-11-00	
23	Washer 8	4	GB/T97.1	
24	Adjustment Gasket	On demand	W2.0-01-01-04G-10	
25	Fixed Seat Weld, Rear	1	W2.5E-01XCT-01-04C-04-00	
26	Bolt M8X55	3	GB/T5782-86	
27	Washer 8	3	GB/T96-85	

Reel Transmission Assy W2.5E-01XCP-01-04-00

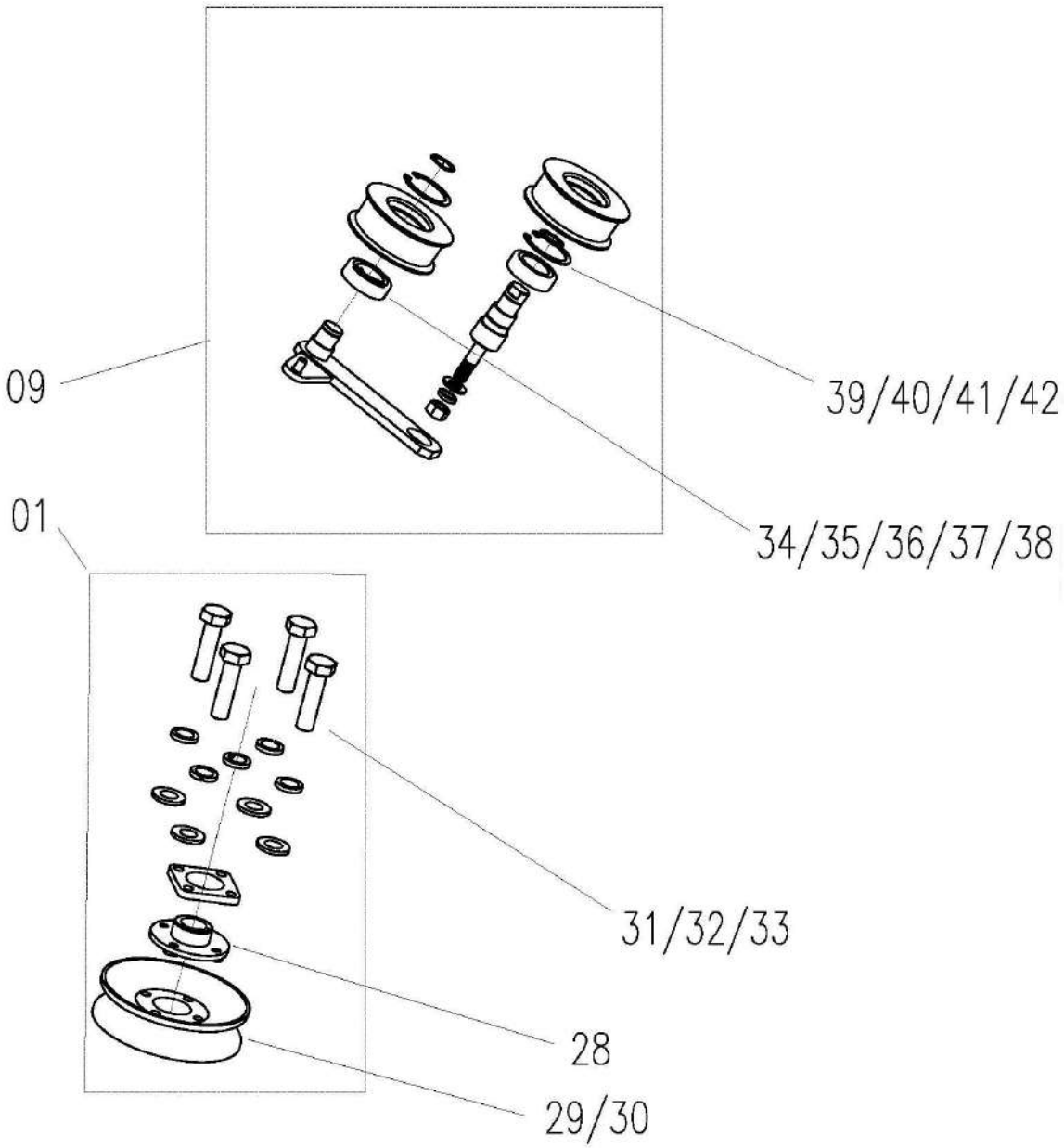

Reel Transmission Assy W2.5E-01XCT-01-04C-00				
No.	**Description**	**Qty**	**Part Code**	**Remark**
28	Wheel	1	W2.5E-01XCP-01-04-01-01	
29	Belt Pulley	2	W2.5E-01XCP-01-04-01-02	
30	Plate	4	W2.5E-01XCP-01-04A-01-03	
31	Bolt M8X30	4	GB/T5783-86	
32	Washer 8	4	GB/T93-87	
33	Washer 8	8	GB/T97.1-85	
34	Tension wheel	2	W2.5E-01XCP-01-04-08-01	
35	Bearing 6204-2RS	2	GB/T276-94	
36	Tension Arm Weld	1	W3.5-01AC-01-04-08-01-00	
37	Retaining Ring for Shaft 20	2	GB/T894.1	
38	Retaining Ring for Hole 47	2	GB/T893.1-86	
39	Rotary Axis	1	W2.5E-01B-01-04-08A-02	
40	Washer 12	1	GB/T93-87	
41	Nut M12	1	GB/T6170-86	
42	Washer 12	1	GB/T97.1-85	

Blade Driving Assy W2.5E-01B -01-07-00

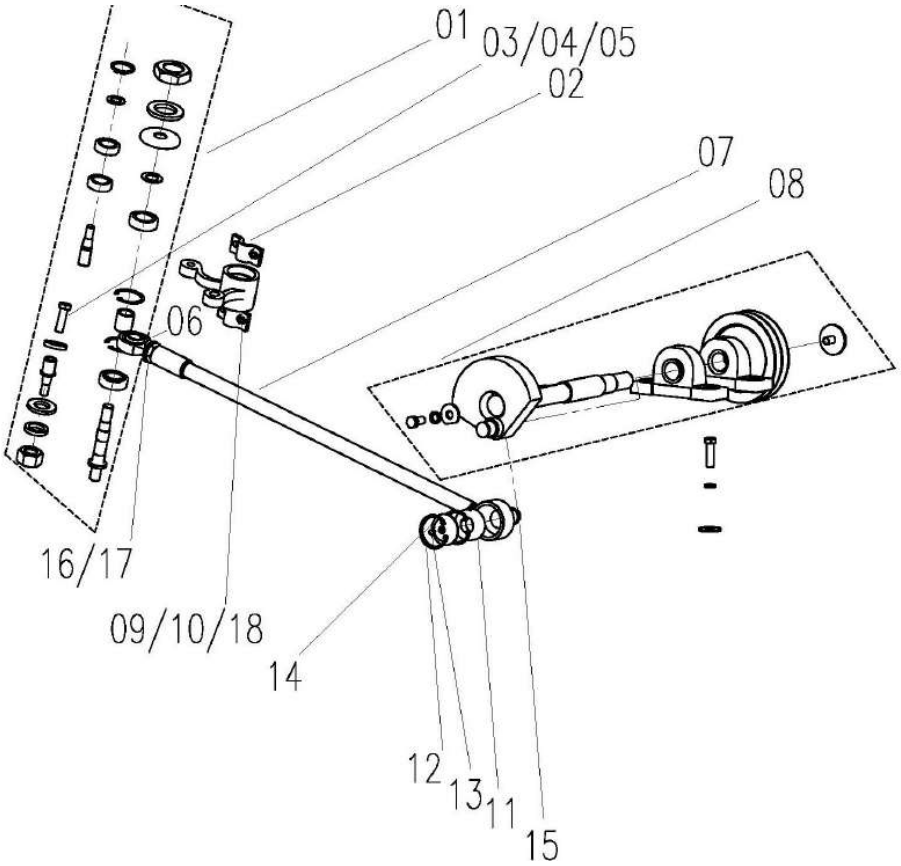

No.	Description	Qty	Part Code	Remark
01	Upper Cutter Swing Lever Assy	1	W2.0-01-01-07-01-00	
02	Press Plate	2	W2.0-01-01-07-03	
03	Bolt M12 × 25	1	GB/T5783-86	
04	Washer 12	1	GB/T93-87	
05	Press plate (II)	1	W2.0-01-01-07-04	
06	Bearing	1	W2.0-01-01-07-05-00	
07	Upper Connecting Rod Weld	1	W2.0-01-01-07-06-00	
08	Pendulum Cross Bridge Assy	1	W2.5E-01B-01-07-02-00	
09	Bolt M10 × 30	4	GB/T5783-86	
10	Washer 10	4	GB/T93-87	
11	Self-aligning Bearing 1205	1	W2.0-01-01-07-12	
12	Retaining Ring for Holes 52	2	GB/T893.1-86	
13	Oil Cup M6	1	GB/T1152-89	
14	Dust Cover	1	W2.0-01-01-07-07	
15	Circlip for Shaft 25	1	GB/T894.1	
16	Sleeve	1	W.1.5B-08	
17	Steel Hose Clamp	1	25-40	
18	Adjustment Plate	On demand	W2.0-01-01-07-08	

Upper Cutter Swing Lever Assy W2.0-01-01-07-01-00

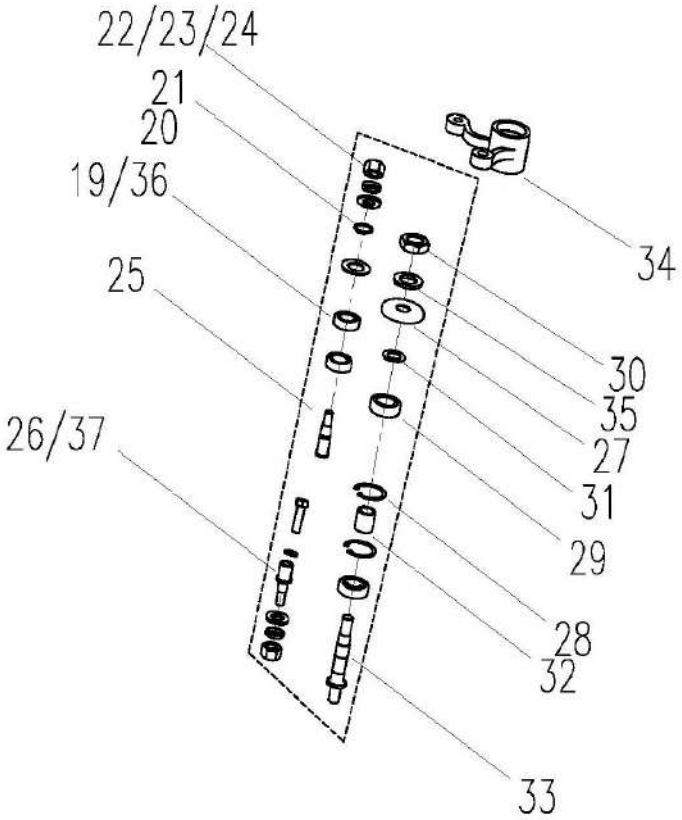

No.	Description	Qty	Part Code	Remark
19	Bearing 6203-2RS	2	W2.0-01-01-07-01-10	
20	Fender Cover	1	W2.0-01-01-07-01-08	
21	Circlip for Shaft 17	1	GB/T894.1	
22	Washer 12	2	GB/T93-87	
23	Washer 12	2	GB/T97.1-85	
24	Nut 12	2	GB/T6170-86	
25	Pin Shaft	1	W2.0-01-01-07-01-09	
26	Mandrel	1	W2.0-01-01-07-01-03	
27	Dust Cover	1	W2.0-01-01-07-01-04	
28	Retaining Ring for Hole 47	2	GB/T893.1-86	
29	Bearing 6204-RS	2	GB/T276-94	
30	Nut M18X1.5	1	GB6173-86	
31	Middle Spacer	1	W2.0-01-01-07-01-05	
32	Spacer	1	W2.0-01-01-07-01-06	
33	Pendulum Shaft	1	W2.0-01-01-07-01-01	
34	Upper Cutter Swing Lever	1	W2.0-01-01-07-01-02	
35	Sleeve	1	W2.0-01-01-07-01-07	
36	Bearing SA6203-2RSL	2	W2.0-01-01-07-01-11	
37	Mandrel	1	W2.0-01-01-07-01-03A	

Pendulum Cross Bridge Assy W2.5E-01B-01-07-02-00

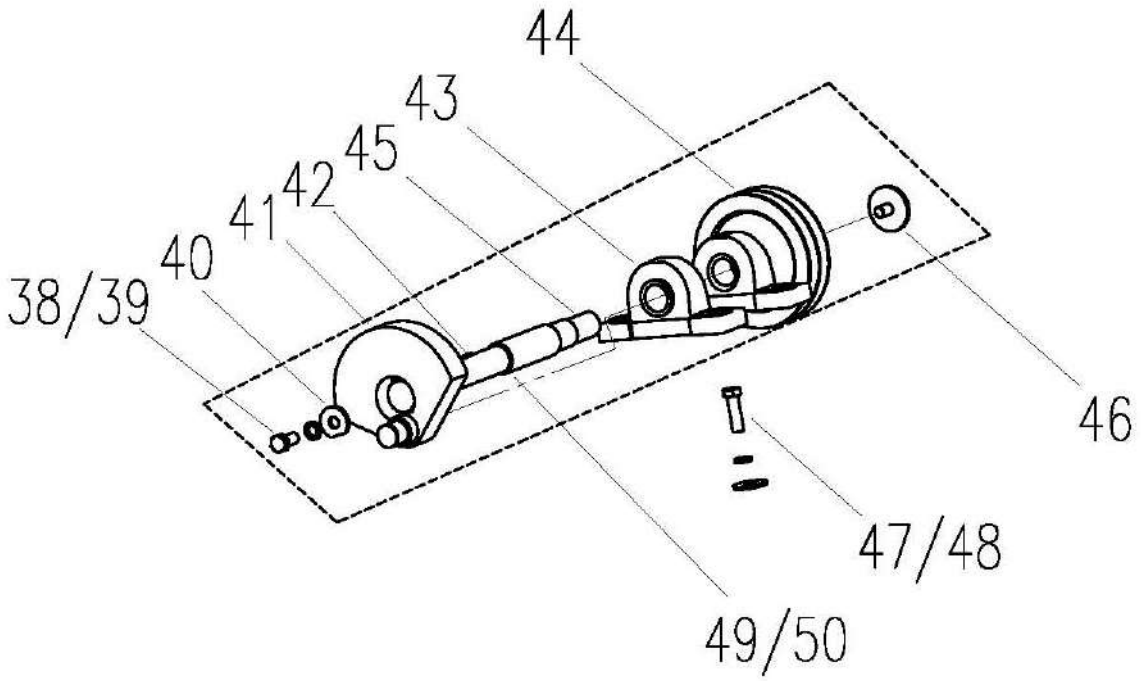

No.	Description	Qty	Part Code	Remark
38	Bolt M12 × 25	2	GB/T5783-86	
39	Washer 12	1	GB/T93-87	
40	Notch Plate	1	W2.0-01-01-07-02-01	
41	Eccentric Crank Weld	2	W2.5E-01B-01-07-02-02A-00	
42	Key A8 × 45	2	GB/T1096-79	
43	Bearing UCP206	2	W2.0-01-01-07-02-08	
44	Conveyor Passive Pulley	1	W2.5E-01B-01-07-02-03A	
45	C8 × 40	1	GB/T1096-79	
46	Press Plate	1	W2.0-01-01-07-02-04	
47	Bolt M12 × 40	2	GB/T5783-86	
48	Washer 12	2	GB/T96	
49	Pendulum Shaft	1	W2.5E-01B-01-07-02-05A	
50	Pipe	1	W2.5E-01M-01-07-02-01	

Chain Tension Wheel Assy W2.5E-01B-01-11-00

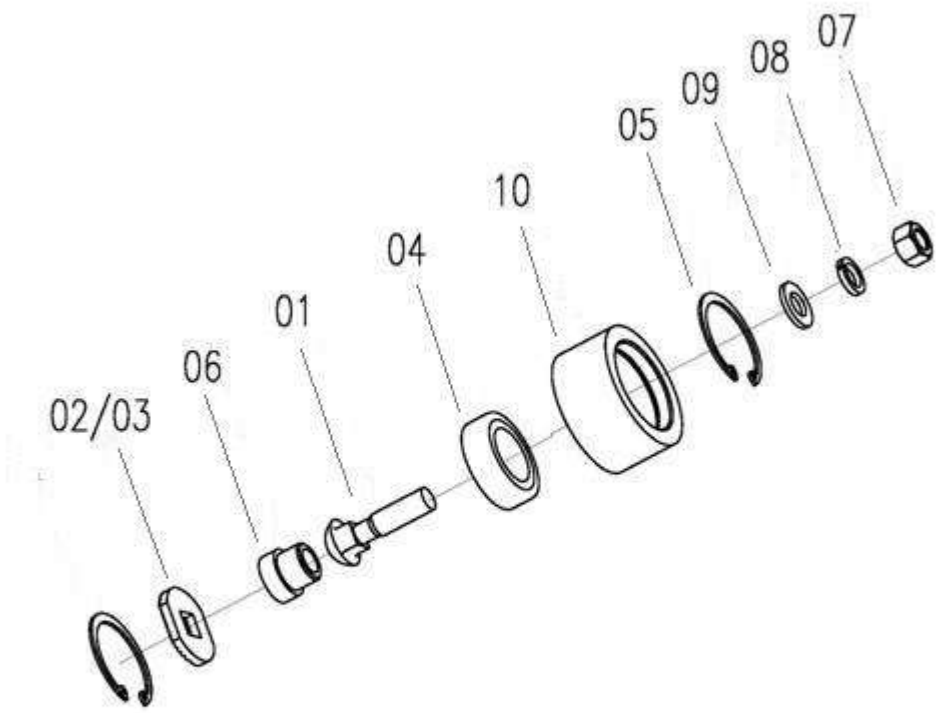

No.	Description	Qty	Part Code	Remark
1	Bolt M12 × 50	1	GB/T12-88	
2	Plate	1	W2.5E-01B-01-11-03	
3	Adjustment Gasket	On demand	W2.0-01-01-11-03	
4	Bearing 6204-2RS	1	GB/T276-94	
5	Retaining Ring for Hole 47	2	GB/T893.1-86	
6	Spacer	1	W2.5E-01B-01-11-02	
7	Nut M12	1	GB/T6170-86	
8	Washer 12	1	GB/T93-87	
9	Washer 12	1	GB/T97.1-85	
10	Nylon Tension Wheel	1	WD.1F.33-02	

Header Tension Wheel Assy W2.5E-01B-01-15-00

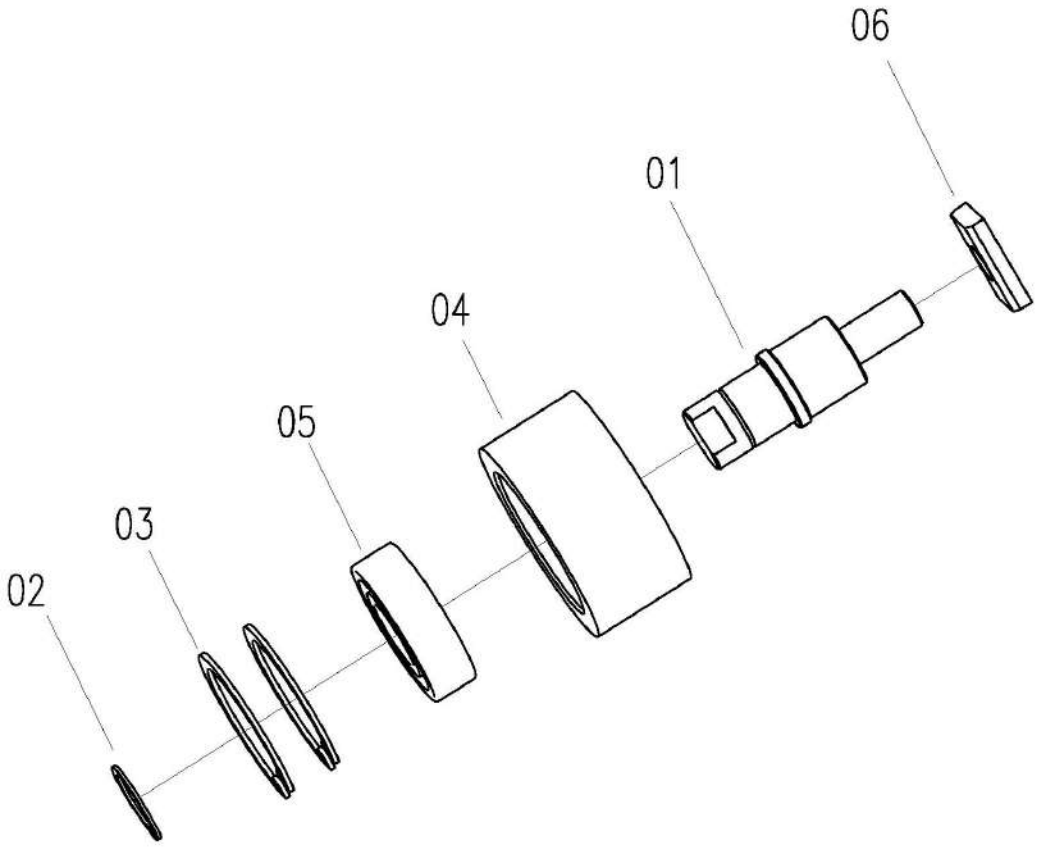

No.	Description	Qty	Part Code	Remark
1	Tension Wheel	1	W2.0-01-01-10-01	
2	Retaining Ring for Shaft 20	1	GB/T894.1	
3	Retaining Ring for Hole 47	2	GB/T893.1-86	
4	Nylon Tension Wheel	1	WD.1F.33-02	
5	Bearing 6204-2RS	1	GB/T276-94	
6	Nut	1	W2.0-01-01-10-02	

Eccentric Roller Combination And Reel Pulley Combination

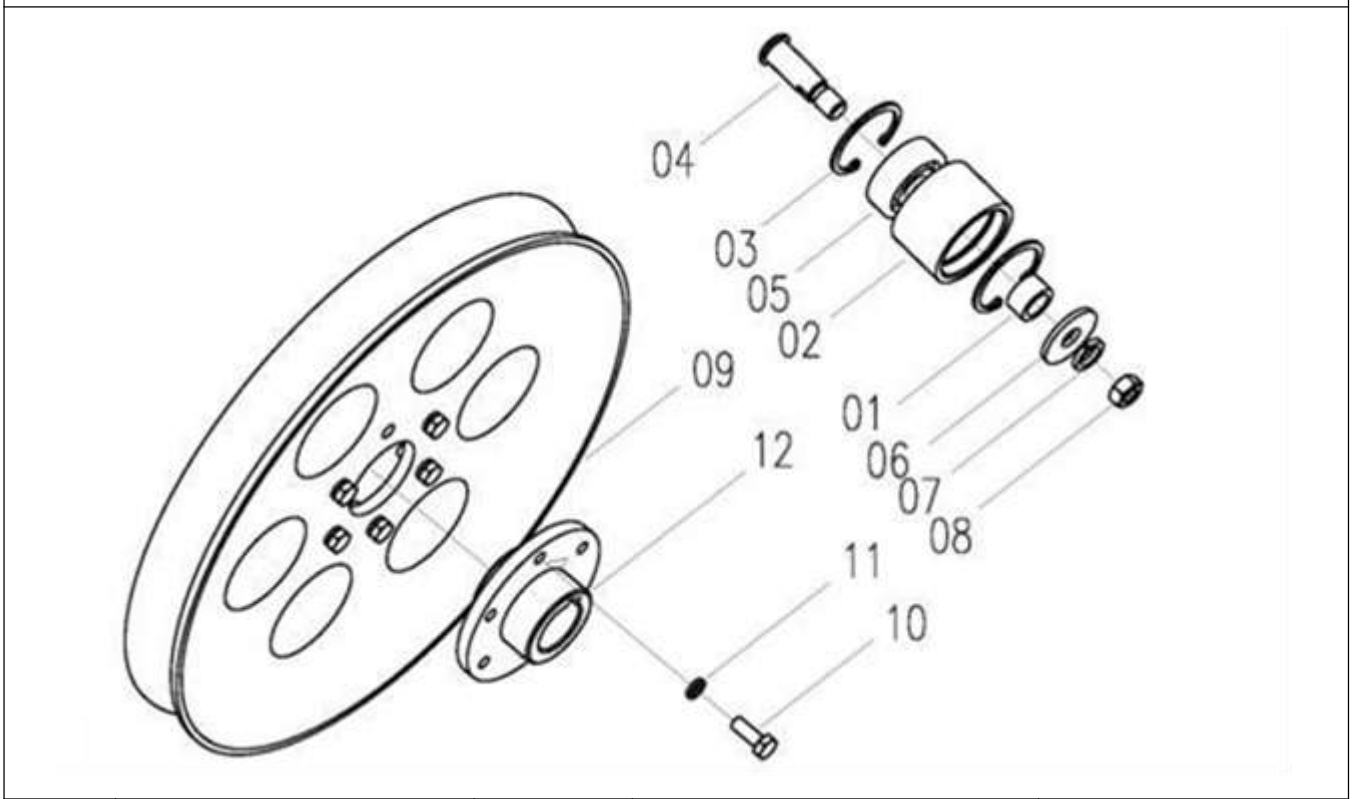

No.	Description	Qty	Part Code	Remark
1	Spacer	1	WD.1E.2-03	
2	Roller	1	W2.0B-01B-01-05Q-12-01	
3	Retaining Ring for Hole 37	2	GB893.1-86	
4	Roller shaft	1	WD.1E.2-02	
5	Bearing 6301-2RS	1	GB/T276-94	
6	Washer 10	1	GB/T96-85	
7	Washer 10	1	GB/T93-87	
8	Nut M10	1	GB/T6170-86	
9	Pulley Wheel	1	W2.5E-01XCP-01-05-03-01	
10	Bolt M6X16	6	GB/T5783	
11	Washer 6	6	GB/T93	
12	Rim	1	W2.0-01-01-04-03-01	

Left Divider Assy W2.5E-01XCT-01-08A-00

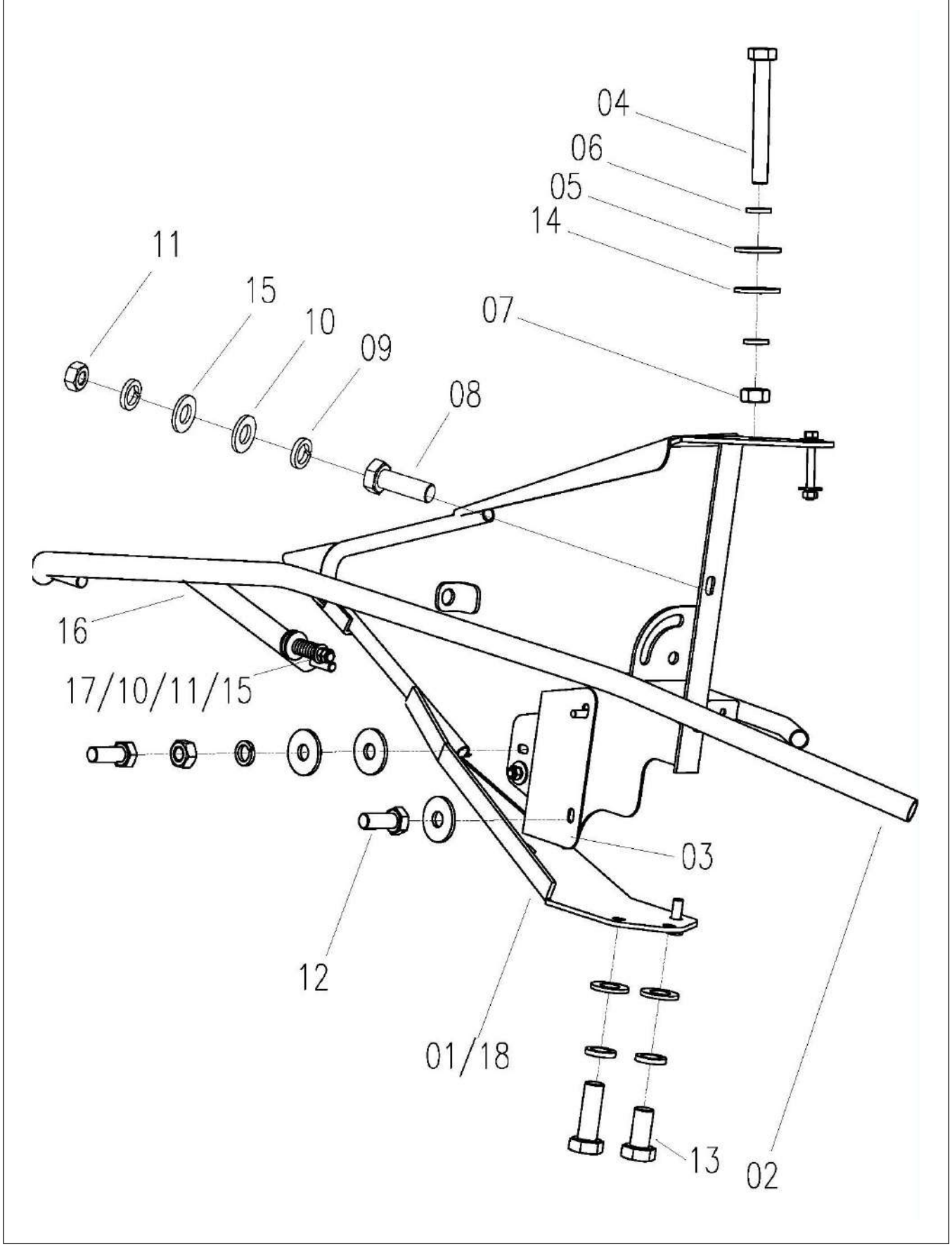

Left Divider Assy W2.5E-01XCT-01-08A-00				
No.	**Description**	**Qty**	**Part Code**	**Remark**
01	Left Divider Weld	1	W2.5E-01XCT-01-08A-01-00	
02	Movable Branch Tube Assy	1	W2.5E-01W-01-08A-03-00	
03	Baffle Plate	1	W2.5E-01B-01-08-02	
04	Bolt M8X65	2	GB/T5782	
05	Washer 8	8	GB/T96	
06	Washer 8	15	GB/T93	
07	Nut M8	7	GB/T6170	
08	Bolt M10X30	3	GB/T5783	
09	Washer 10	8	GB/T93	
10	Washer 10	8	GB/T97.1	
11	Nut M10	5	GB/T6170	
12	Bolt M8X20	2	GB/T5783	
13	Bolt M10X20	3	GB/T5783	
14	Washer 8	7	GB/T97.1	
15	Washer 10	5	GB/T96	
16	Movable Branch Tube	1	W2.5E-01W-01-08A-03-01-00	
17	Spring	1	L20.1.2-01	
18	Left Divider Weld	1	W2.5E-01XCT-01-08AB-01-00	Myanmar

Right Divider Assy W2.5E-01XCT-01-06A-00

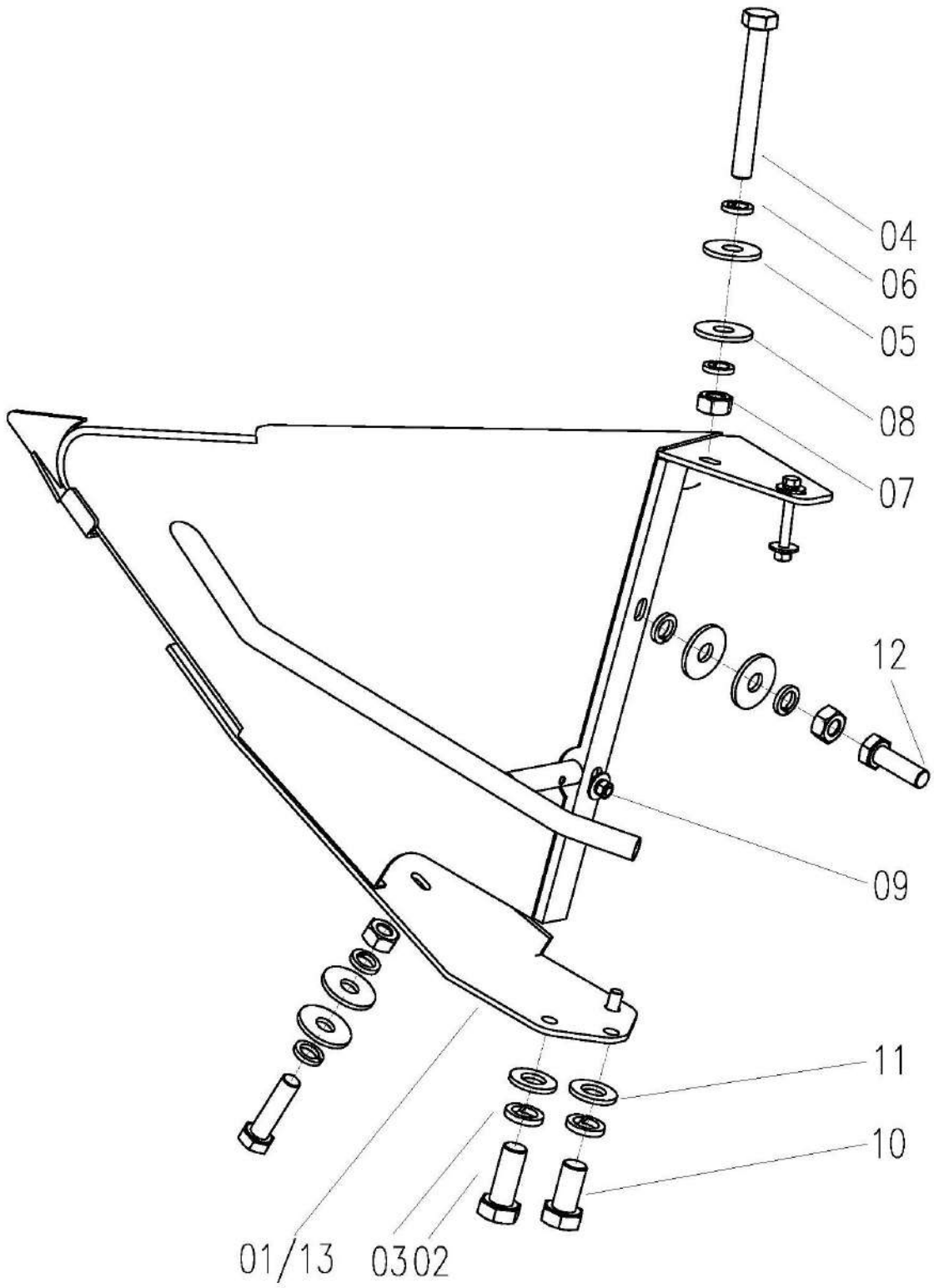

Right Divider Assy W2.5E-01XCT-01-06A-00				
No.	**Description**	**Qty**	**Part Code**	**Remark**
01	Right Divider Weld	1	W2.5E-01XCT-01-06A-01-00	
02	Bolt M10X20	2	GB/T5783	
03	Washer 10	3	GB/T93	
04	Bolt M8X65	2	GB/T5782	
05	Washer 8	8	GB/T96	
06	Washer 8	9	GB/T93	
07	Nut M8	5	GB/T6170	
08	Washer 8	2	GB/T97.1	
09	Bolt M8X25	2	GB/T5783	
10	Bolt M10X20	3	GB/T5783	
11	Washer10	3	GB/T97.1	
12	Bolt M8X30	1	GB/T5783	
13	Right Divider Weld	1	W2.5E-01XCT-01-06AB-01-00	Myanmar

Conveyor Assy W2.5E-01XCT-02-00

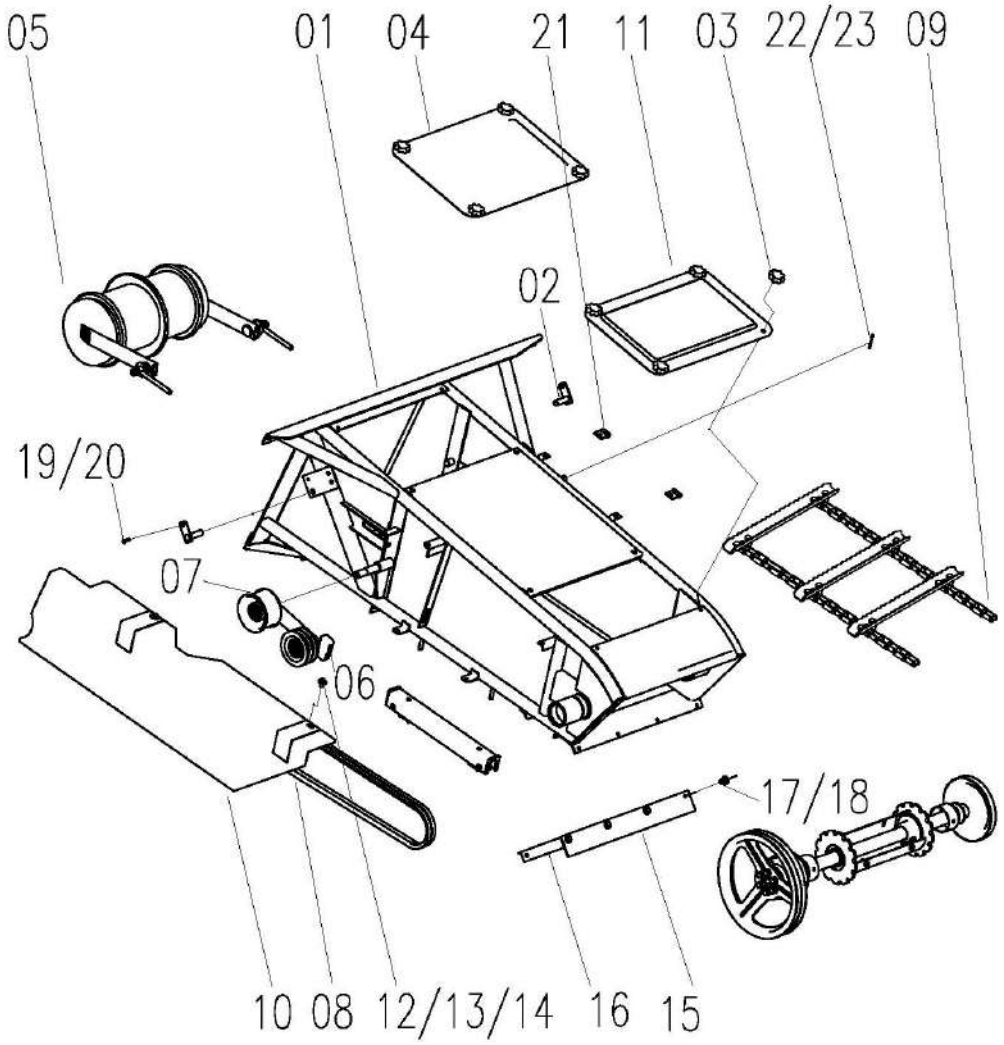

Conveyor Assy W2.5E-01XCT-02-00				
No.	**Description**	**Qty**	**Part Code**	**Remark**
01	Conveyor Weld	1	W2.5E-01XCT-02-01-00	
02	Pin Weld, Oil Cylinder	1	W2.5E-01XC-02-15-00	
03	Bolt	8	W2.5E-01B-02-37	
04	Upper Cover	1	W2.5E-01XC-02-03	
05	Driven Wheel Assy	1	W2.5E-01B-02Y-02-00	
06	Baffle Plate	1	W2.5E-01XC-02-18	
07	Tension Pulley Assy	1	W2.5E-01M-02S-05-00	
08	Belt, Conveyor	2	W2.5E-01XC-02-11	
09	Conveyor Chain Assy	1	W2.5E-01B-02-09D-00	
10	Cover Assy	1	W2.5E-01XC-02-10-00	
11	Upper Cover B	1	W2.5E-01B-02Y-08	
12	Bolt M8×20	12	GB/T5783	
13	Washer 8	10	GB/T96	
14	Washer 8	16	GB/T93	
15	Canvas	1	W2.5E-01B-02-12B	
16	Press Plate	1	W2.5-01-02-18	
17	Bolt M8×25	4	GB/T5783	
18	Nut M8	6	GB/T6170	
19	Bolt M6×16	2	GB/T5783	
20	Washer 6	2	GB/T93	
21	Hose Clamp	4	W2.5E-01B-28	
22	Retaining Ring	1	W2.5E-01XC-02-13	
23	Pin 4×36	1	GB/T91	

Conveyor Assy W2.5E-01XCT-02-00

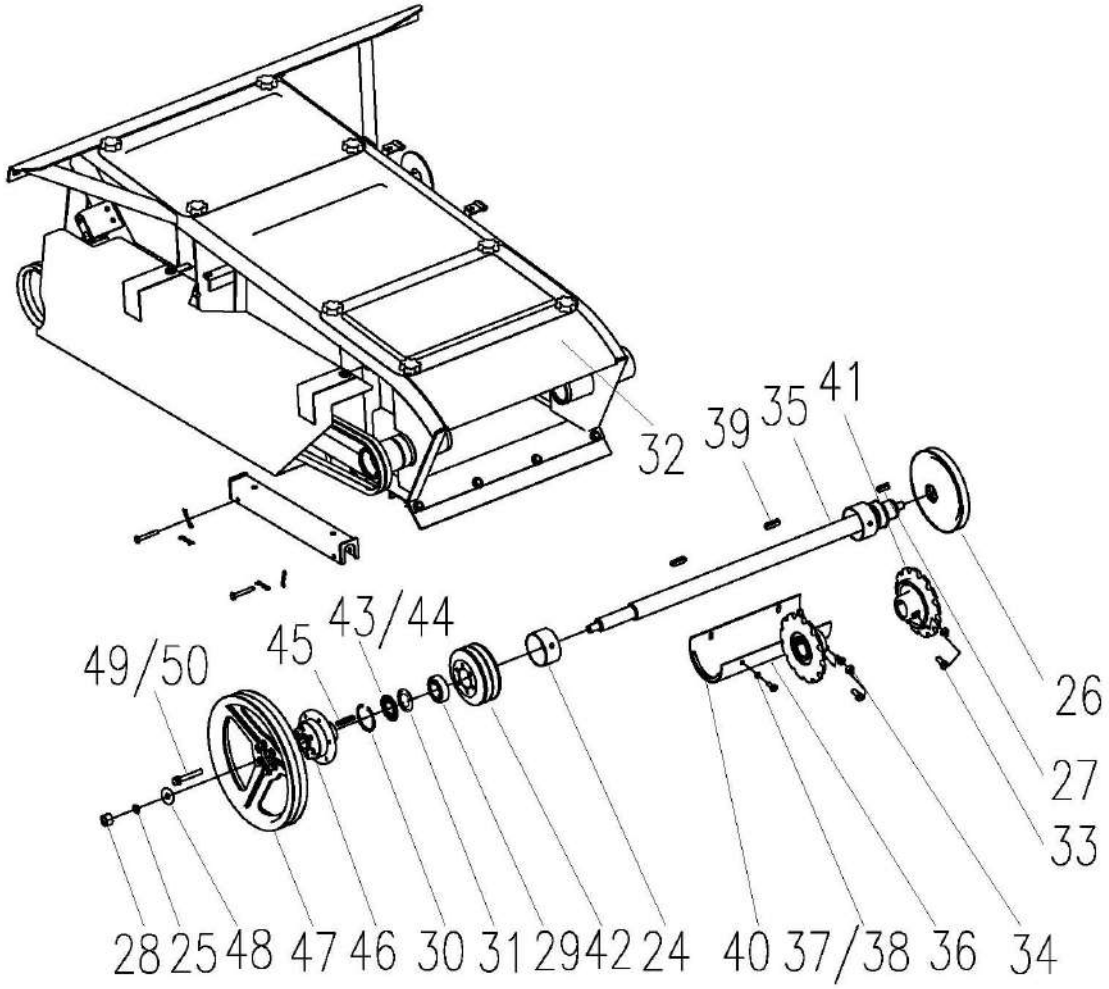

Conveyor Assy W2.5E-01XCT-02-00				
No.	**Description**	**Qty**	**Part Code**	**Remark**
24	Shaft Sleeve	2	W2.5E-01B-02-40	
25	Washer 16	2	GB/T93-87	
26	Driving Wheel, Right	1	W2.5DA-01-02-04-00	
27	Key C8×36	1	GB/T1096-79	
28	Nut M16×1.5	2	GB/T6176-86	
29	Bearing 6206-2RS	2	W2.5E-01B-02-16	
30	Retaining Ring for Hole 62	2	GB/T893.1-86	
31	Dust Proof Washer	2	W2.5-01-02-24	
32	Baffle Plate	2	W2.5E-01B-02-25	
33	Bolt, Tighten	2	W2.5-01G-02-26	
34	Nut M10×1	2	GB/T6171	
35	Upper Shaft	1	W2.5E-01B-02-05Y	
36	Sleeve Weld	2	W2.5E-01B-02-06A-00	
37	Bolt M8×20	4	GB/T818	
38	Washer 8	4	GB/T97.1-85	
39	Key A12×40	2	GB/T1096-79	
40	Sponge Strip	4	W2.5Y-01M-02-12	
41	Chain Wheel, Conveyor	2	W2.5E-01B-02-04Y	
42	Driving Wheel B, Header	1	W2.5E-01XC-02-07B	
43	Adjustment Gasket	On Demand	W2.5-02-56-07-22	
44	Plate	On Demand	W2.5-02G-02-10-01-05	
45	Key A8×50	1	GB/T1096-79	
46	Driving Hub, Left	1	W2.5E-01B-02-38X	
47	Belt Pulley, Upper Shaft	1	W2.5E-01B-02-32	
48	Retaining Ring	2	W2.5-01-02-12	
49	Bolt M10×70	6	GB/T5782-86	
50	Washer 10	6	GB/T93-87	

Conveyor Assy W2.5E-01XCT-02-00

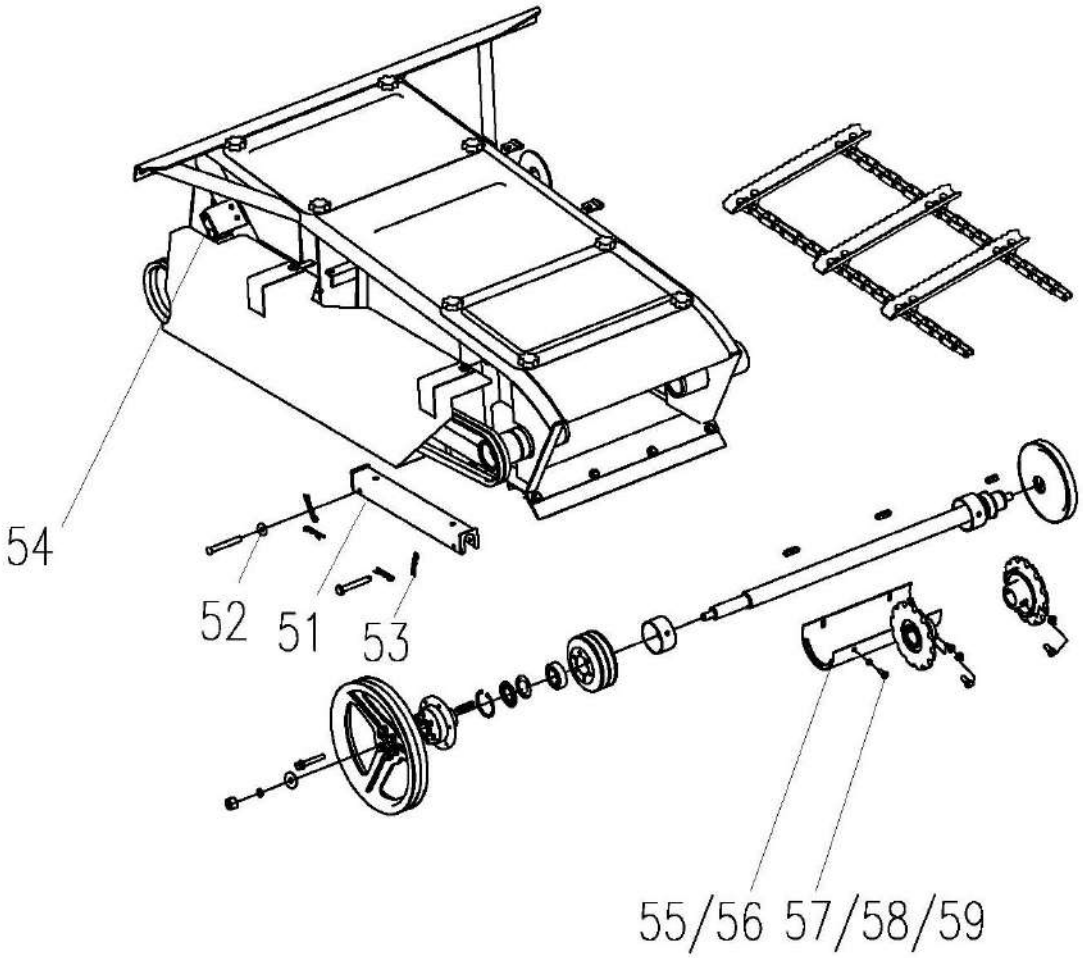

Conveyor Assy W2.5E-01XCT-02-00				
No.	**Description**	**Qty**	**Part Code**	**Remark**
51	Cylinder Lock Assy	1	W2.5E-01XC-02-12-00	
52	Washer 10	2	GB/T97.1	
53	Pin	2	XSS46-06	
54	Pin Weld, Oil Cylinder	1	W2.5E-01XC-02-16-00	
55	Sleeve Assy, Upper Shaft	1	W2.5E-01B-02-06B-00	
56	Baffle Plate	1	W2.5E-01XCT-02-50	
57	Bolt M8X25	1	GB/T5783	
58	Washer 8	1	GB/T96	
59	Washer 8	1	GB/T93	

Conveyor Tension Pulley Assy W2.5E-01M-02S-05-00

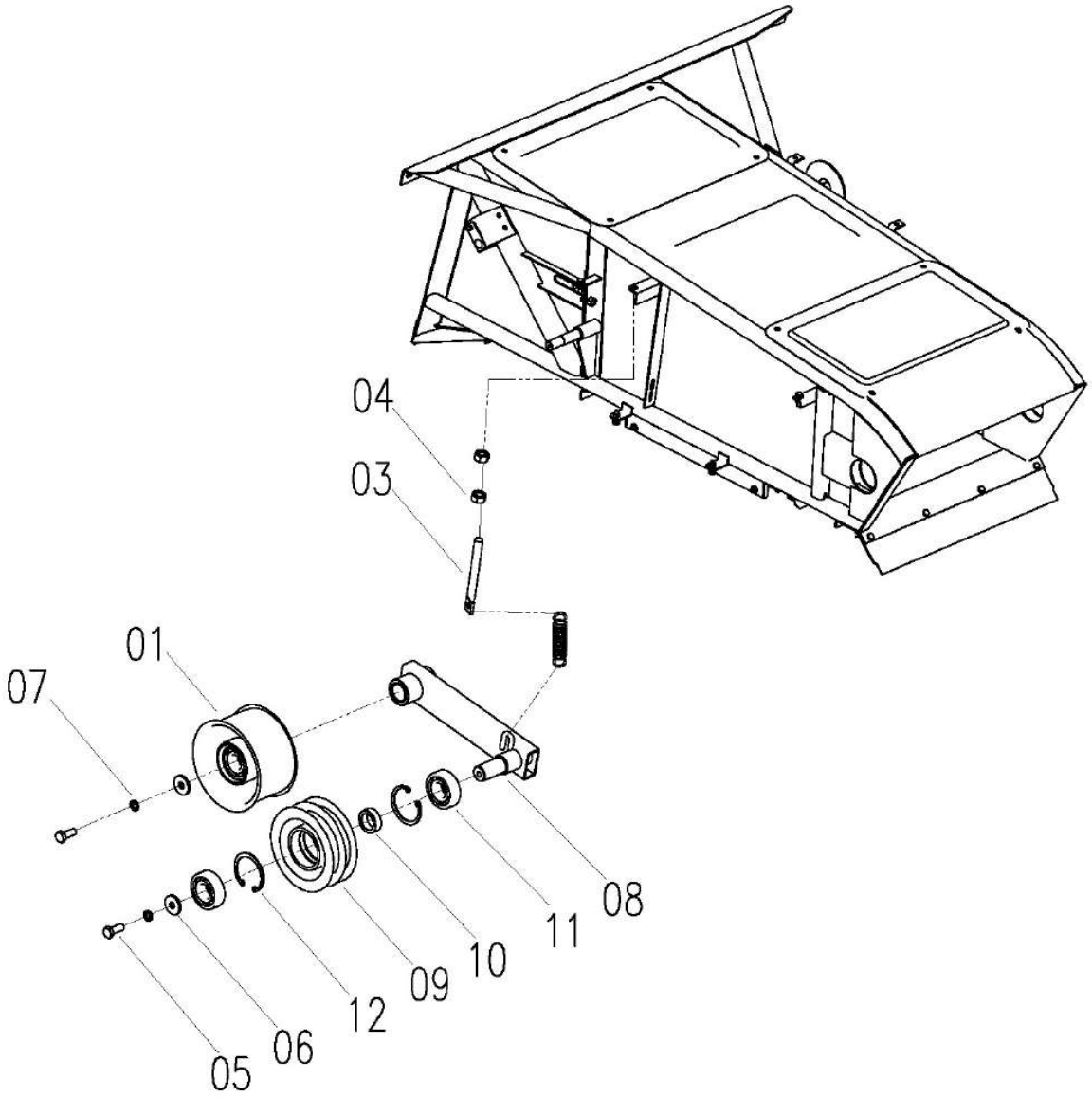

Conveyor Tension Pulley Assy W2.5E-01M-02S-05-00

No.	Description	Qty	Part Code	Remark
01	Tension Pulley Assy	1	W2.5K-02SA-09A-01A-00	
02	Spring	1	W2.0-01-02-05-01	
03	Screw Rod	1	W2.5E-01M-02S-05-05	
04	Nut M10	2	GB/T6170-86	
05	Bolt M8×20	2	GB/T5783-86	
06	Retaining Ring	2	W2.0-02-17-03	
07	Washer 8	2	GB/T93-87	
08	Frame Assy, Tension	1	W2.5E-01M-02S-05-02-00	
09	Tension Pulley	1	W2.0-01-02-05-03	
10	Shaft Sleeve	1	W2.0-02-16-01-03	
11	Bearing 6204-RS	2	GB/T276-94	
12	Circlip for Hole 47	2	GB/T893.1-86	

Note

II. Thresher Part

Upper Assy of Thresher W3.5H-02HB-00

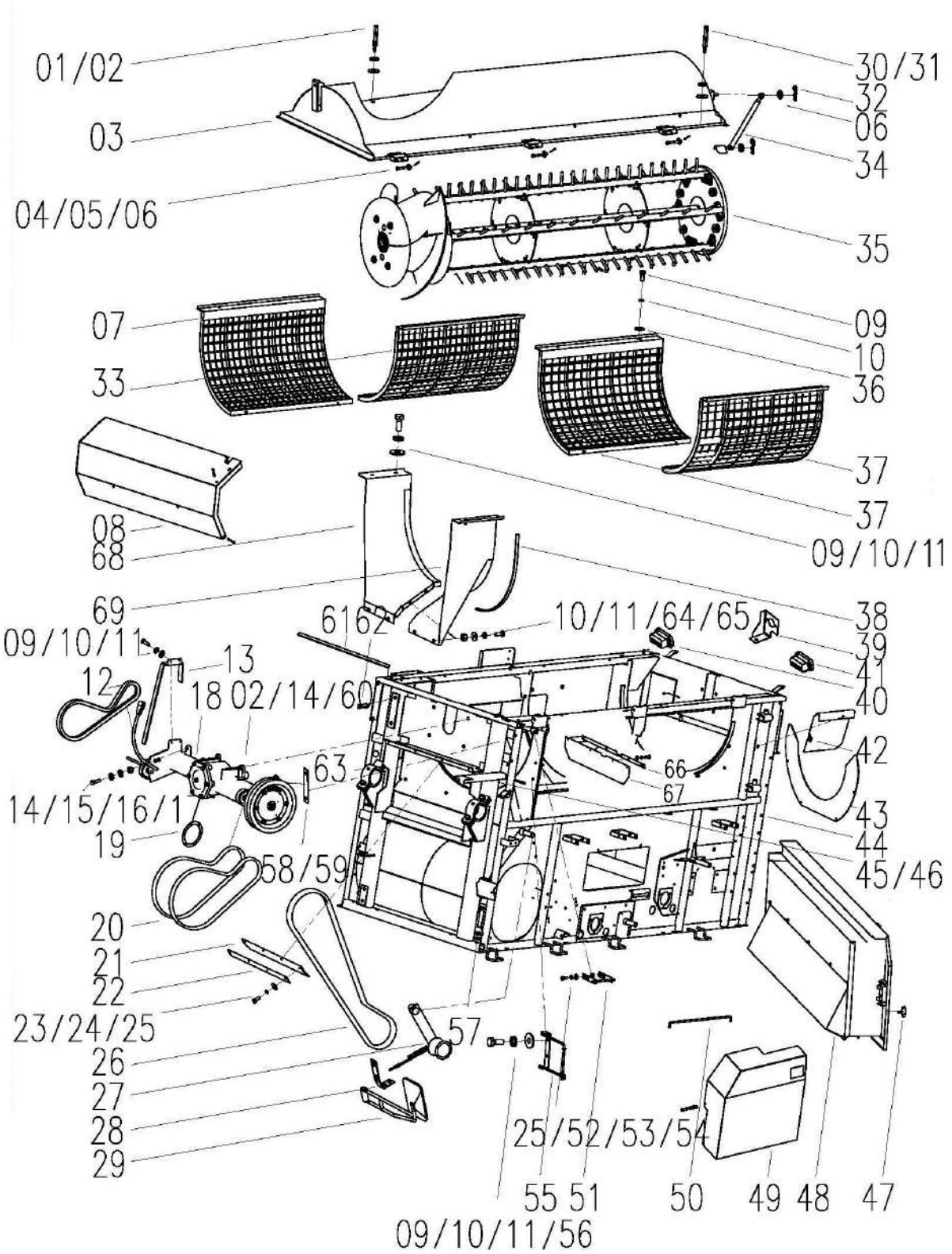

Upper Assy of Thresher W3.5H-02HB-00				
No.	**Description**	**Qty**	**Part Code**	**Remark**
01	Screw Rod	3	W2.5-02-01-33A	
02	Washer, Plain 12	9	GB/T97.1	
03	Drum Cover Assy	1	W2.5K-02HBF-07-00	
04	Pin Shaft-B type 10X95	3	GB/T882	
05	Pin 2.5X20	3	GB/T91	
06	Washer, Plain 10	3	GB97.1-85	
07	Front Concave Screen Weld	1	W2.5-02G-01-04A-00	
08	Gearbox Cover Weld	1	W2.5K-02PD-22-00	One Button return
		1	W2.5K-02PD-22Y-00	One Button return
09	Bolt M8 × 20	33	GB/T5783	
10	Cushion 8	56	GB/T93	
11	Big Washer, Plain 8	34	GB/T96	
12	Reverse SB Belt	1	W2.5-02S-01-38	B Type 1195
13	Reverse Guard	1	W2.5-02-01-13-00	
14	Cushion 12	11	GB/T93	
15	Nut M12	2	GB/T6171	
16	Bolt M12X80	2	GB/T5782	
17	Big Washer, Plain 12	2	GB/T96	
18	Double Transmission Gearbox Assy	1	W2.5K-02P-17A-00	
19	Adjustment Gasket	On demand	W2.5-02-11	2 pcs maximum
20	Gearbox- Upper Shaft 2SB Belt	1	W2.5-02S-01A-37	2HB Type 1490
21	Baffle Plate, Dustproof	1	W2.5-02-01-21	
22	Press Plate	1	W2.5-02-01-20	
23	Bolt M6 × 20	12	GB/T5783	
24	Big Washer, Plain 6	7	GB/T96	
25	Cushion 6	40	GB/T93	
26	Fan-gearbox C-belt	2	W3.5-02-36	C Type 2508（Outer Perimeter）
27	Active Tension Combination	1	W2.5K-02SA-09AC-00	
28	Reflector Mount	1	W2.5K-02PD-56A	
29	Reflector	1	W2.5K-02PD-57	
30	Long Nut M10	1	W2.0-02-23	
31	Washer	1	W2.5K-02PD-60	
32	Pin	2	XSS46-06	
33	Front Concave Screen Weld	1	W2.5-02G-01-04A-00	
34	Air brake	1	W2.5-02G-01-40	
35	Thresher Components	1	W2.5K-02S-02-00	
36	Washer	8	03.03-02	

Upper Assy of Thresher W3.5H-02HB-00

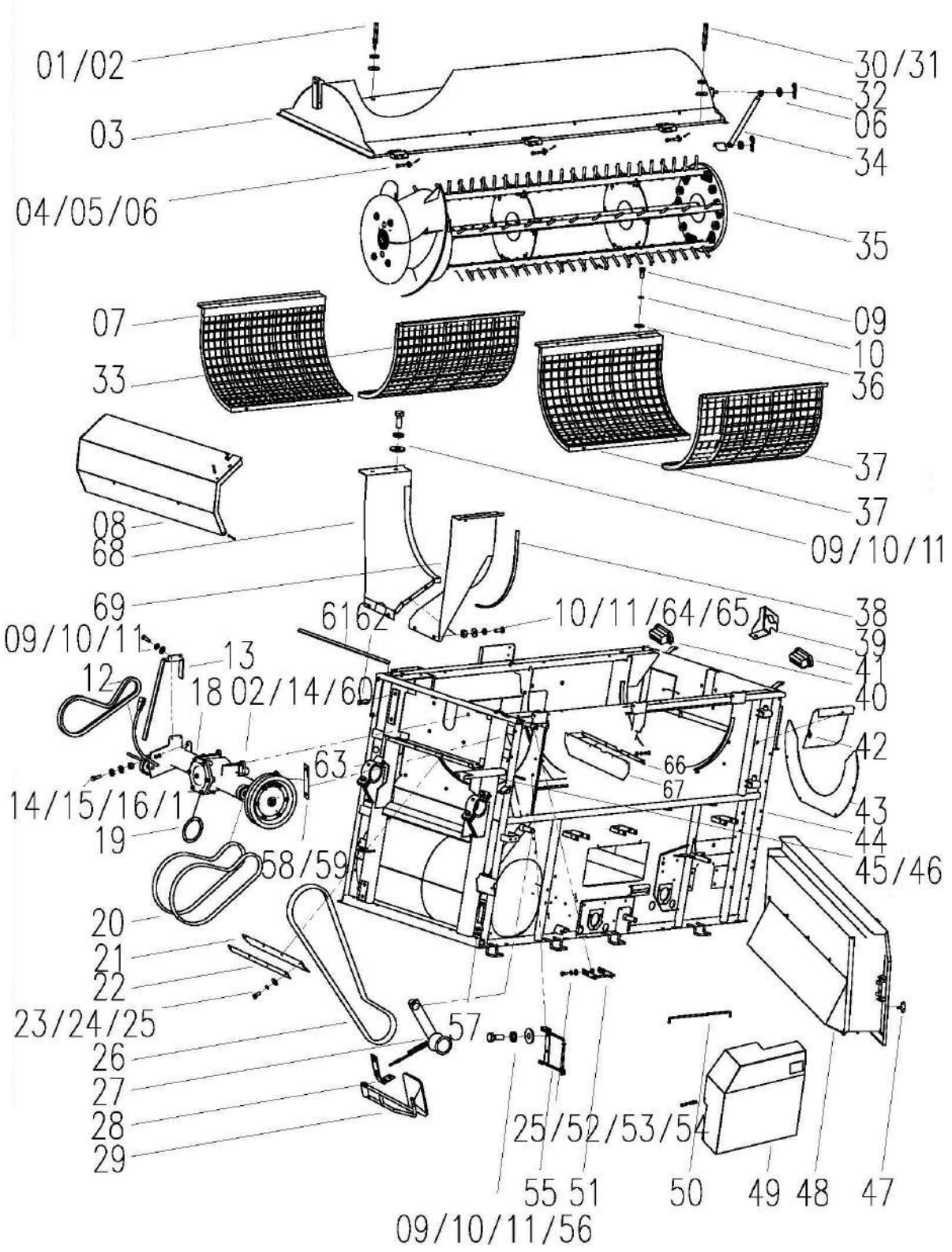

Upper Assy of Thresher W3.5H-02HB-00				
No.	**Description**	**Qty**	**Part Code**	**Remark**
37	Rear Concave Plate Weld	2	W2.5-02G-01-06A-00	
38	Sealing Gasket	2	W2.5-02-01-29	
39	Turn Signal Bracket, Left, Rear	1	W2.5-02-10	
40	Right Beam Plug	1	W2.5K-02PD-09	
41	Left Beam Plug	1	W2.5K-02PD-08	
42	Rowing Tray	1	W3.5H-02HA-16-00	
43	Baffle Plate	1	W2.5-02G-01-41S	
44	Threshing Rack Weld	1	W2.5K-02HC-01-00	Normal Backpack
		1	W3.5H-02HB-01A-00	PLUS Type Backpack（Grain Tank Enlarge）
45	Connection Seat Weld, Cover	1	W2.5K-02PD-11-00	
46	Washer, Plain 8	14	GB/T97.1	
47	Bolt	1	W2.0-01-02-07-00	
48	Cover Assy	1	W2.5K-02P-08-00	
49	Cover Weld, Left, Front, Upper	1	W2.5P-02-20-00	
50	Support Rod	1	W2.5-02-01-32	
51	Hood Weld	4	W2.5P-02-01-11-00	
52	Washer, Plain 6	25	GB/T97.1	
53	Nut M6	17	GB/T6170	
54	Bolt M6 × 18	8	GB/T5783	
55	Side Plate Support	1	W2.5P-02-01-15-00	
56	Bolt M8 × 35	2	GB/T5783	
57	Bolt M10 × 85	2	GB/T5782	
58	Plate	1	W2.5K-02SA-14	
59	Plate	On demand	W2.5K-02SA-15	
60	Bolt M12 × 40 × 1.25	4	GB/T5786	
61	Sealing Sponge	1	W2.5K-02PD-07	
62	Bolt M12 × 35 × 1.25	2	GB/T5786	
63	Oil Cup M8 × 1	2	JB/T7940.1	
64	Nut M8	8	GB/T6170	
65	Bolt M8 × 25	14	GB/T5783	
66	Press Plate	1	W2.5-02-01-23	
67	Canvas (front)	1	W2.5K-02HG-30	
68	Left Inlet Weld	1	W2.5-02G-01-05-00	
69	Right Inlet Weld	1	W2.5-02G-01-03-00	

Lower Assy of Thresher W3.5H-02HB-00

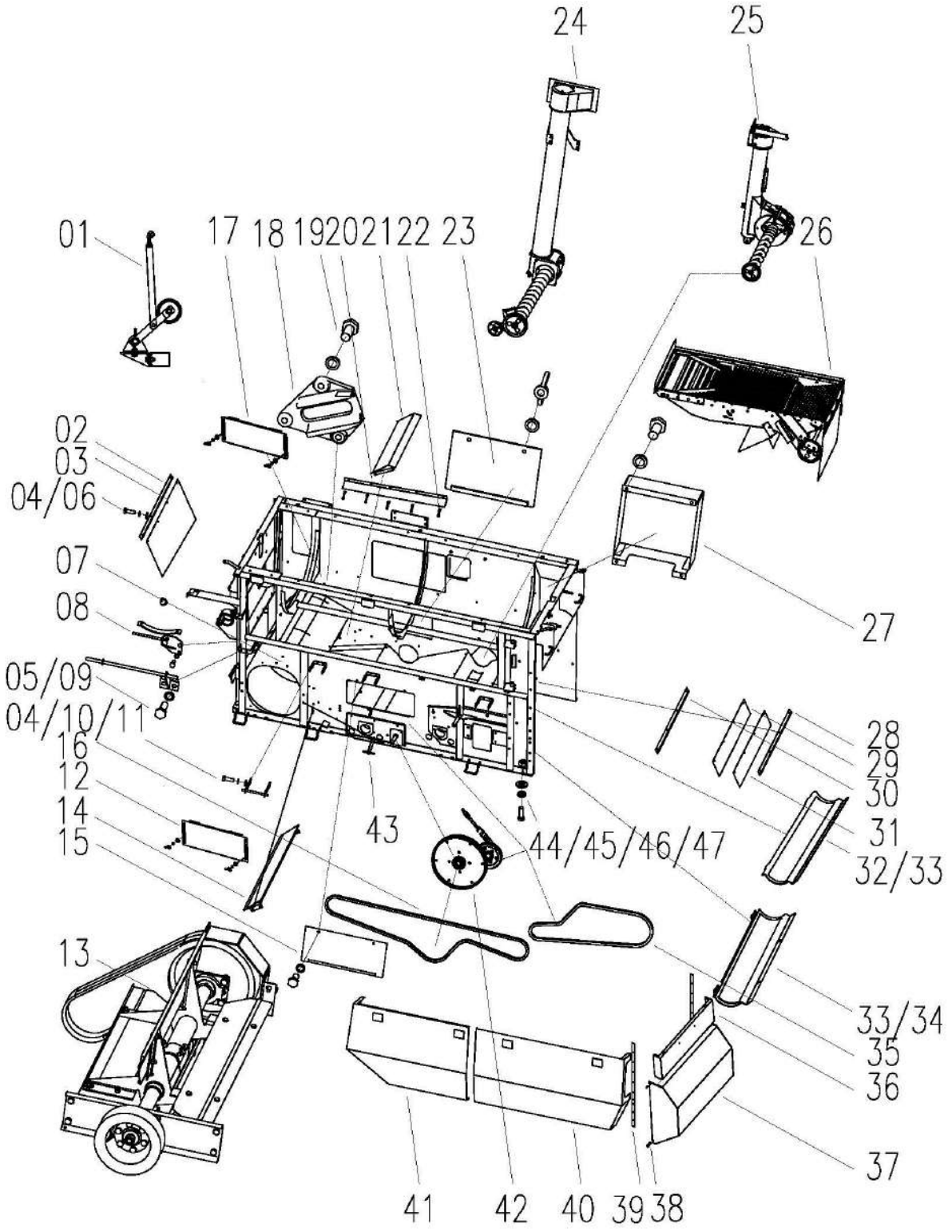

Lower Assy of Thresher W3.5H-02HB-00				
No.	**Description**	**Qty**	**Part Code**	**Remark**
01	Main Clutch Tension Assy	1	W2.5C-02-02-22C-00	Sun-roof
		1	W2.5C-02-02-22E-00	Cabin
02	Press plate	1	W2.5K-02HG-40	
03	Hide	1	W2.5K-02HX-31	
04	Cushion 6	40	GB/T93	
05	Bolt M6 × 18	2	GB/T97.1	
06	Big Washer 6	5	GB/T96	
07	Oil Cup M6	2	JB/T7940.1	
08	Bracket Combination	1	W2.5K-02HX-26-00	
09	Bolt M8 × 25	14	GB/T5783	
10	Washer, Big 6	25	GB/T97.1	
11	Nut M6	17	GB/T6170	
12	Windshield Combination	1	W2.5K-02HX-11-00	
13	Fan Assy	1	W2.5K-02HB-05-00	
14	Plate Weld (wind direction, 2)	1	W2.5K-02HG-04-00	
15	Cover (left)	1	W2.5-02-02-28	
16	Fan-Auger-Transition Drive Belt	1	W2.5K-02HB-36	C Type Outer perimeter 3259
17	Windshield Combination	1	W2.5K-02HX-11-00	
18	Guide Plate (shake screen)	2	W2.5-02-02-02	
19	Bolt M8 × 25 × 1	6	GB/T5786	
20	Front Deflector	1	W2.5K-02HC-18	
21	Plate Weld (wind direction 1)	1	W2.5K-02HG-03-00	
22	Bolt M6 × 16	10	GB/T5783	
23	Cover (right)	1	W2.5-02-02-08	
24	Grain Auger Assy	1	W2.5K-02HBF-10-00	Normal Backpack
		1	W3.5H-02HB-10-00	PLUS Type Backpack（Grain Tank Enlarge）
25	Impurity Assy	1	W3.5H-02HB-11-00	
26	Vibrating Screen Assy	1	W3.5H-02HA-13-00	
27	Cover (shake, right)	1	W2.5K-02H-18	
28	Plate (screw box)	1	W2.5K-02HC-02-16	
29	Gasket No. 2	1	W2.5K-02HC-02-15	
30	Plate (screw box)	1	W2.5K-02HC-02-14	
31	Hide	1	W2.5K-02HC-17	
32	Impurity Seat	1	W2.5-02-02-07	
33	Sealing Sponge	4	W2.5-02-02-32	
34	Grain Bottom Plate Weld	1	W2.5K-02PC-06-00	
35	Driving Belt, Baler	1	W3.5-16-20-03	B Outer perimeter1960
36	Cover Weld, Rear	1	W2.5-02-21A-00	

Lower Assy of Thresher W3.5H-02HB-00

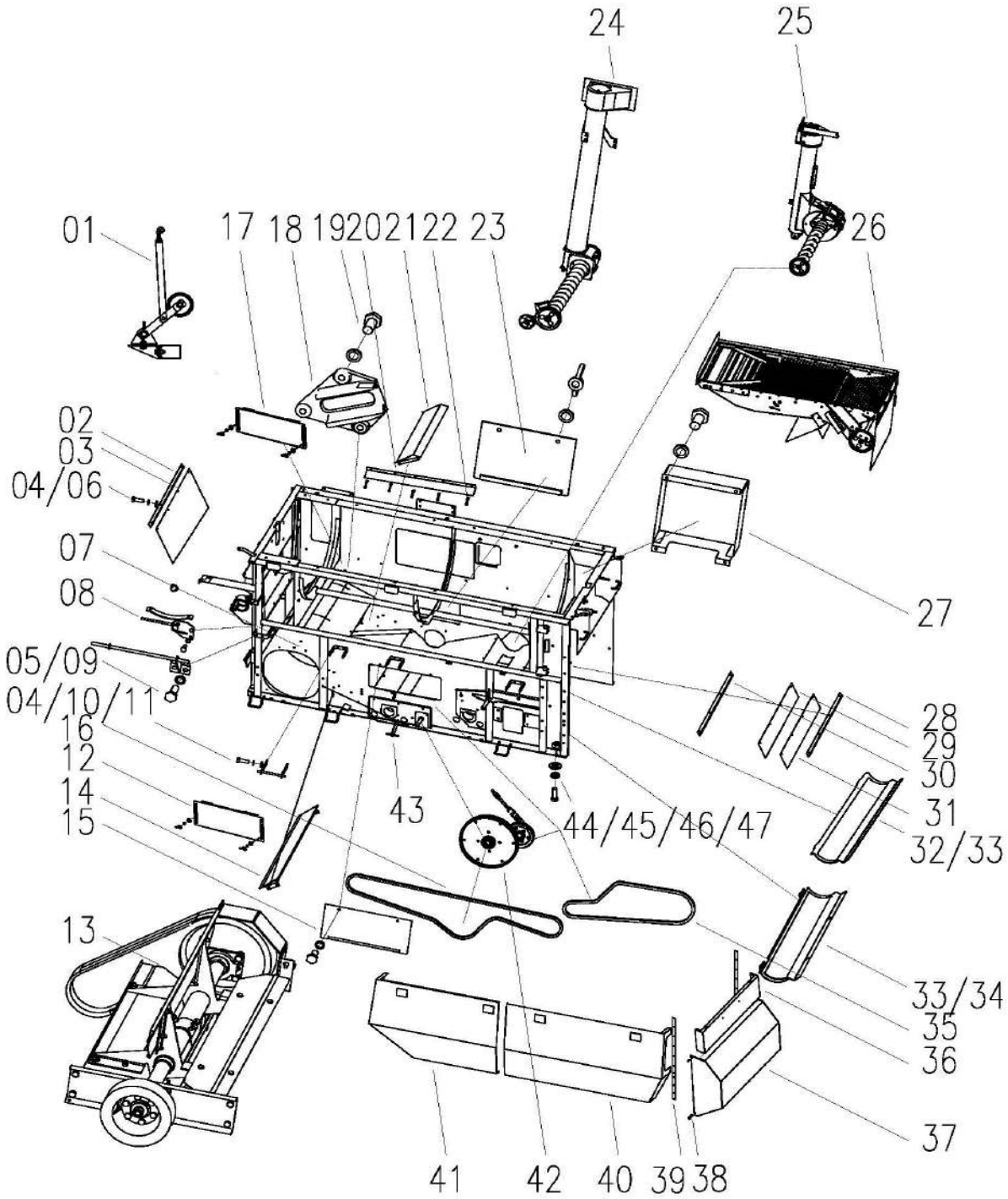

Lower Assy of Thresher W3.5H-02HB-00				
No.	**Description**	**Qty**	**Part Code**	**Remark**
37	Cover Weld, Lower, Rear	1	W3.5H-02HA-23A-00	
38	Bolt M8 × 18	4	GB/T5783	
39	Sealing Gasket	2	W2.5K-02PD-10	
40	Cover Assy, Left	1	W2.5K-02HX-25-00	
41	Cover Assy, Front	1	W2.5K-02HX-24-00	
42	Tension Wheel Combination	1	W3.5H-02HA-12-00	
43	Buckle Weld	1	W2.5K-02PA-40-00	
44	Bolt M10 × 25	16	GB/T5783	
45	Cushion 10	19	GB/T93	
46	Washer, Big	22	WD-150.01.26-01	
47	Nut M10	18	GB/T6170	

Thresher Components W2.5K-02S-02-00

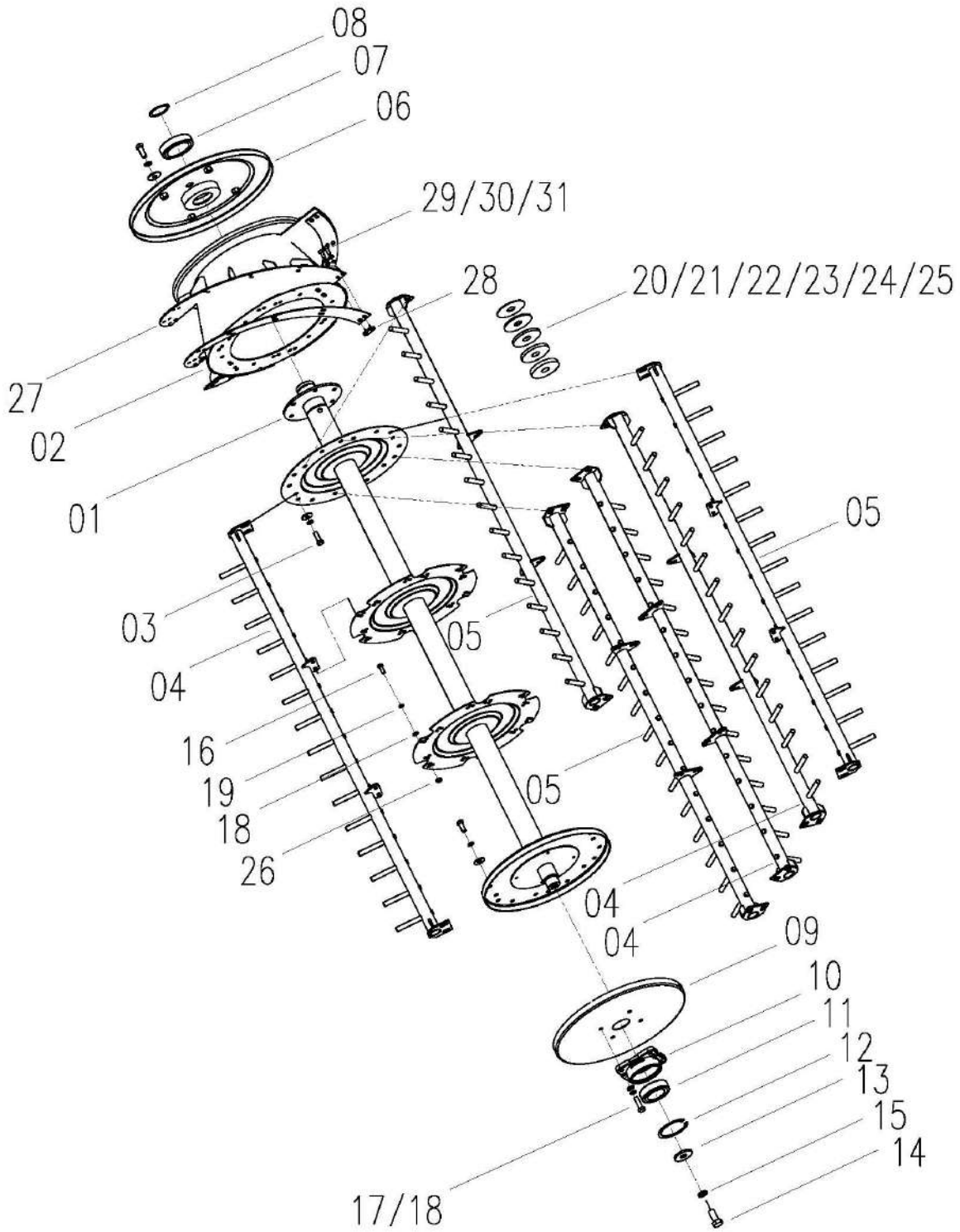

Thresher Components W2.5K-02S-02-00				
No.	**Description**	**Qty**	**Part Code**	**Remark**
01	Shaft Weld	1	W2.5K-02S-02-01-00A	
02	Feeding Auger	1	W2.5K-02S-02-02-00B	
03	Bolt M10 × 30 × 1.25	12	GB/T5786	10.9 Level
04	Rack Weld A	3	W2.5K-02S-02-03-00A	
05	Rack Weld B	3	W2.5K-02S-02-04-00A	
06	Front Panel Weld	1	W2.5-02-01-02-05-00	
07	Bearing, Front, Threshing Cylinder 6210-2RS	1	W2.5-02S-01-02-20	
08	Retaining Ring for Shaft 50	1	GB/T894.1-86	
09	Rear Panel Weld	1	W2.5-02-01-02-06-00	
10	Bearing Block, Rear	1	W2.5-02-01-02-12	
11	Bearing, Rear, Threshing Cylinder 6307-2RS	1	W2.5-02S-01-02-21	
12	Retaining Ring for Bore 80	1	GB/T893.1	
13	Retaining Ring	1	W2.5-02-01-02-13	
14	Bolt M16 × 35 × 1.5	1	GB/T5786-86	
15	Washer 16	1	GB93-87	
16	Bolt M10 × 25 × 1.25	54	GB/T5786	10.9 Level
17	Bolt M10 × 35 × 1.25	4	GB/T5786	
18	Washer 10	70	GB/T93	
19	Big Washer, Plain 10	66	GB/T96-85	
20	Balance Weight 1	On demand	W2.5-02G-01-02-14	
21	Balance Weight 2	On demand	W2.5-02G-01-02-15	
22	Balance Weight 3	On demand	W2.5-02G-01-02-16	
23	Balance Weight 4	On demand	W2.5-02G-01-02-17	
24	Balance Weight 5	On demand	W2.5-02G-01-02-18	
25	Balance Weight 6	On demand	W2.5-02G-01-02-19	
26	Nut M10X1.25	24	GB/T6171	
27	Spiral Plate	2	W2.5K-02S-02-02-08B	
28	Nut Plate	14	W2.5-02-01-02-11	
29	Screw M8 × 20	28	GB/T70-85	
30	Washer 8	28	GB/T97.1	
31	Washer 8	28	GB/T93	

Active Tension Combination W2.5K-02SA-09AC-00

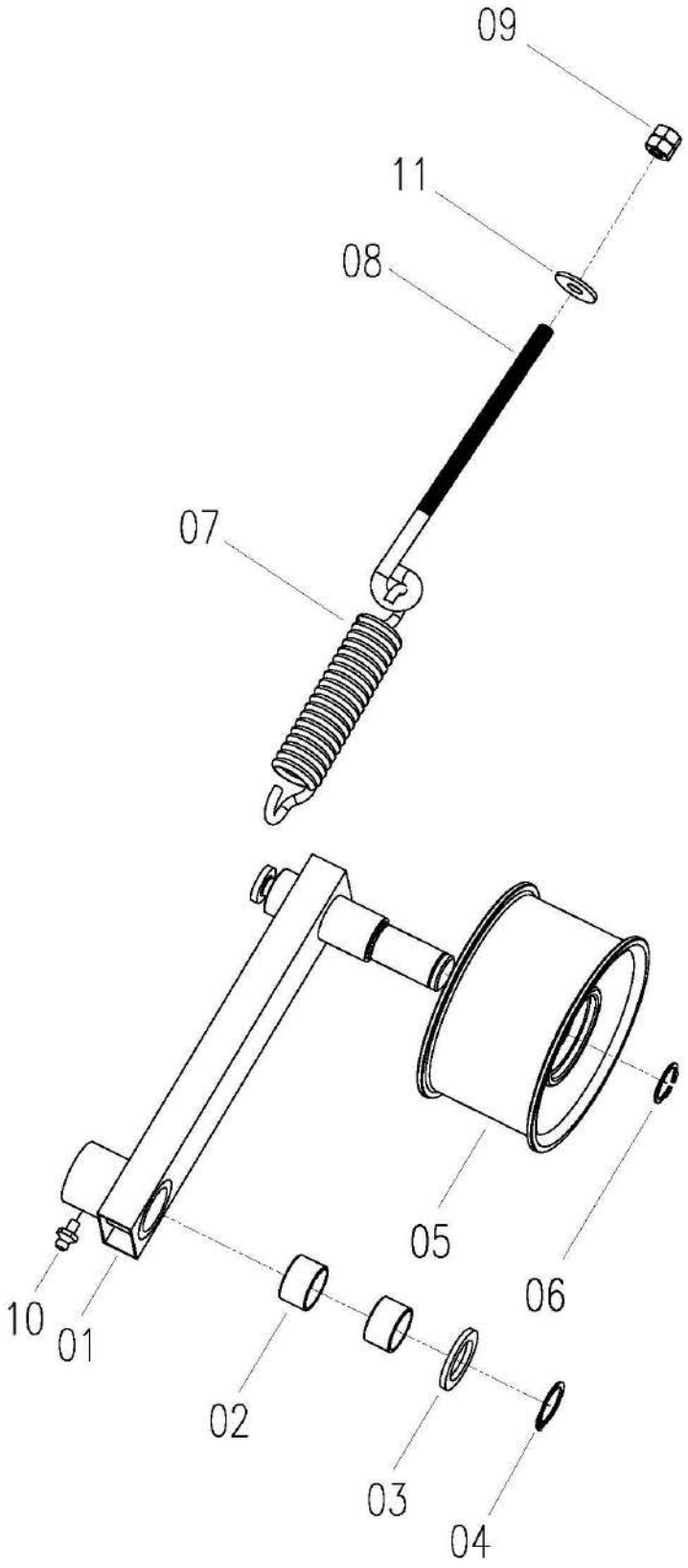

Active Tension Combination W2.5K-02SA-09AC-00				
No.	**Description**	**Qty**	**Part Code**	**Remark**
01	Tension Arm Weld	1	W2.5K-02SA-09B-02-00	
02	Bearing (1620)	2	W2.5-02-01-14-05	
03	Washer	1	W2.5-02-01-14-02	
04	Retaining Ring 22	1	GB/T894.1-86	
05	Tension Wheel Combination	1	W2.5K-02SA-09A-01A-00	
06	Retaining Ring 20	1	GB/T894.1-86	
07	Tension Spring (threshing)	1	W2.5-02-02-10-08A	
08	Tension Bolt	1	W2.5K-02S-09-01	
09	Nut M8	2	GB/T6170-86	
10	Oil Cup M6	1	JB/T7940.1	
11	Washer 8	1	GB/T96-85	

Tension Wheel Assy W2.5K-02SA-09A-01A-00

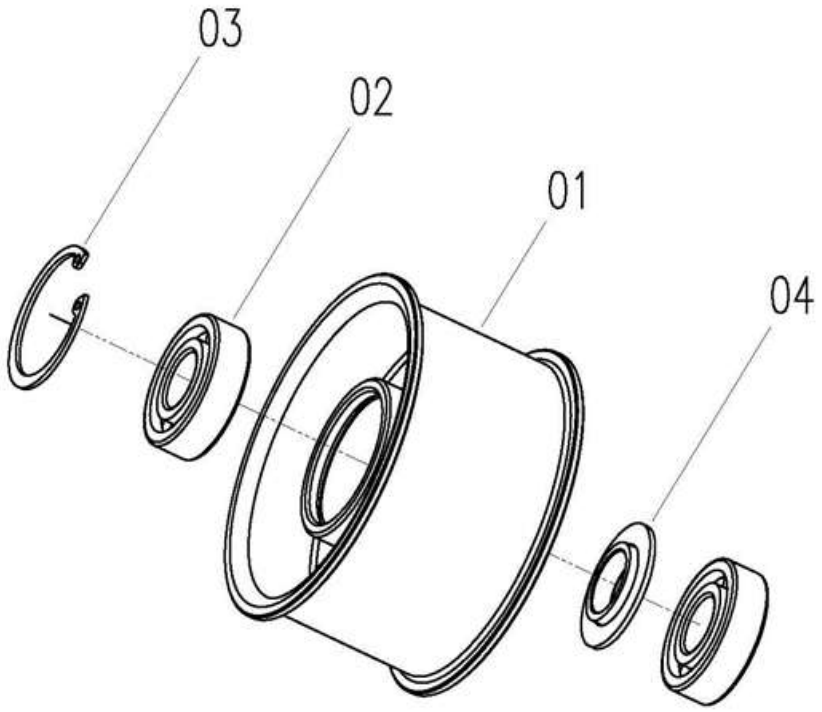

No.	Description	Qty	Part Code	Remark
01	Tension Wheel	1	W2.5K-02SA-09A-01A-01	
02	Bearing 6204-2RS	2	W2.5K-02SA-09A-01-03	
03	Circlip for Hole 47	1	GB/T893.1	
04	Shaft Sleeve Weld	1	W2.5-02-56C-31-02-02-00	

Threshing Cover Assy W2.5K-02HBF-07-00

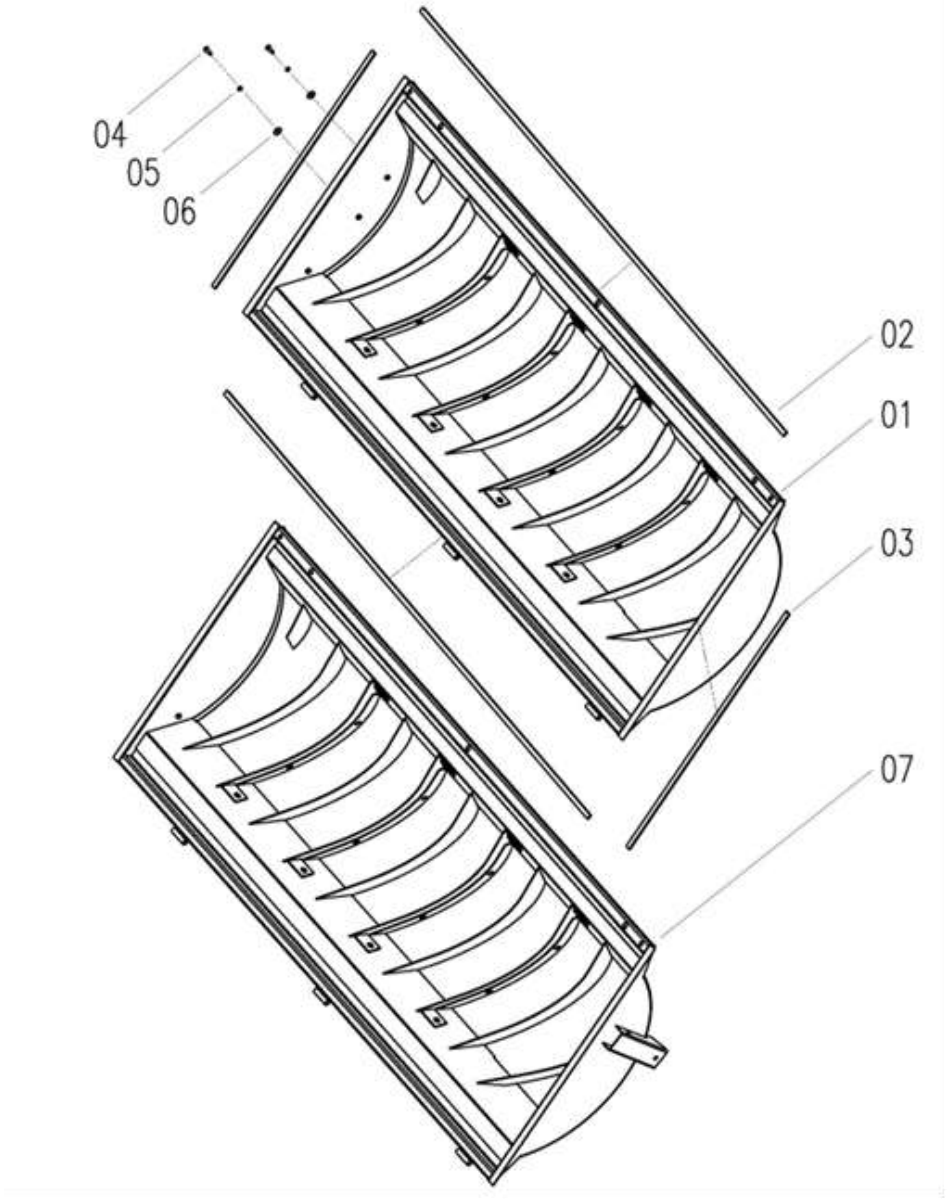

No.	Description	Qty	Part Code	Remark
01	Cylinder Cover Weld	1	W2.5-02HX-07-01-00	Backpack Type/Grain Tank Upright Unloading Type
02	Gasket, Seal A	2	W2.5-02G-01-07-03	
03	Gasket, Seal B	2	W2.5-02G-01-07-04	
04	Bolt M6X16	2	GB/T5783	
05	Washer 6	2	GB/T93	
06	Washer 6	2	GB/T96	
07	Cylinder Cover Weld	1	W2.5K-02HBF-07-01-00	Grain Tank 360 Degree Unloading Type

Cover Plate Assy W2.5K-02P-08-00

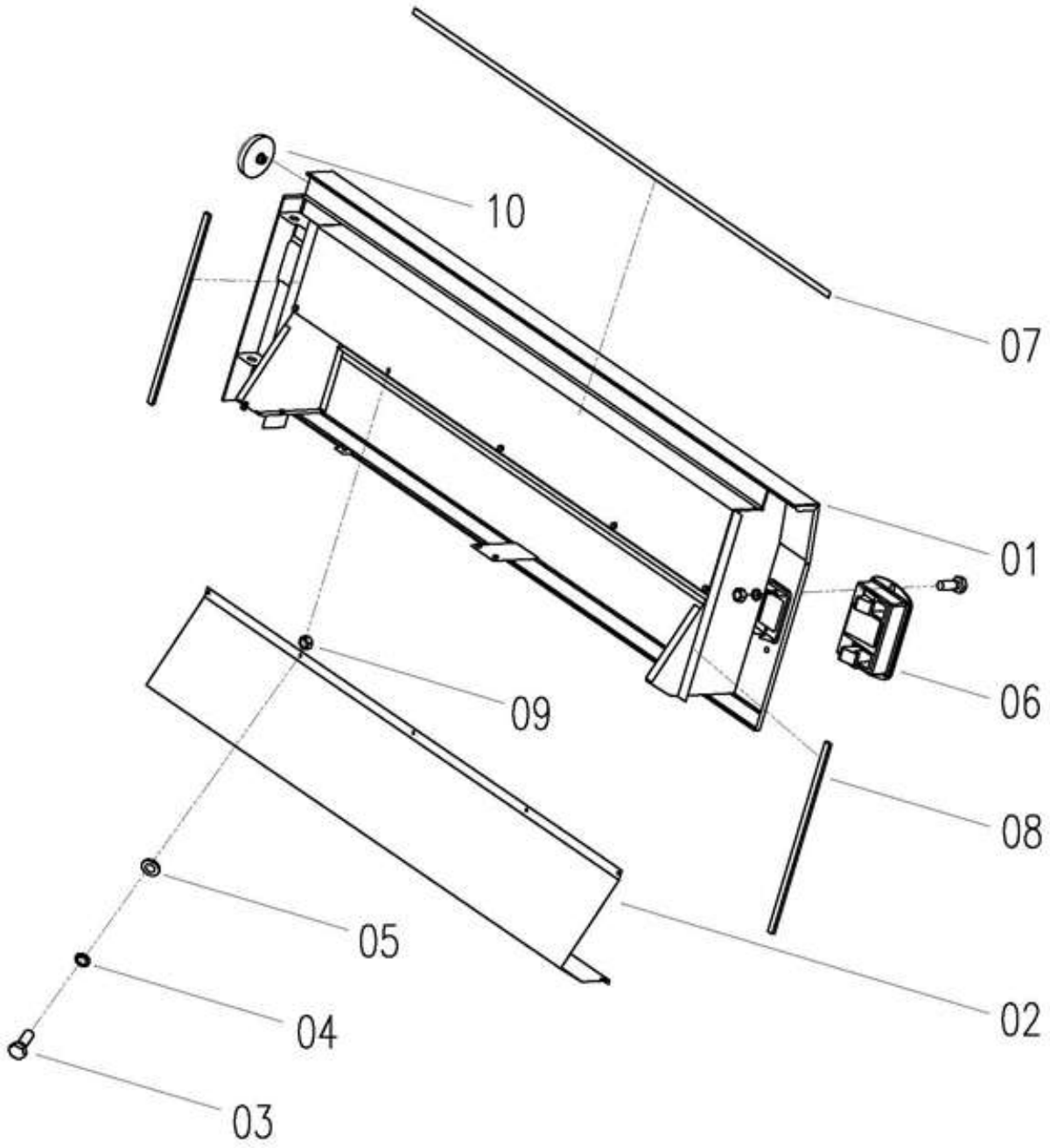

Cover Plate Assy W2.5K-02P-08-00

No.	Description	Qty	Part Code	Remark
01	Cylinder Cover Weld	1	W2.5K-02P-08-01-00	
02	Plate, Open/Close	1	W2.5K-02P-08-02-00	
03	Bolt M6X16	17	GB/T5783-86	
04	Washer 6	16	GB/T93-86	
05	Washer 6	14	GB/T97.1-86	
06	Buckle	1	WD.2MA.73-02	
07	Gasket, Seal A	2	W2.5-02G-01-08-03	
08	Gasket, Seal B	2	W2.5-02G-01-08-04	
09	Nut M6	6	GB6170-86	
10	Back Reflector	1	W2.0-02-02-04-00	

Double Transmission Gearbox Assy W2.5K-02P-17A-00

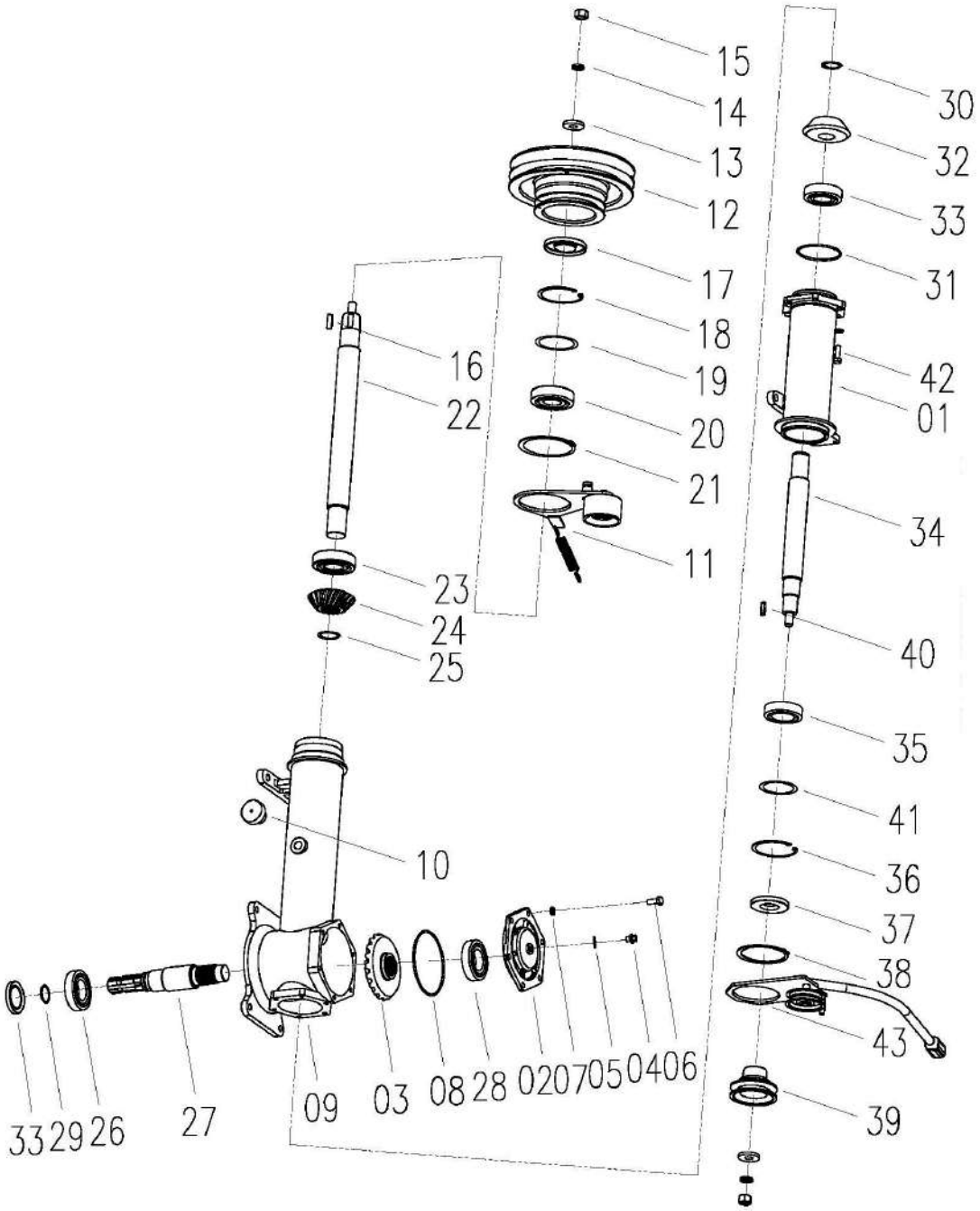

Double Transmission Gearbox Assy W2.5K-02P-17A-00				
No.	**Description**	**Qty**	**Part Code**	**Remark**
01	Right Housing	1	W2.5-02S-01-17-01-00	
02	Gearbox Cover	1	W2.5-02A-01-17-02	
03	Driven Bevel Gear	1	W2.5-02A-01-17-10	
04	Bolt M10×1	2	JB/ZQ4450-86	
05	Washer, Seal 10	2	JB982-77	
06	Bolt M10×25	6	GB/T5783-86	
07	Washer 10	12	GB/T93-87	
08	O Ring132×3.55	1	GB/T3452.1-92	
09	Left Housing	1	W2.5-02S-01-17-03	
10	Plug	1	W2.5-02S-01-17-08	
11	Tension Pulley Assy	1	W2.5-02B-01G-17-18-00	
12	Pulley, Auxiliary	1	W2.5K-02P-01A-17-04	
13	Retaining Ring 17-45	2	W2.5-02A-01-17-04	
14	Gasket 16	2	GB/T93-87	
15	Nut M16×1.5	2	GB/T6171-86	
16	Key 10×32	1	GB/T1099-79	
17	Oil Seal 40×90×10	1	W2.5-02A-01-17-11	
18	Circlip for Hole 90	1	W2.5K-02P-17A-10A	
19	Washer, Adjusting	On demand	W2.5-02S-01-17-16	
20	Bearing 6308-RS	1	GB/T276-94	
21	Circlip for Shaft 110	1	GB/T894.1-86	
22	Main Transmission Shaft	1	W2.5-02S-01-17-05	
23	Bearing 6308	1	GB/T276-94	
24	Active Bevel Gear	1	W2.5-02A-01-17-06	
25	Circlip for Shaft 40	1	GB/T894.1-86	
26	Bearing 6209	1	GB/T276-94	
27	Driven Shaft	1	W2.5-02S-01-17-09	
28	O Ring 33.5×2.65	1	GB/T3452.1-82	
29	Oil Seal 45×68×10	1	W2.5-02S-01-17-14	
30	Circlip for Shaft 35	1	GB/T894.1-86	
31	O Ring 87.5×3.55	1	GB/T3452.1-82	
32	Driven Bevel Gear	1	W2.5-02S-01-17-07	
33	Bearing 6307	2	GB/T276-94	
34	Shaft	1	W2.5-02S-01-17-12	
35	Bearing 6307-RS	1	GB/T276-94	
36	Circlip for Hole 80	1	GB/T893.1-86	
37	Oil Seal 35×80×10	1	W2.5-02S-01-17-15	
38	Circlip for Shaft 100	1	GB/T894.1-86	
39	Belt Pulley	1	W2.5-02S-01-17-13	
40	Key 7×30	1	GB/T1090-79	

Double Transmission Gearbox Assy W2.5K-02P-17A-00

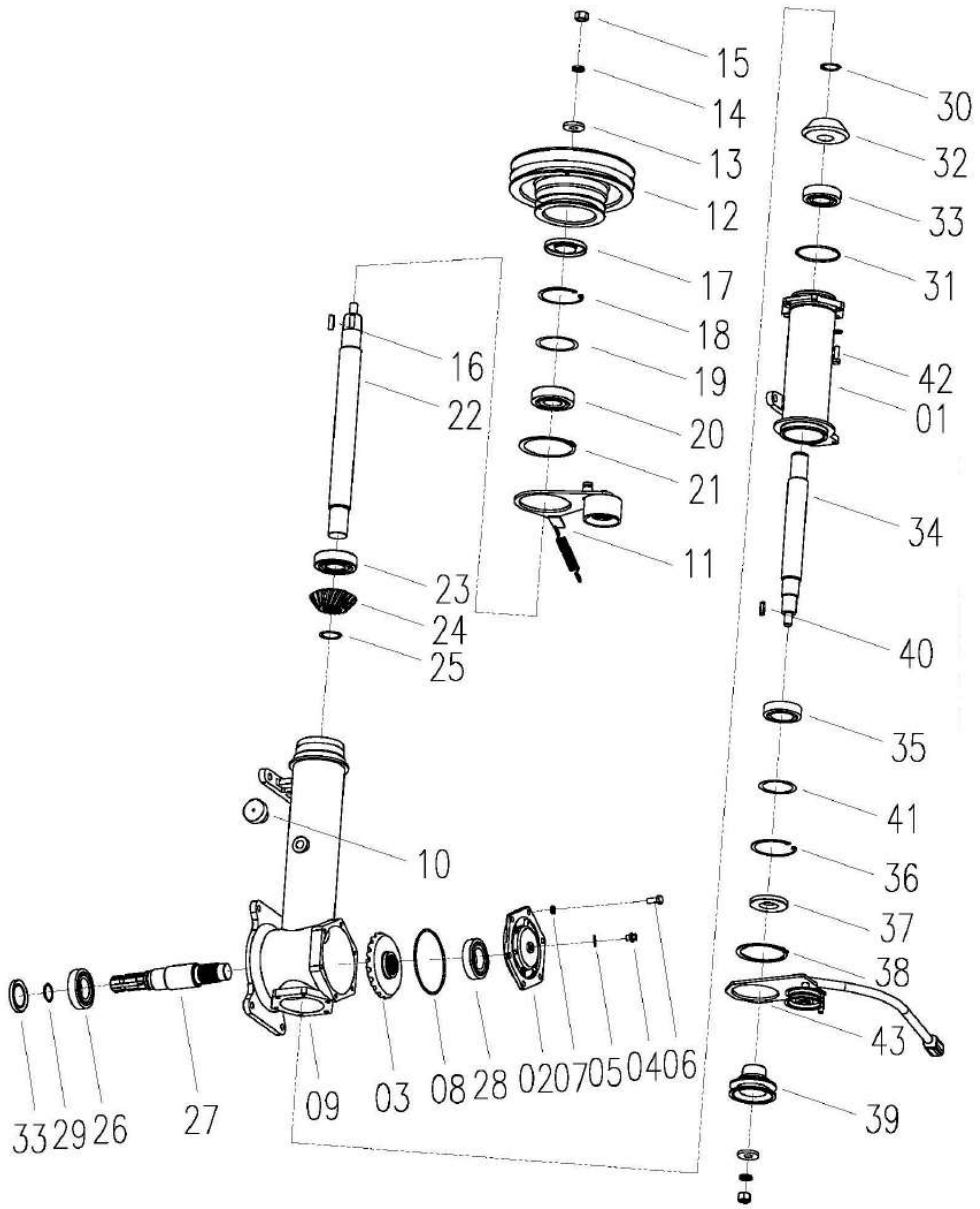

Double Transmission Gearbox Assy W2.5K-02P-17A-00				
No.	**Description**	**Qty**	**Part Code**	**Remark**
41	Washer, Adjusting	1	W2.5-02S-01-17-17	
42	Bolt M10×30	6	GB/T5783-86	
43	Handle Assy	1	W2.5C-02-01-09-00	

Work Tension Pulley Assy W2.5-02B-01G-17-18-00

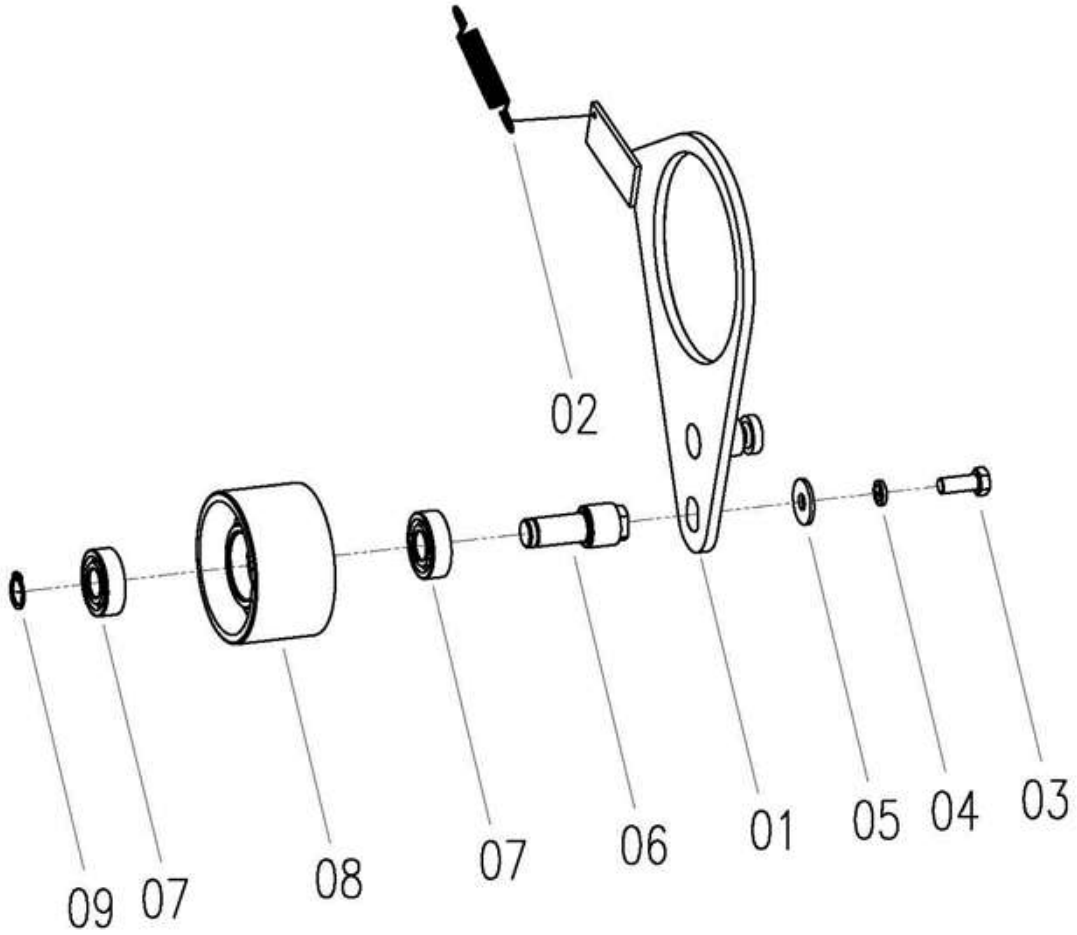

No.	Description	Qty	Part Code	Remark
01	Tension Arm	1	W2.5-02B-01G-17-18-02-00	
02	Spring	1	W2.5-02-01-10-03	
03	Bolt M8×20	1	GB/T5783-86	
04	Retaining Ring 8	1	GB/T96-85	
05	Retaining Ring 8	1	GB/T93-87	
06	Shaft	1	W2.5-02B-01G-17-18-01-02	Tension Pulley Assy W2.5-02B-01G-17-18-01-00(06,07,08,09)
07	Bearing 6202-2RS	2	W2.5-02B-01G-17-18-01-03	
08	Tension Wheel	1	W2.5-02B-01G-17-18-01-01	
09	Retaining Ring 15	1	GB/T894.1-86	

Re-thresher Housing Assy W3.5H-02HB-11-03-00

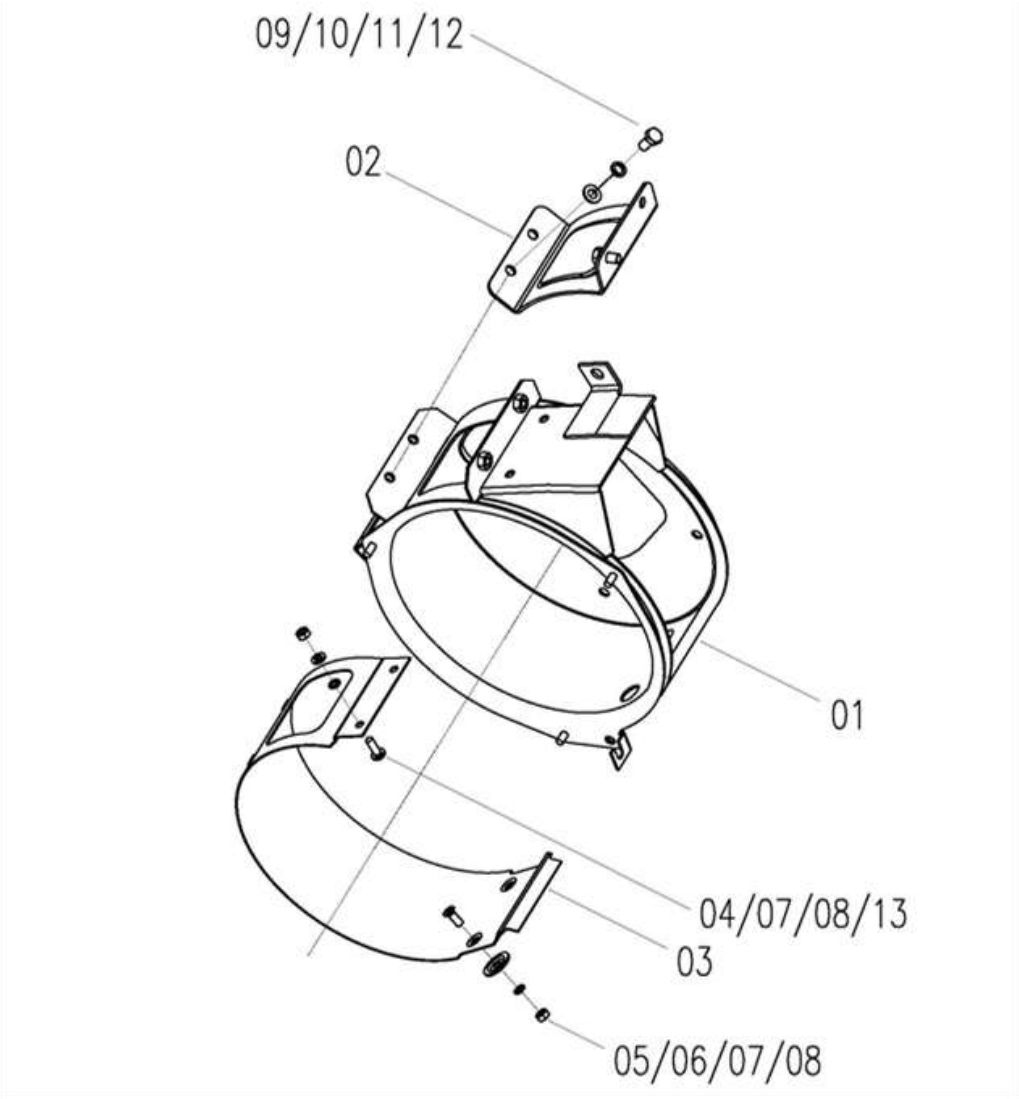

No.	Description	Qty	Part Code	Remark
01	Housing Weld, Re-threshing	1	W3.5H-02HB-11-03-01-00	
02	Cover Weld, Observe	1	W3.5H-02HB-11-03-02-00	
03	Inner Plate, Re-thresher	1	W3.5H-02HB-11-03-03	
04	Screw M6×16	2	GB/T67	
05	Screw M6×18	2	GB/T819.1	
06	Washer	2	WD-150-03.04-20	
07	Washer 6	4	GB/T93	
08	Nut M6	4	GB/T6170	
09	Flat washer 8	8	GB/T97.1	
10	Washer 8	4	GB/T93	
11	Bolt M8×20	4	GB/T5783	
12	Bolt M6	4	GB/T6170	
13	Big washer 6	2	GB/T96	

Fan Assy W2.5K-02HB-05-00

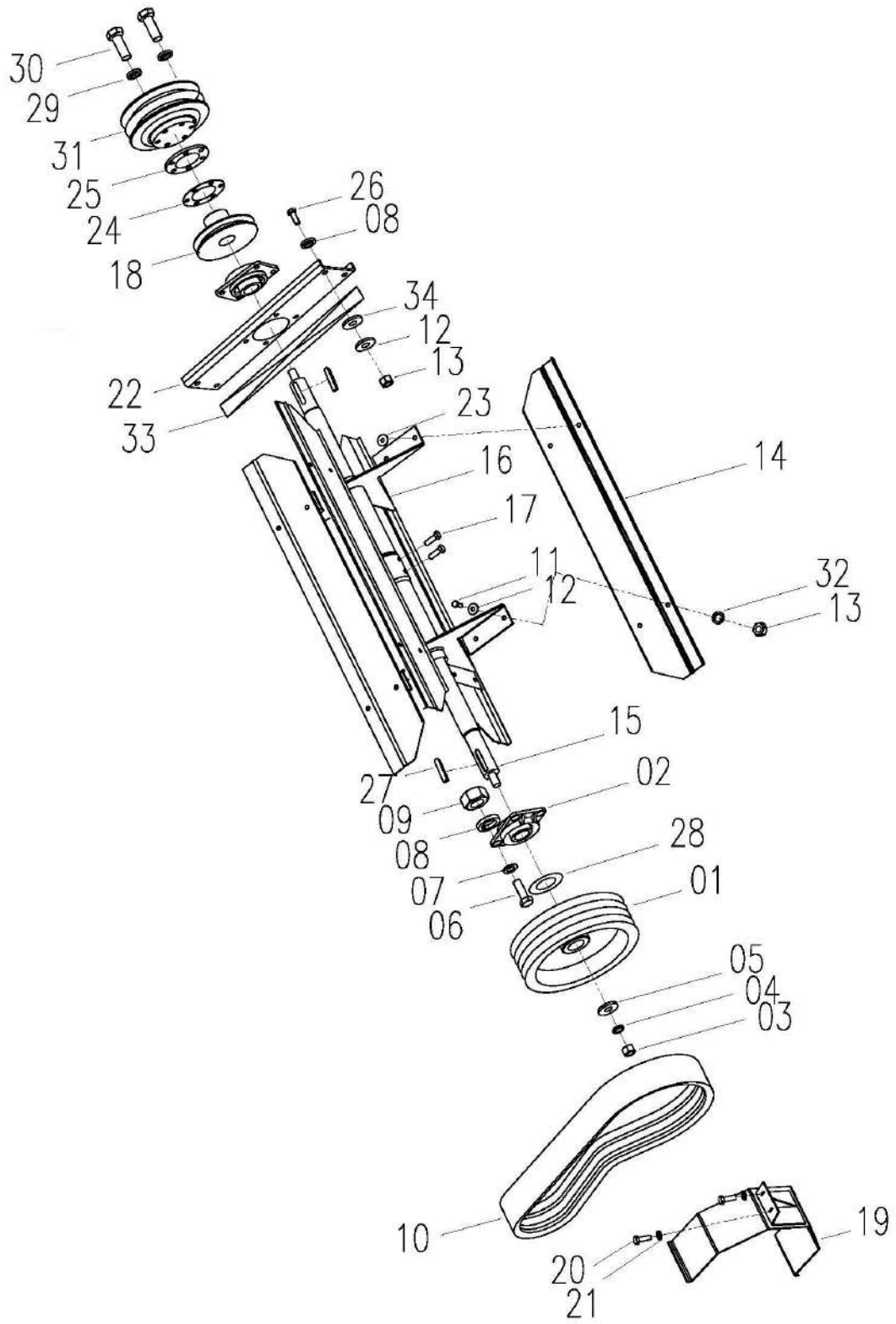

Fan Assy W2.5K-02HB-05-00				
No.	**Description**	**Qty**	**Part Code**	**Remark**
01	Belt Pulley, Fan	1	W2.5C-02-02-05-06A	
02	Bearing Combination		W2.5-02B-02-05-03-00	
03	Retaining Ring	2	W2.5-02B-02-05-12	
04	Nut M16×1.5	2	GB/T6176	
05	Washer 16	2	GB/T93	
06	Bolt M10×30	8	GB/T5783	
07	Washer 10	8	GB/T97.1	
08	Washer 10	12	GB/T93	
09	Nut M10	4	GB/T6170	
10	Belt, Active Transmission, Fan	1	W2.5C-02-02-05-10A	Combine Belt 4HB Outer Perimeter1490
11	Bolt M8×20	12	GB/T5783	
12	Washer 8	22	GB/T93	
13	Nut M8	18	GB/T6170	
14	Blade, Fan	4	W2.5K-02HX-05-08	
15	Shaft, Fan	1	W2.5P-02-02-05-01	
16	Frame Weld, Fan	1	W2.5-02B-02-05-07-00	
17	Bolt M10×1×20	4	GB/T5786	10.9 Level
18	Hub	1	W2.5K-02HB-05-15	
19	Frame Assy	1	W2.5C-02-02-05-09-00	
20	Bolt M8×25	4	GB/T5783	
21	Washer 8	2	GB/T96	
22	Plate Weld, Fixing, Left	1	W2.5K-02HB-05-02-00	
23	Balance Block	On demand	W3.0B-02-09-01-03	
24	Washer, Adjusting	On demand	W2.5-02B-02-05-13	
25	Plate	1	W2.5P-02-02-05-19	
26	Bolt M10X25	4	GB/T5783	
27	Key A Type C10×60	2	GB/T1096	
28	Adjustment Gasket	On demand	WD.2F.15-08	
29	Washer 10	6	GB/T93	
30	Bolt M10X55	6	GB/T5783-86	Using M10X60 Bolt If Needed
31	Belt Pulley	1	W2.5-02B-02-05-16	
32	Washer 8	16	GB/T96	
33	Net	1	W2.5P-02-02-05-03	
34	Washer	4	03.03-02	

Impurity Assy W3.5H-02HB-11-00

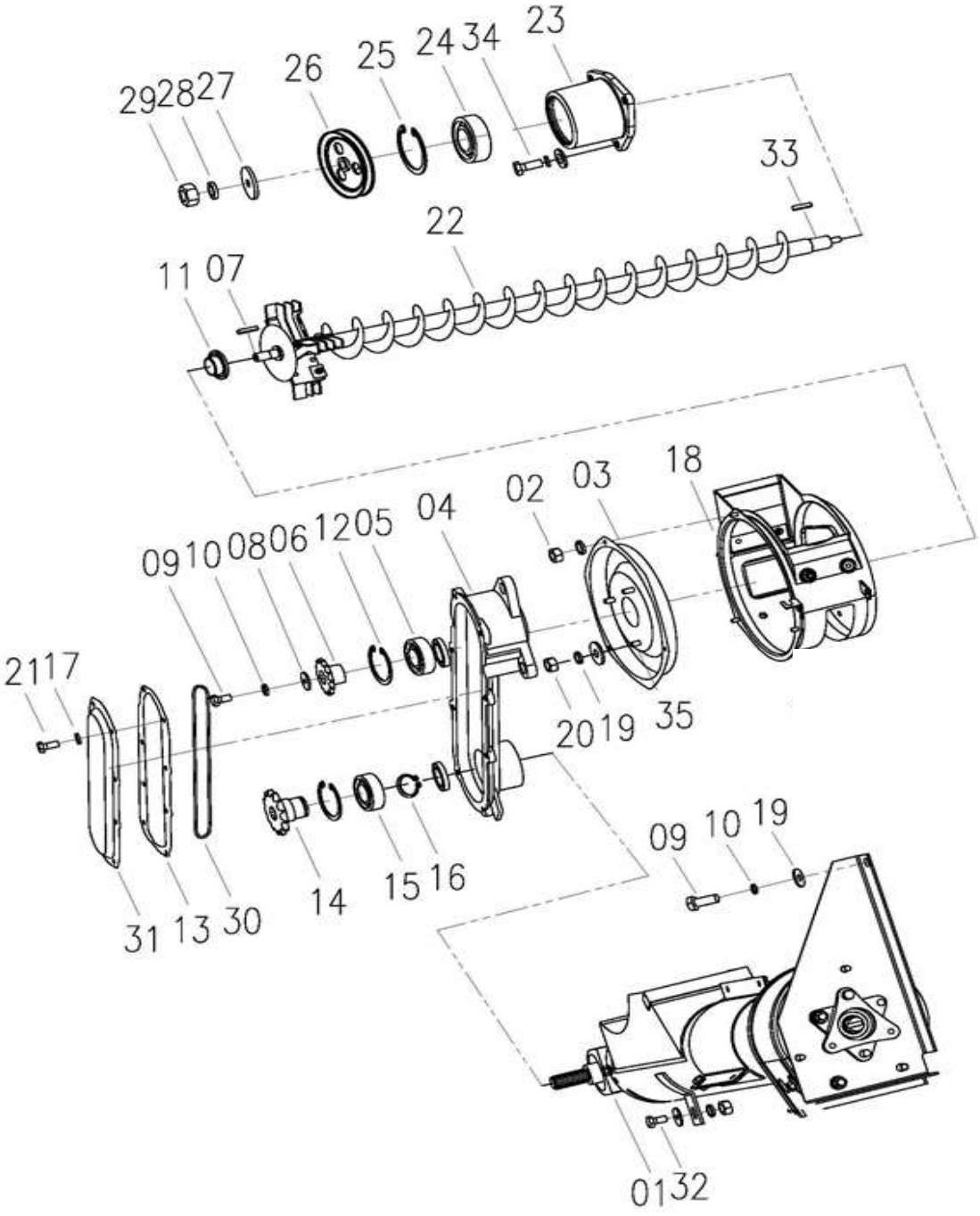

Impurity Assy W3.5H-02HB-11-00				
No.	**Description**	**Qty**	**Part Code**	**Remark**
01	Impurity Lifting Assy	1	W3.5H-02HB-11-01-00	
02	Nut M6	3	GB/T6170	
03	Cover Weld, Re-threshing	1	W2.0-02-11-03-06-00	
04	Chain Box	1	W2.0-02-11-14-00	
05	Bearing 6204-2RS	1	W2.5P-02-02-11-07	
06	14 Chain Wheel	1	W2.0-02-11-07	
07	Key A6×22	1	GB/T1096	
08	Retaining Ring for Shaft	1	W2.0-02-11-08	
09	Bolt M8×20	1	GB/T5783	10.9 Level
10	Washer 8	8	GB/T93	
11	Shaft Sleeve	1	W2.0-02-11-09	
12	Circlip for Hole 47	2	GB/T893.1	
13	Dust Proof Washer	1	W2.0-02-11-15	
14	13 Chain Wheel II	1	W2.0-02-11-10	
15	Bearing 6005-RS	1	W2.5-02-02-11-01-09-04	
16	Circlip for Shaft 25	1	GB894.1	
17	Washer 6	8	GB/T93	
18	Housing Assy, Re-threshing	1	W3.5H-02HB-11-03-00	
19	Washer 8	8	GB/T96-85	
20	Nut M8	5	GB/T6170-86	
21	Bolt M6×16	8	GB/5783-86	
22	Horizontal Auger Assy	1	W3.5H-02-11A-02-00	
23	Bearing Seat (II)	1	W2.5-02-02-11-04	
24	Bearing 6304-2RS	1	W2.5-02-02-10-16	Imported Bearing
25	Circlip for Hole 52	1	GB893.1-86	
26	Belt Pulley, Impurity	1	W2.5K-02HB-11-05	
27	Washer 12	1	GB/T96-85	
28	Washer 12	1	GB/T93-87	
29	Nut M12×1.25	1	GB/T6176-86	
30	Chain, Impurity Auger	1	W2.5-02-02-11-06	Roller Chain 415S-1-48
31	Cover, Chain Box	1	W2.0-02-11-13	
32	Bolt M8×25	1	GB/T5783-86	
33	Key A6×22	1	GB/T1096-79	
34	Bolt M8×20	8	GB/T5783	
35	Bolt M8×16	3	GB/T5783-86	

Impurity Lifting Assy W3.5H-02HB-11-01-00

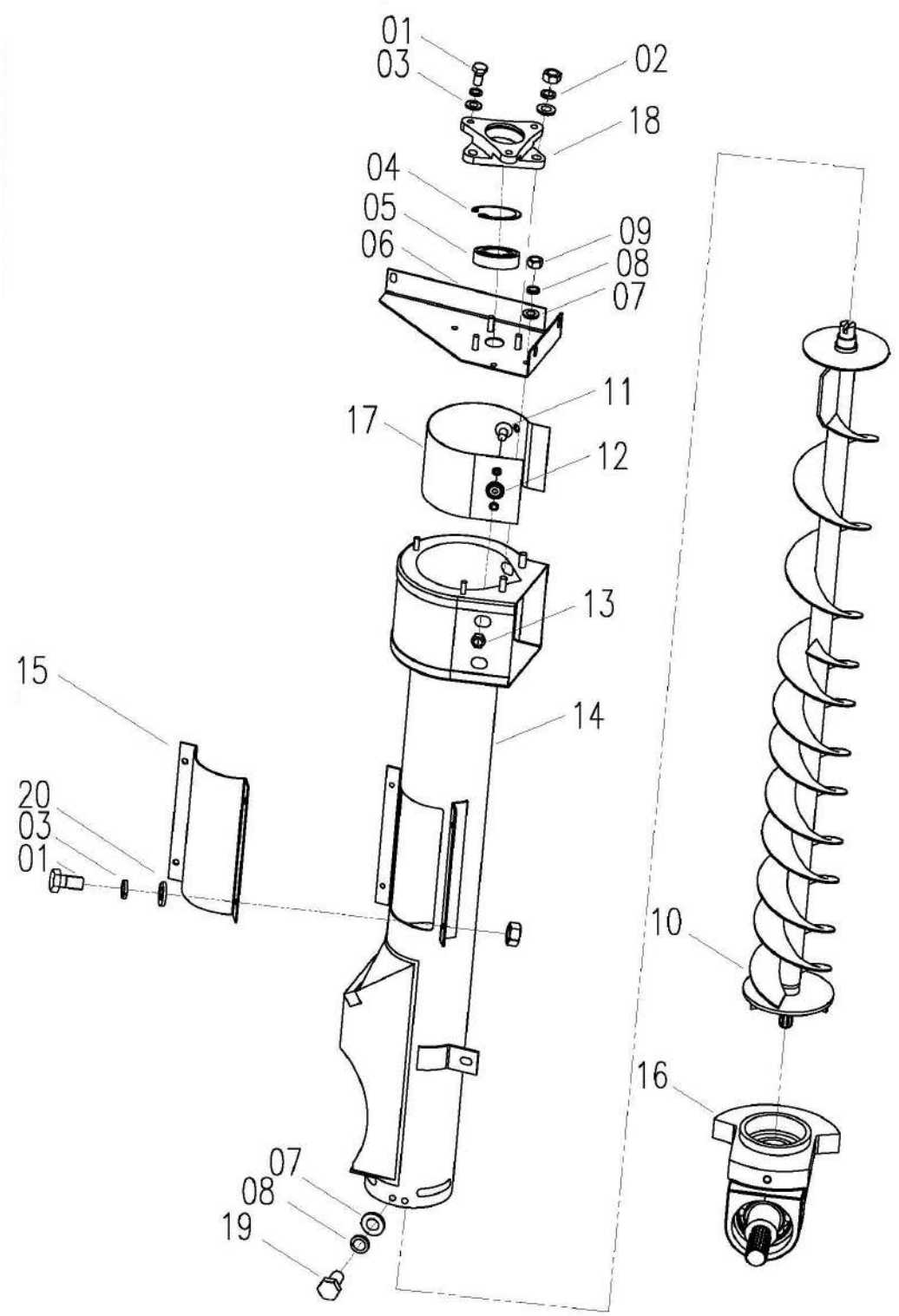

Impurity Lifting Assy W3.5H-02HB-11-01-00				
No.	**Description**	**Qty**	**Part Code**	**Remark**
01	Bolt M6×16	7	GB/T5783-86	
02	Washer 6	13	GB/T97.1-86	
03	Washer 6	9	GB/T93-87	
04	Circle 40	1	GB893.1-86	
05	Bearing 6203-2RS	1	W2.5-02-02-11-01-10	
06	2# Plate Weld, Vertical	1	W2.5-02-02-11-01-02-00	
07	Washer 8	8	GB/T97.1-85	
08	Washer 8	8	GB/T93-87	
09	Nut M8	5	GB/T6170-86	
10	Auger Weld, Impurity	1	W3.5H-02-11-01-07-00	
11	Screw M6*16	4	GB/T819-85	
12	Washer	4	W2.0-02-11-02-04	
13	Nut M6	10	GB/T6170	
14	Housing Weld, Impurity Lifting Auger	1	W3.5H-02HB-11B-01-01-00	
15	Cover Weld	1	W3.5H-02HB-11-01-02-00	
16	Impurity Gearbox	1	W2.5-02-02-11-01-09-00	
17	Plate (2)	1	W2.5-02-02-11-01-08	
18	Bearing Seat (#2 argue)	1	WD-150A-03A.05.10-03	
19	Bolt M8*16	3	GB/T5783-86	
20	Washer 6	4	GB/T96-85	

Horizontal Auger Assy W3.5H-02-11A-02-00

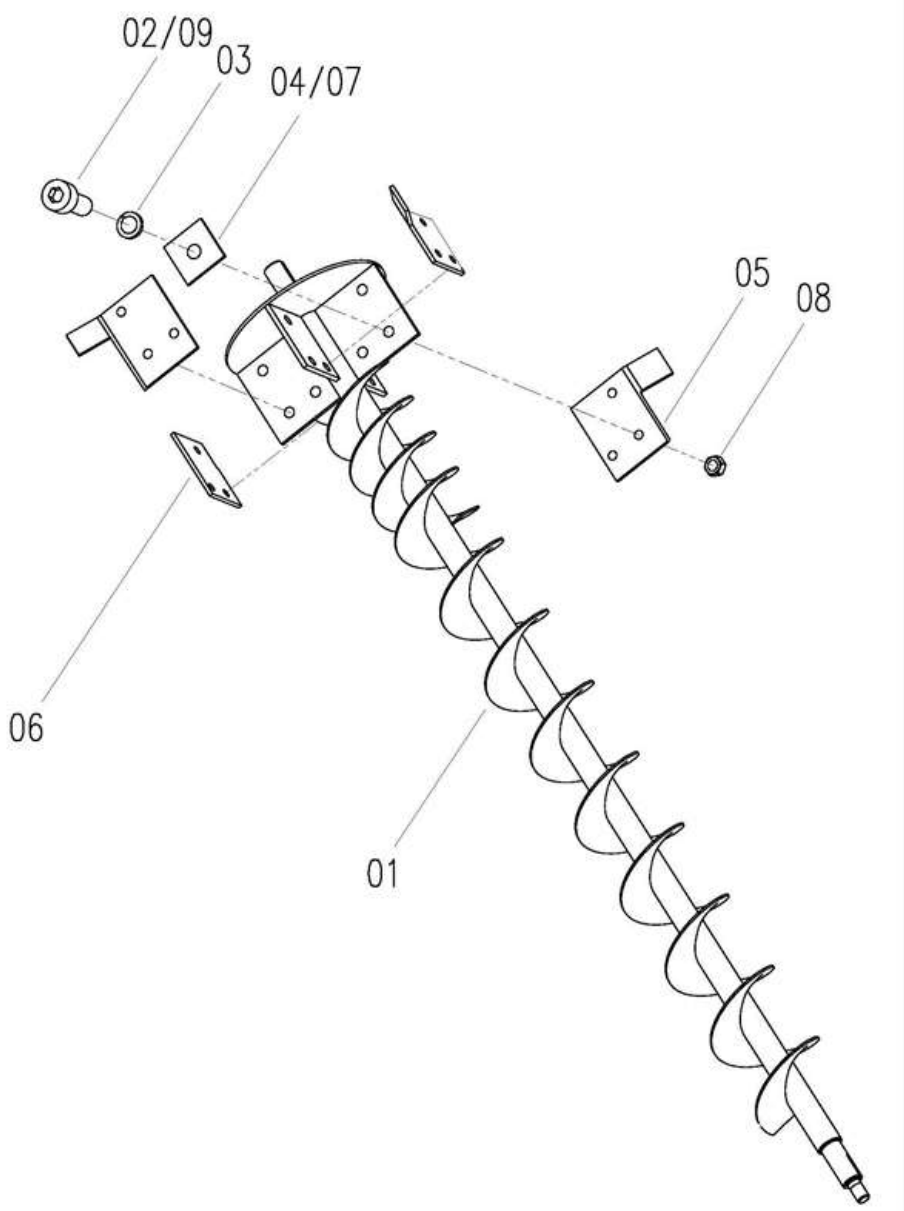

No.	Description	Qty	Part Code	Remark
01	Horizontal Auger Assy	1	W3.5H-02-11-02-01-00	
02	Bolt M8×20	12	GB/T70-85	12.9 Level
03	Cushion 8	12	GB/T93-87	
04	Balance Block	on demand	QT007-2009	
05	Plate I	2	W3.5H-02-11A-02-02	
06	Plate II	2	W3.5H-02-11A-02-03	
07	Balance Block	on demand	W2.5-02-56-07-20	
08	Bolt M8	12	GB/T6170	
09	Bolt M8×25	on demand	GB/T70-85	12.9 Level

Handle Assy W2.5C-02-01-09-00

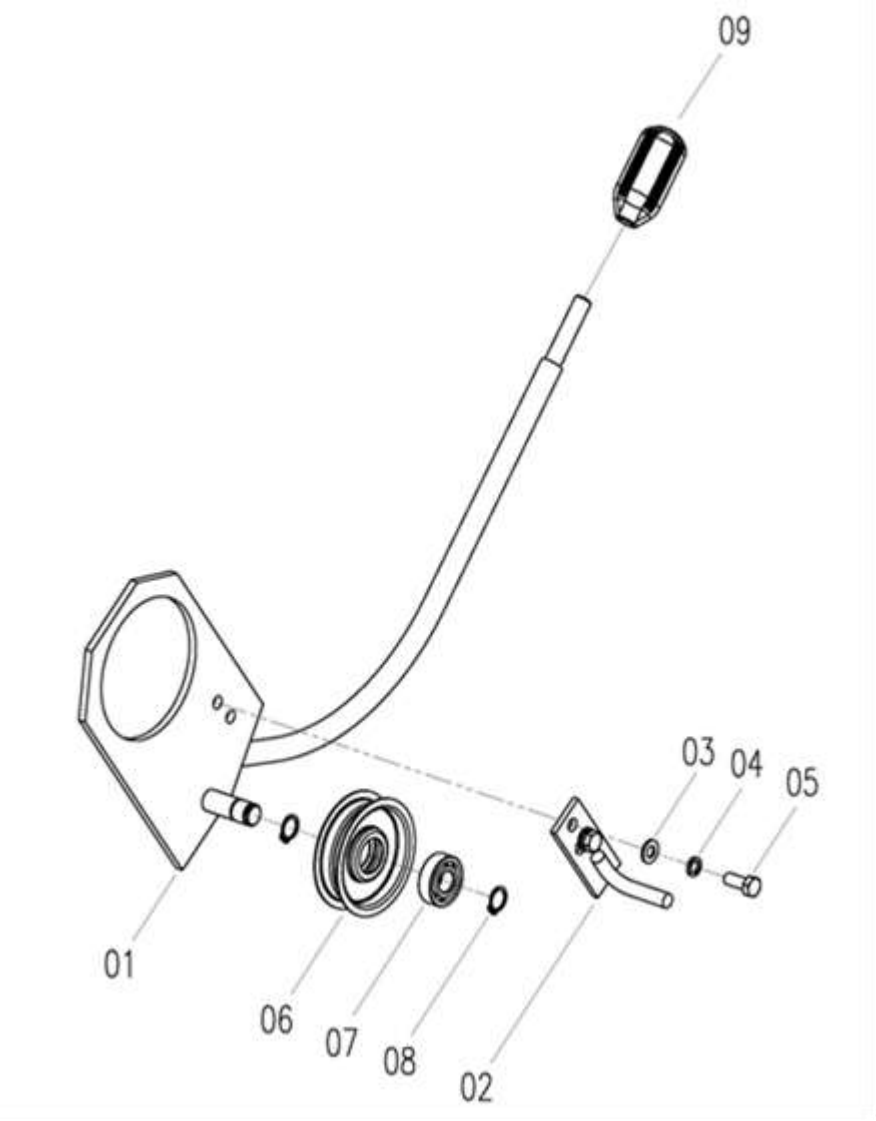

No.	Description	Qty	Part Code	Remark
01	Handle Weld	1	W2.5C-02-01-09-01-00	
02	Rod (2.Throttle Control)	1	W2.5C-02-01-09-03-00	
		1	W2.5-02-01-09-03A-00	National II engine
03	Retaining Ring 8	2	GB/T97.1-86	
04	Retaining Ring 8	2	GB/T93-86	
05	Bolt M8×20	2	GB/T5783-86	
06	Retaining Ring 15	2	GB/T894.1-86	
07	Roller	2	W2.5-02-01-09-02-01	W2.5-02-01-09-02-00 Tension wheel weld
08	Bearing 6202-2RS	1	GB/T276-82	
09	Handle Weld	1	W2.5DA-07E-05-01	

Impurity Gearbox Assy W2.5-02-02-11-01-09-00

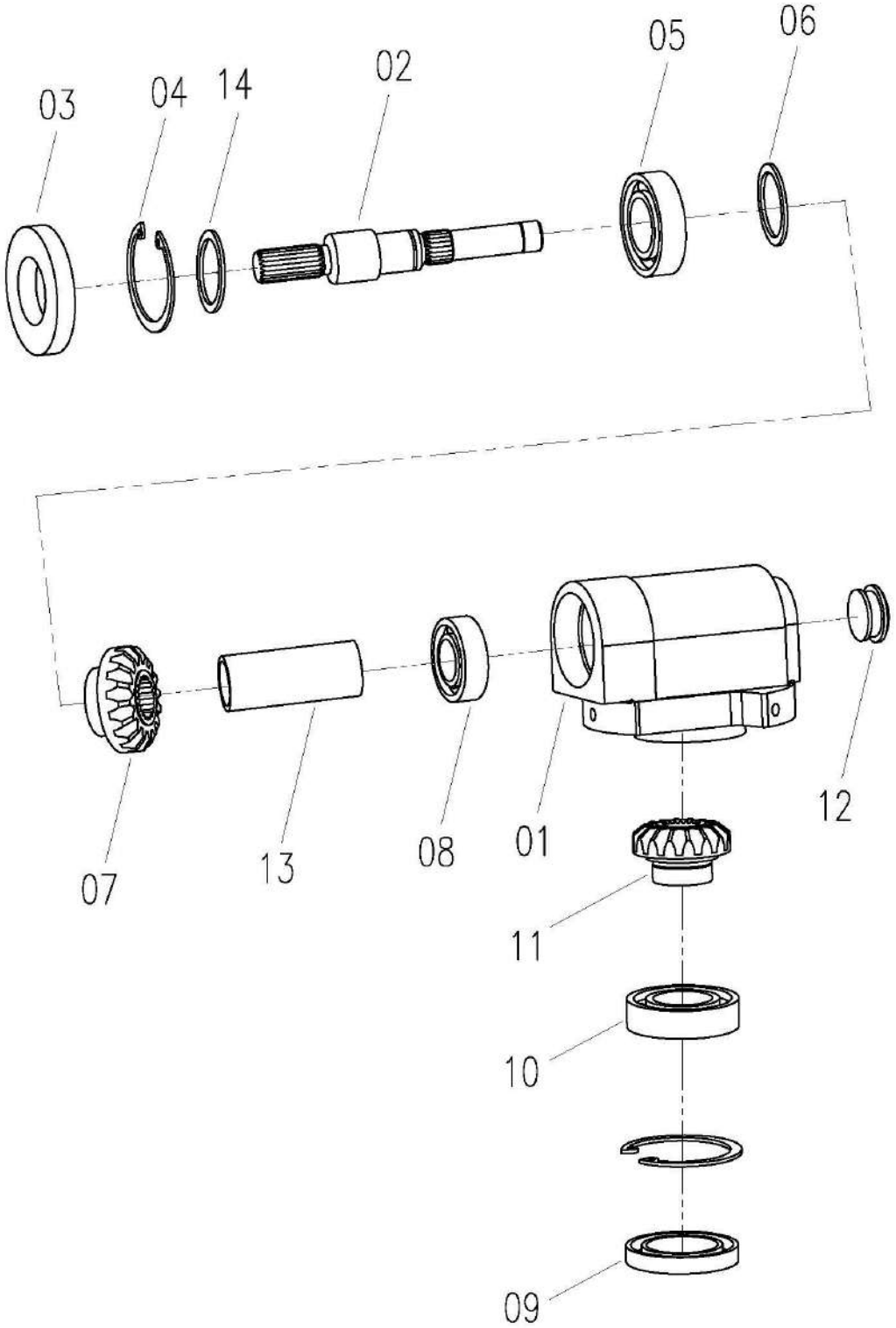

Impurity Gearbox Assy W2.5-02-02-11-01-09-00				
No.	**Description**	**Qty**	**Part Code**	**Remark**
01	Housing, Impurity Gearbox	1	WD-150A-03.05.10.01-01A	
02	Input Shaft	1	WD-150A-03A.05.10.01-01	
03	Seal Ring 25×47×7	1	GB/T13871-92	
04	Retaining Ring 47	2	GB/T893.1-86	
05	Bearing 6204-RS	1	W2.5-02-02-11-01-09-02	
06	Retaining Ring 20	1	GB/T894.1-86	
07	Bevel Gear	1	WD-150-03.05.10.01-03	
08	Bearing 6002-RS	1	W2.5-02-02-11-01-09-03	
09	Seal Ring 30×47×7	1	GB/T13871-92	
10	Bearing 6005-2RS	1	W2.5-02-02-11-01-09-04	
11	Bevel Gear	1	WD-150-03.05.10.01-04	
12	Plug	1	WD-150-03.05.10.01-05	
13	Sleeve	1	WD-150A-03A.05.10.01-02	
14	Washer, Adjusting	1	W2.5-02-02-11-01-09-05	

Vibration Sieve Assy W3.5H-02HA-13-00

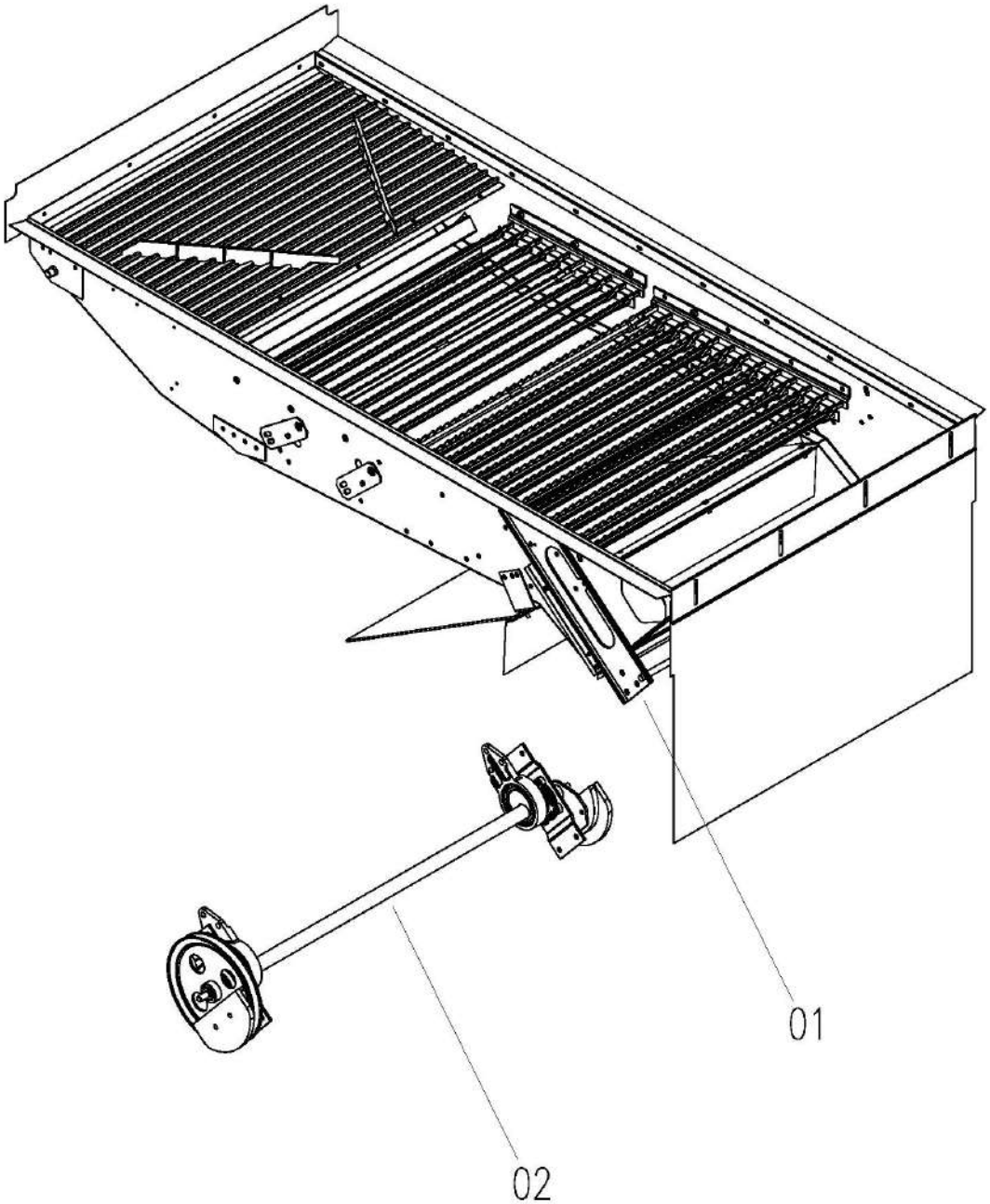

Vibration Sieve Assy W3.5H-02HA-13-00				
No.	**Description**	**Qty**	**Part Code**	**Remark**
01	Vibration Sieve Assy	1	W3.5H-02HA-13-01-00	
02	Driving Assy, Vibration Sieve	1	W2.5K-02HB-13-02-00	

Vibration Sieve Assy W3.5H-02HA-13-01-00

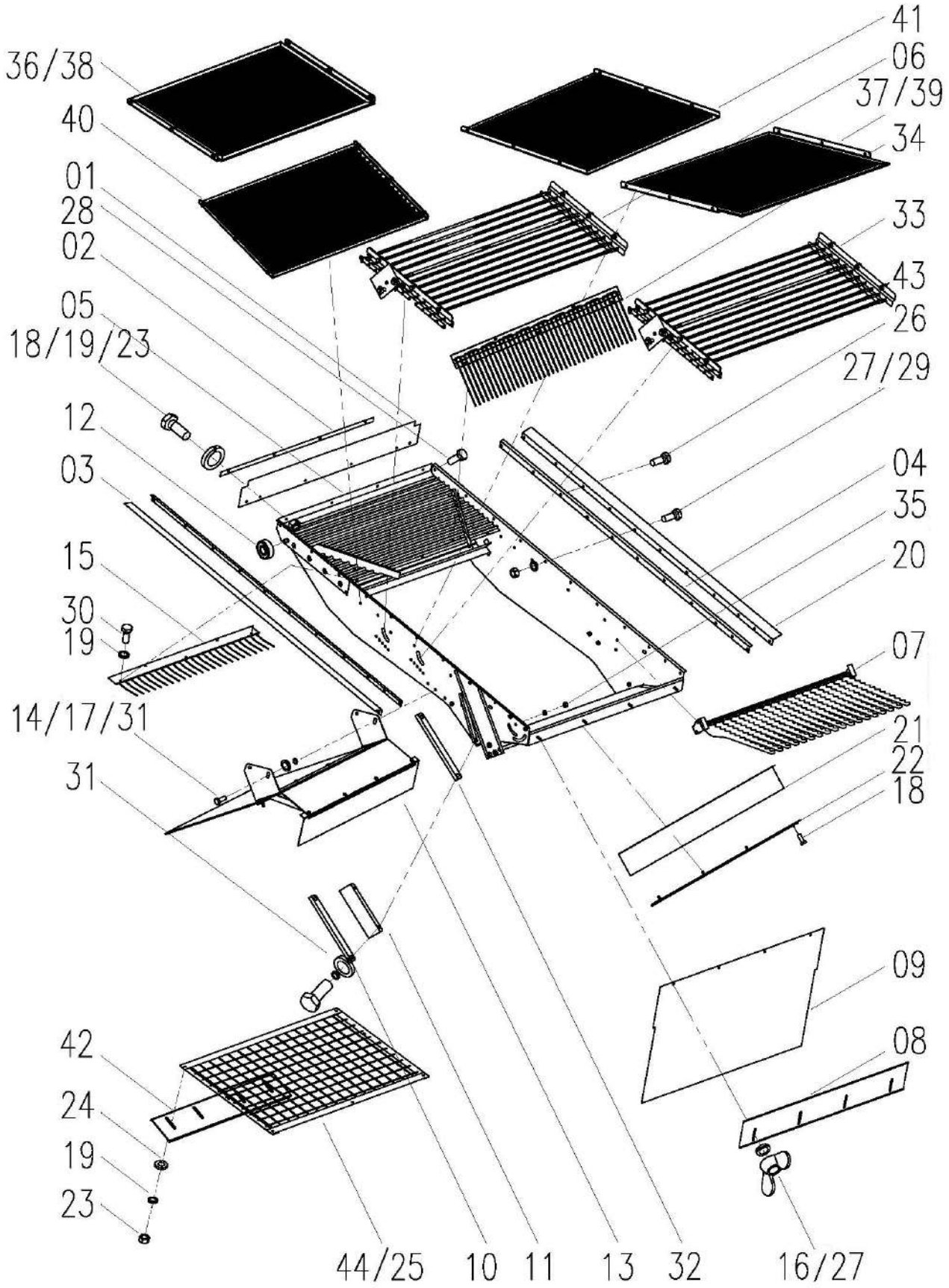

Vibration Sieve Assy W3.5H-02HA-13-01-00				
No.	**Description**	**Qty**	**Part Code**	**Remark**
01	Canvas, Sieve Box, Front	1	W2.5-02-02-13-01-04	
02	Press Plate	1	W2.5-02-02-13-01-05	
03	Press Plate, Left	1	W2.5K-02HG-13-01-06	
04	Canvas, Sieve Box, 1	2	W2.5K-02HG-13-01-07	
05	Sieve Box Weld	1	W3.5H-02HA-13-01-01-00	
06	Sieve Assy, Upper A	1	W3.5H-02HA-13-01-02-00	
07	Sieve Assy, Rear	1	W2.5K-02H-13-01-03A-00	
08	Baffle Plate, Rear	1	W2.5-02-02-13-01-09	
09	Canvas	1	W3.5-02HX-13-01-38	
10	Press Plate	2	W2.5K-02HX-13-01-01-12	
11	Canvas, Sieve Box, 2	2	W2.5K-02HG-13-01-11	
12	Bearing 6301-2rs	2	W2.5-02G-02-13-01-24	
13	Separating Plate, Lower	1	W3.5H-02HA-13-01-12-00	
14	Cushion 8	16	GB/T93	
15	Sieve, Rear	1	W2.5-02G-02-13B-01-21-00	
16	Nut M6	4	GB/T62	
17	Bolt M8x20	15	GB/T5783	
18	Bolt M6x16	8	GB/T5783	
19	Cushion 6	48	GB/T93-87	
20	Press Plate, Right	1	W2.5K-02HG-13-01-19	
21	Canvas, Sieve Box, 2	1	W2.5-02G-02-13-01-20	
22	Press Plate	1	W2.5K-02HG-13-01-22	
23	Nut M6	35	GB/T6170	
24	Washer	10	W2.5P-02-02-10-05-03	
25	Net Combination (10)	1	W3.5H-02HA-13-01-52-00	
26	Bolt M6×20	4	GB/T5783	
27	Washer, Big 6	24	GB/T96	
28	Bolt M6×25	2	GB/T5783	
29	Bolt M6×18	18	GB/T5783	
30	Bolt M6×12	5	GB/T5783	
31	Washer, Plain 8	11	GB/T97.1	
32	Press Plate, Right	1	W2.5K-02HX-13-01-01-22	
33	Sieve Assy, Upper B	1	W3.5H-02HA-13-01-10-00	
34	Sieve Weld, Rear	1	W2.5K-02HG-13-01-41-00	
35	Nut M8	2	GB/T6170	
36	Sieve Assy, Upper 13	1	W3.5H-02HA-13-01-45-00	
37	Sieve Weld, Upper 13	1	W3.5H-02HA-13-01-46-01-00	
38	Sieve Assy, Upper 16	1	W3.5H-02HA-13-01-47-00	

Vibration Sieve Assy W3.5H-02HA-13- 01-00

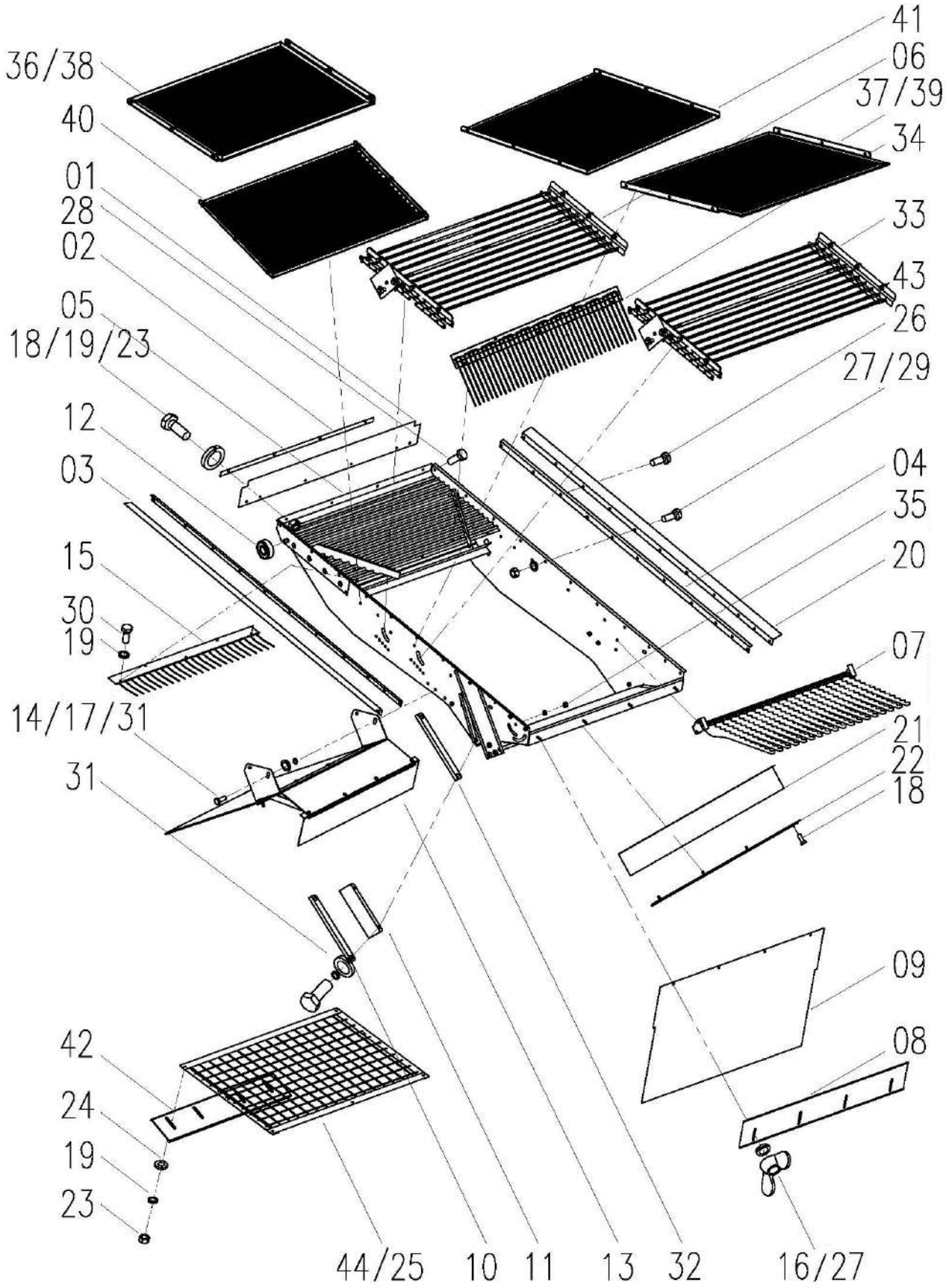

Vibration Sieve Assy W3.5H-02HA-13-01-00				
No.	**Description**	**Qty**	**Part Code**	**Remark**
39	Sieve Weld, Upper 16	1	W3.5H-02HA-13-01-48-01-00	
40	Punch Sieve Assy,Upper 13	1	W3.5H-02HA-13-01-49-00	
41	Punch Sieve Assy,Upper 13	1	W3.5H-02HA-13-01-50	
42	Plate	1	W2.5-02-02-13-01-15	
43	Bolt M8*25	2	GB/T5783	
44	Sieve Assy 16	1	W2.5K-02HX-13-01-40A-00	

Upper Sieve Assy A W3.5H-02HA-13-01-02-00

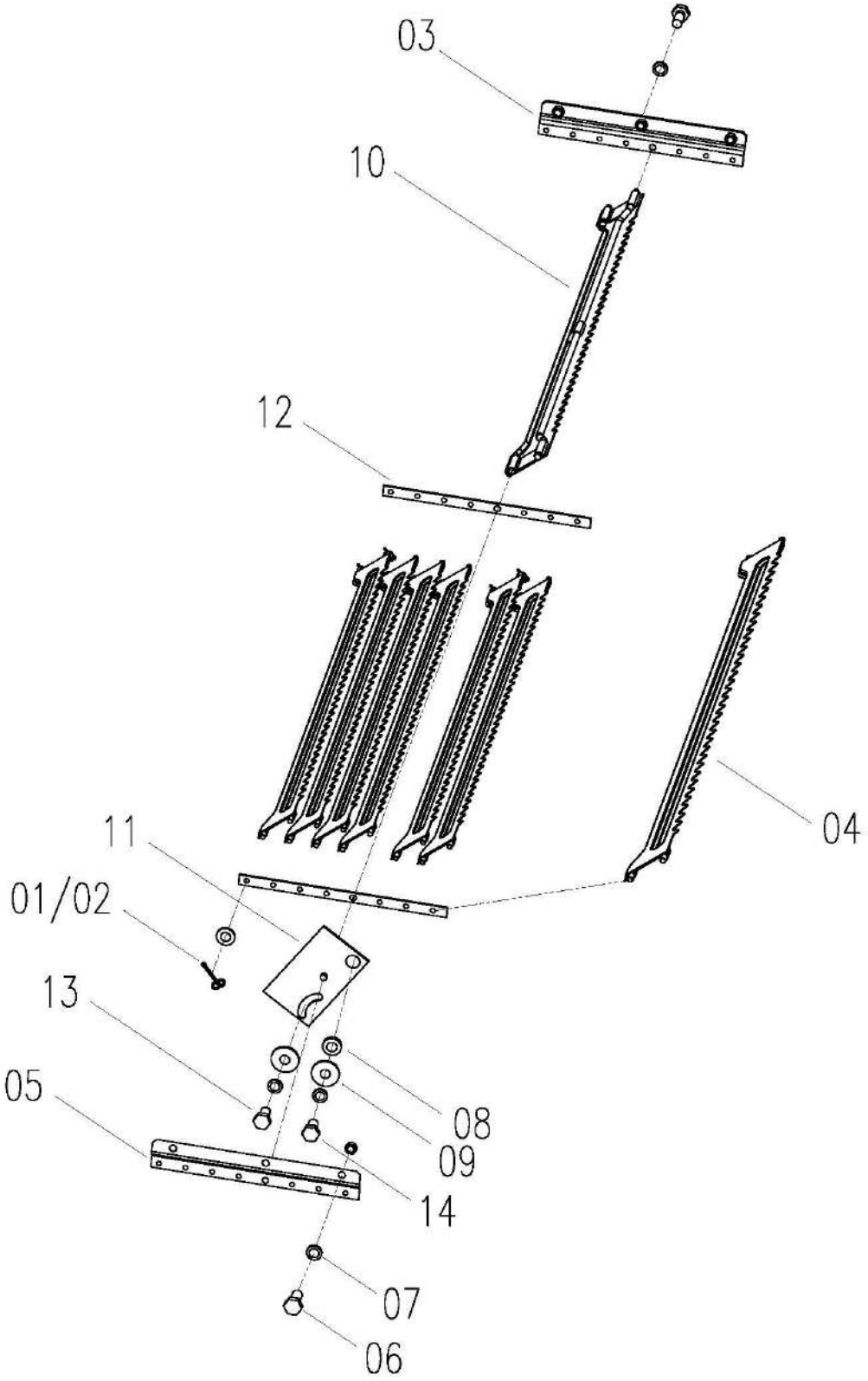

Upper Sieve Assy A W3.5H-02HA-13-01-02-00

No.	Description	Qty	Part Code	Remark
01	Washer 6	36	GB/T97.1-85	
02	Pin 1.6×16	36	GB/T1220-84	
03	Connecting Plate	1	W3.5H-02HA-13-01-02-01	
4	Sieve Plate (1)	9	W2.5-02-02-13-01-02-02-00	
05	Connecting Plate B	1	W3.5H-02HA-13-01-02-02	
06	Bolt M8×18	6	GB/T5783-86	
07	Washer 8	8	GB/T93-87	
08	Plate	1	W2.5-02-02-13-01-02-07	
09	Washer 8	2	GB/T96-85	
10	Sieve Plate (2)	1	W2.5-02-02-13-01-02-04-00	
11	Plate Weld, Adjusting	1	W5.0-02X-13-01-15-07-00	
12	Plate	2	W3.5H-02HA-13-01-02-03	
13	Bolt M8×16	1	GB/T5783-86	
14	Bolt M8×14	1	GB/T5783-86	

Upper Sieve Assy B W3.5H-02HA-13-01-10-00

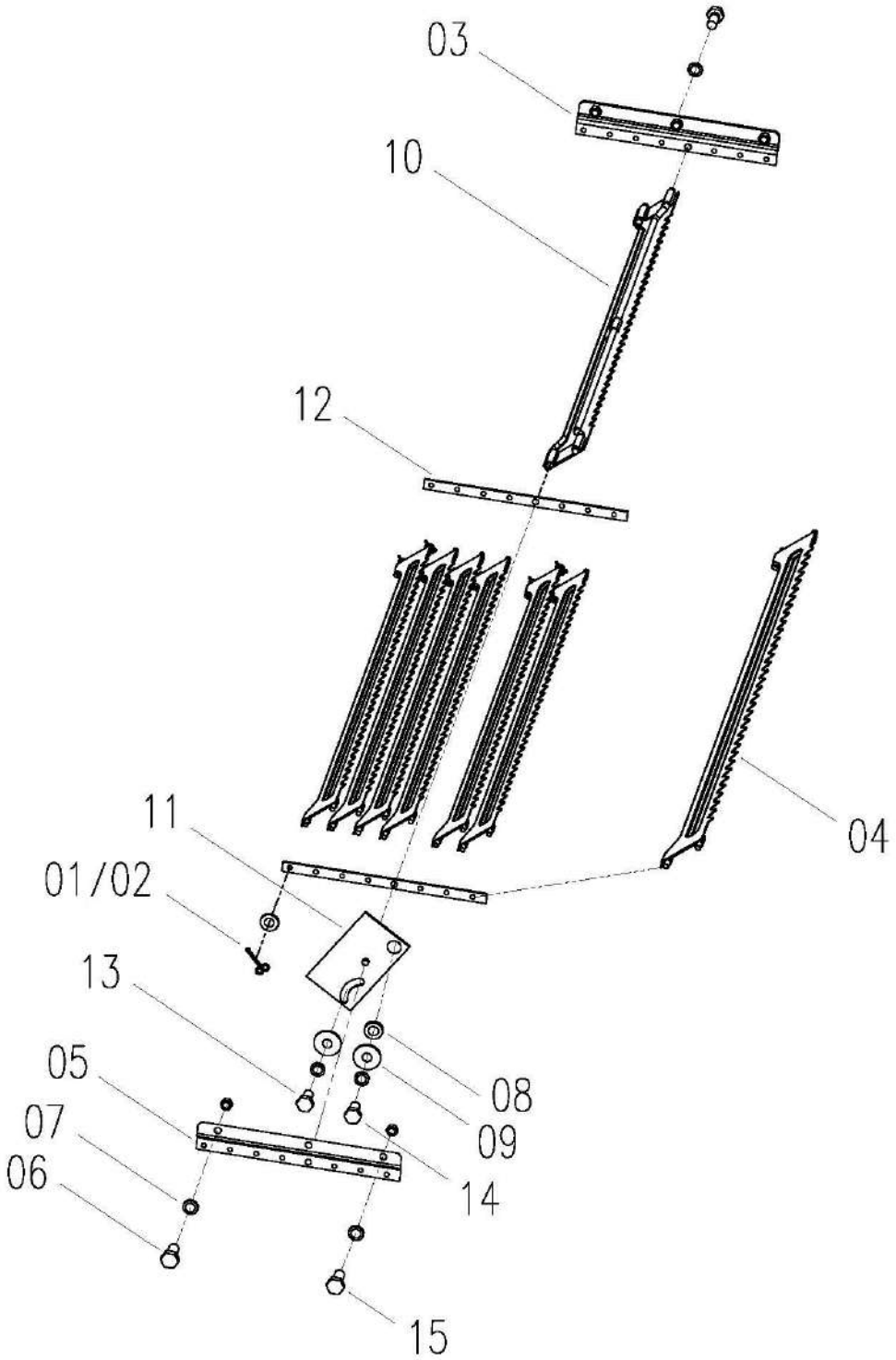

Upper Sieve Assy B W3.5H-02HA-13-01-10-00				
No.	**Description**	**Qty**	**Part Code**	**Remark**
01	Washer 6	52	GB/T97.1-85	
02	Pin 1.6×16	52	GB/T1220-84	
03	Connecting Plate A	1	W3.5H-02HA-13-01-10-01	
04	Sieve Plate (1)	13	W2.5-02-02-13-01-02-02-00	
05	Connecting Plate B	1	W3.5H-02HA-13-01-10-02	
06	Bolt M8×18	4	GB/T5783-86	
07	Washer 8	8	GB/T93-87	
08	Plate	1	W2.5-02-02-13-01-02-07	
09	Washer 8	2	GB/T96-85	
10	Sieve Plate (2)	1	W2.5-02-02-13-01-02-04-00	
11	Adjusting Plate Weld	1	W5.0-02X-13-01-15-07-00	
12	Plate	2	W3.5H-02HA-13-01-10-03	
13	Bolt M8×16	1	GB/T5783-86	
14	Bolt M8×14	1	GB/T5783-86	
15	Bolt M8×25	2	GB/T5783-86	

Rear Sieve Assy W2.5K-02H-13-01-03A-00

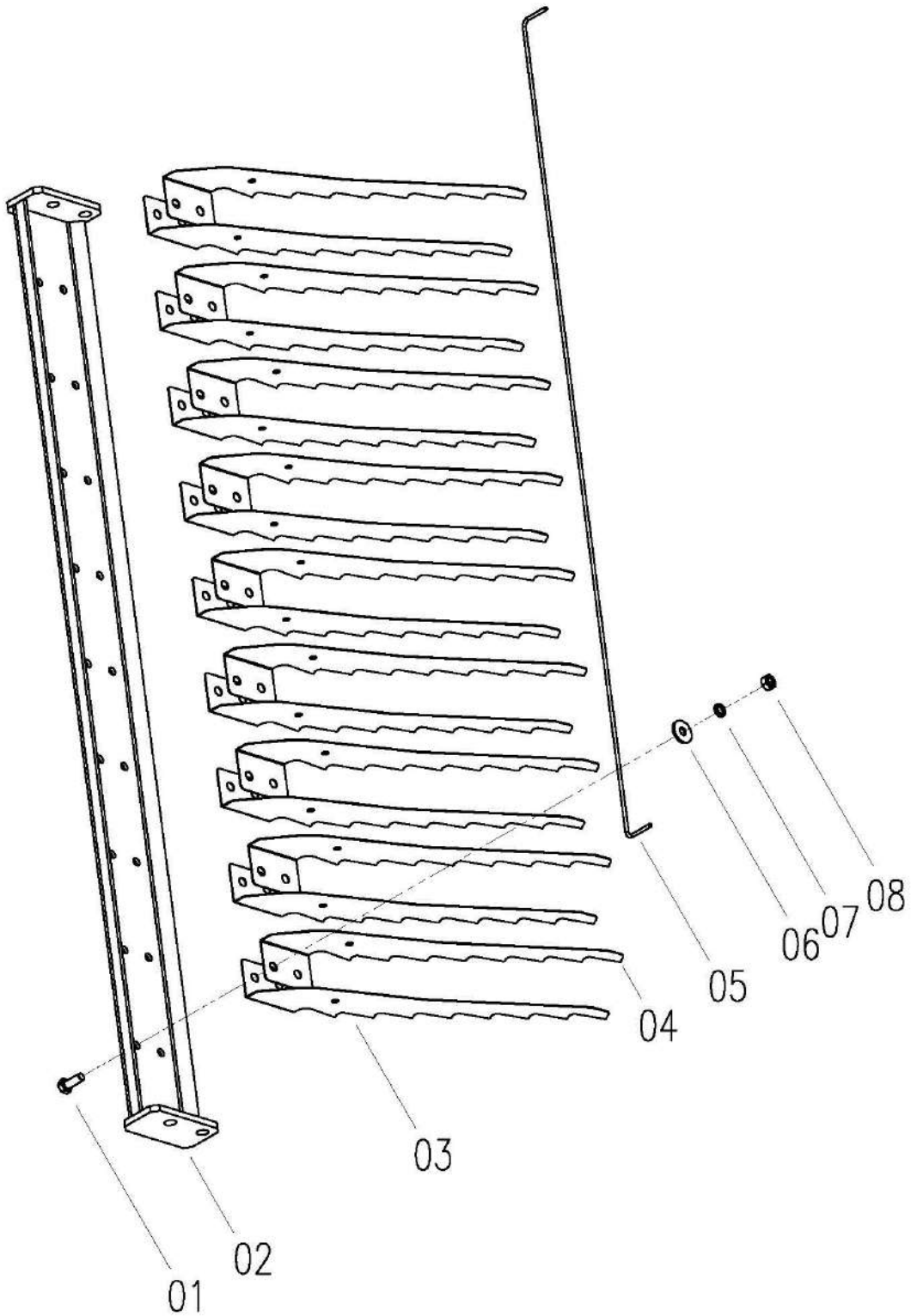

Rear Sieve Assy W2.5K-02H-13-01-03A-00				
No.	**Description**	**Qty**	**Part Code**	**Remark**
01	Bolt M6x16	18	GB/T5783-86	
02	Sieve Seat Weld	1	W3.5-02XA-13-01-25A-01-00	
03	Sieve, Left	9	W2.5K-02H-13-01-03A-02	
04	Sieve, Right	9	W2.5K-02H-13-01-03A-03	
05	Steel Wire	1	W2.5-02-02-13-01-03-03	
06	Washer, Big 6	18	GB/T96-85	
07	Washer 6	18	GB/T93-87	
08	Nut M6	18	GB/T6170-86	

Lower Separation Plate Combination W3.5H-02HA-13-01-12-00

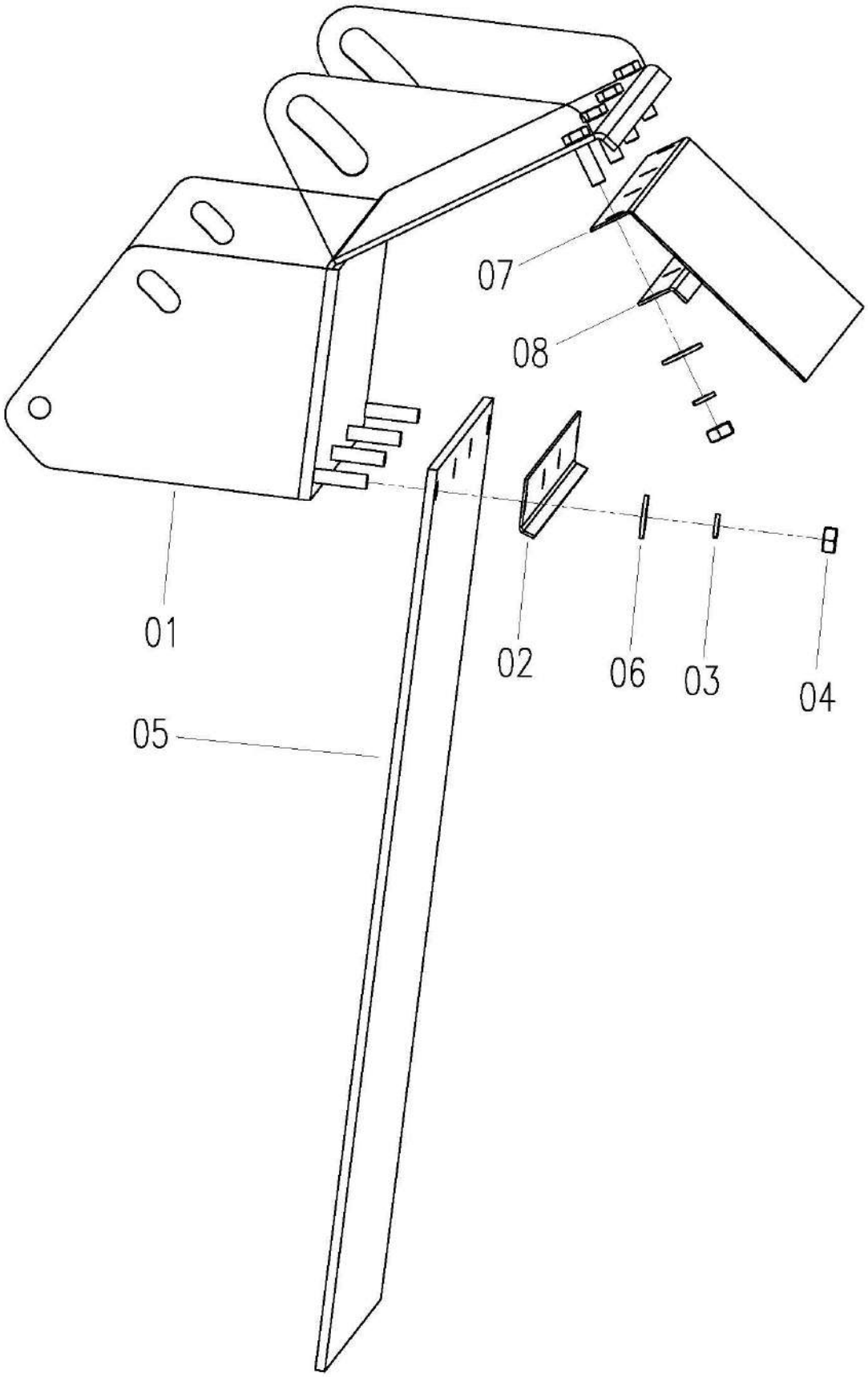

Lower Separation Plate Combination W3.5H-02HA-13-01-12-00

No.	Description	Qty	Part Code	Remark
01	Connecting Plate Weld, Lower	1	W3.5H-02HA-13-01-12-02-00	
02	Press Plate	1	W2.5-02-02-13-01-12-02	
03	Cushion 6	8	GB/T93	
04	Nut M6	8	GB/T6170	
05	Canvas (1)	1	W3.5H-02HA-13-01-12-05	
06	Washer, Big 6	8	GB/T96	
07	Fiberboard	1	W2.5-02-02-13-01-12-04	
08	Press Plate	1	W3.5H-02HA-13-01-12-04	

Net Combination (10) W3.5H-02HA-13-01-52-00

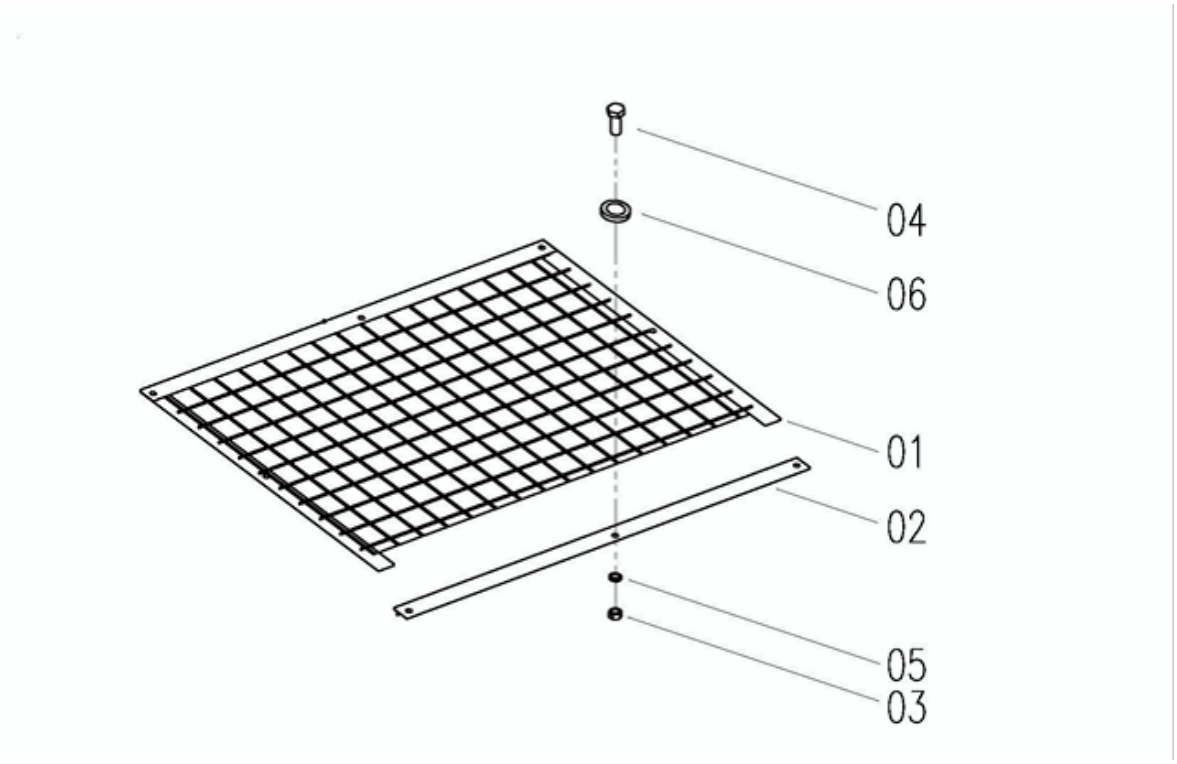

No.	Description	Qty	Part Code	Remark
01	Net Weld (10)	1	W3.5H-02HA-13-01-52-01-00	
02	Press Plate	1	W2.5K-02H-13-01-40A-02	
03	Nut M8	2	GB/T6170	
04	Bolt M8x25	2	GB/T5783	
05	Cushion 8	2	GB/T93	
06	Gasket	2	W2.5K-02H-13-01-40A-03	

Net Combination (16) W2.5K-02HX-13-01-40A-00

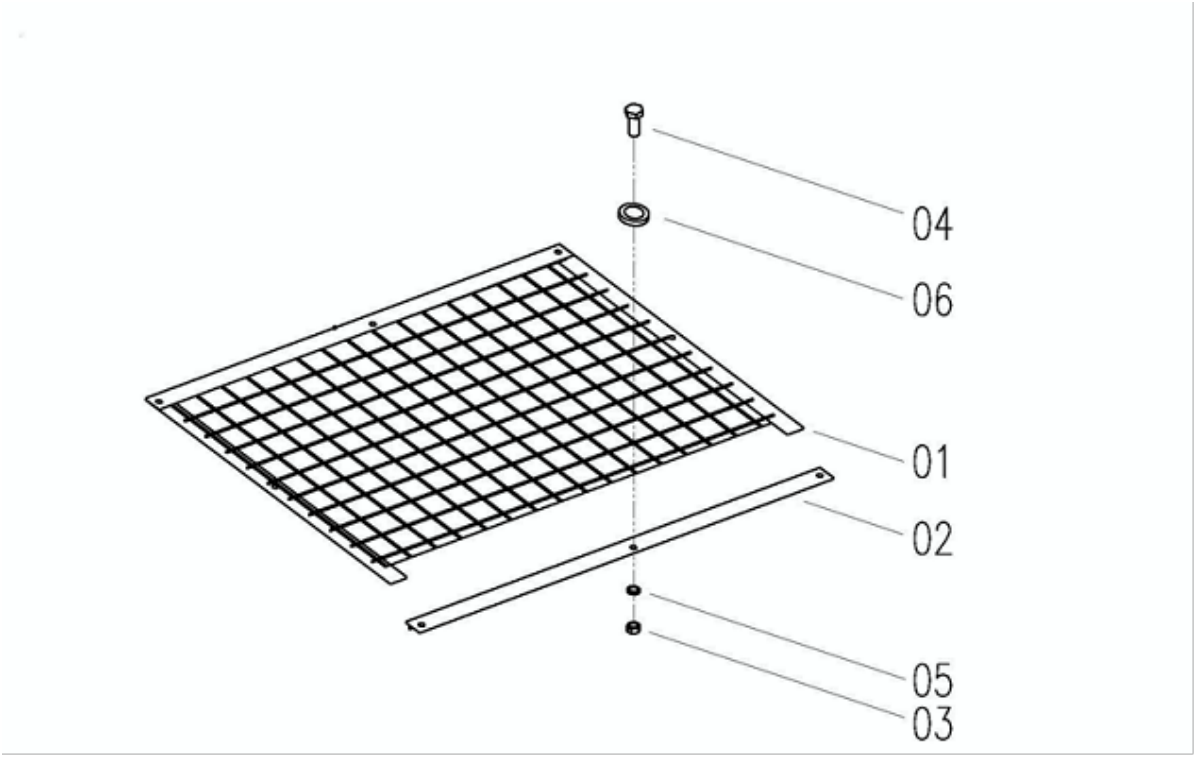

No.	Description	Qty	Part Code	Remark
01	Net Weld (16)	1	W2.5K-02HX-13-01-40A-01-00	
02	Press Plate	1	W2.5K-02H-13-01-40A-02	
03	Nut M8	2	GB/T6170	
04	Bolt M8x25	2	GB/T5783	
05	Cushion 8	2	GB/T93	
06	Gasket	2	W2.5K-02H-13-01-40A-03	

Sieve Assy, Upper 13 W3.5H-02HA-13-01-45-00

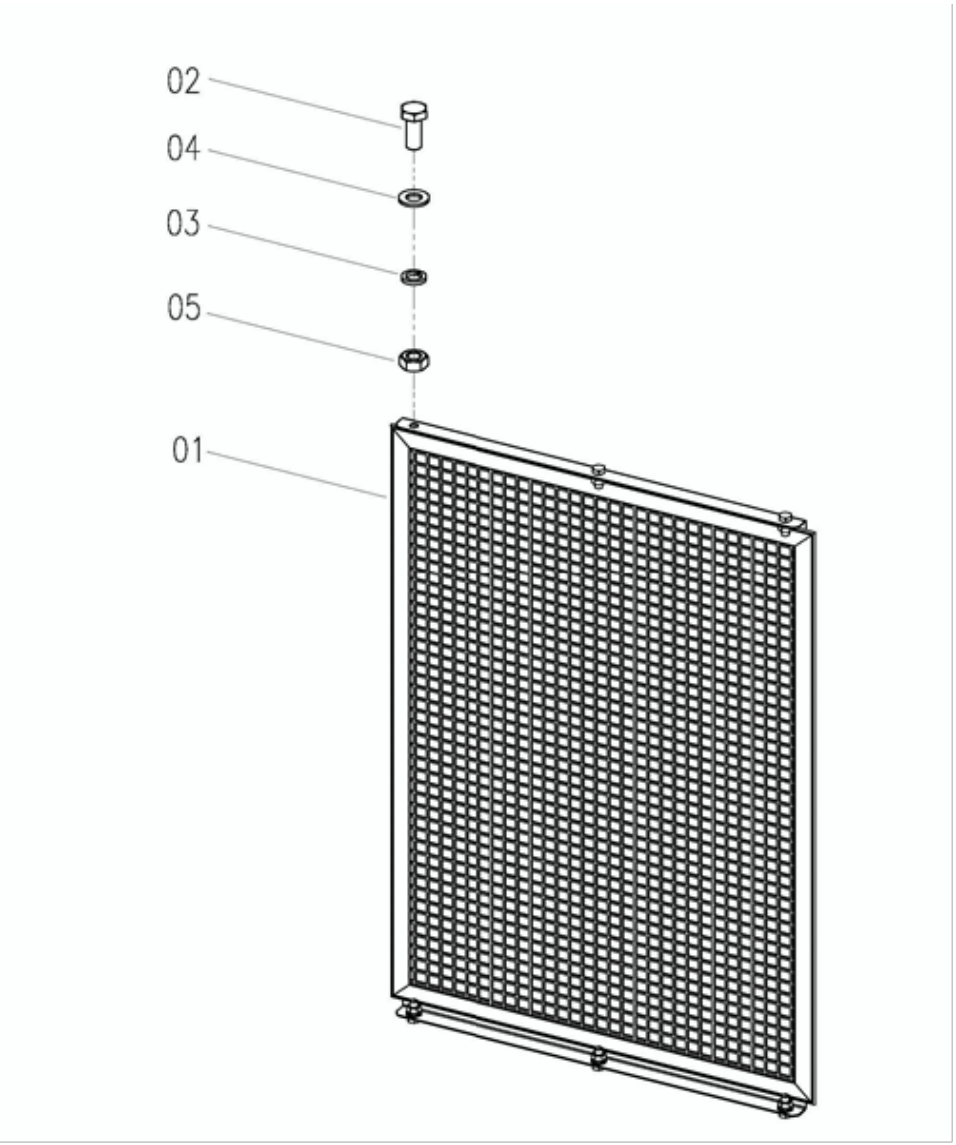

No.	Description	Qty	Part Code	Remark
01	Sieve Assy, Upper 13	1	W3.5H-02HA-13-01-45-01-00	
02	Bolt M8x20	6	GB/T5783	
03	Cushion 8	6	GB/T93	
04	Gasket	6	GB/T97.1	
05	Nut M8	6	GB/T6170	

Sieve Assy, Upper 16 W3.5H-02HA-13-01-47-00

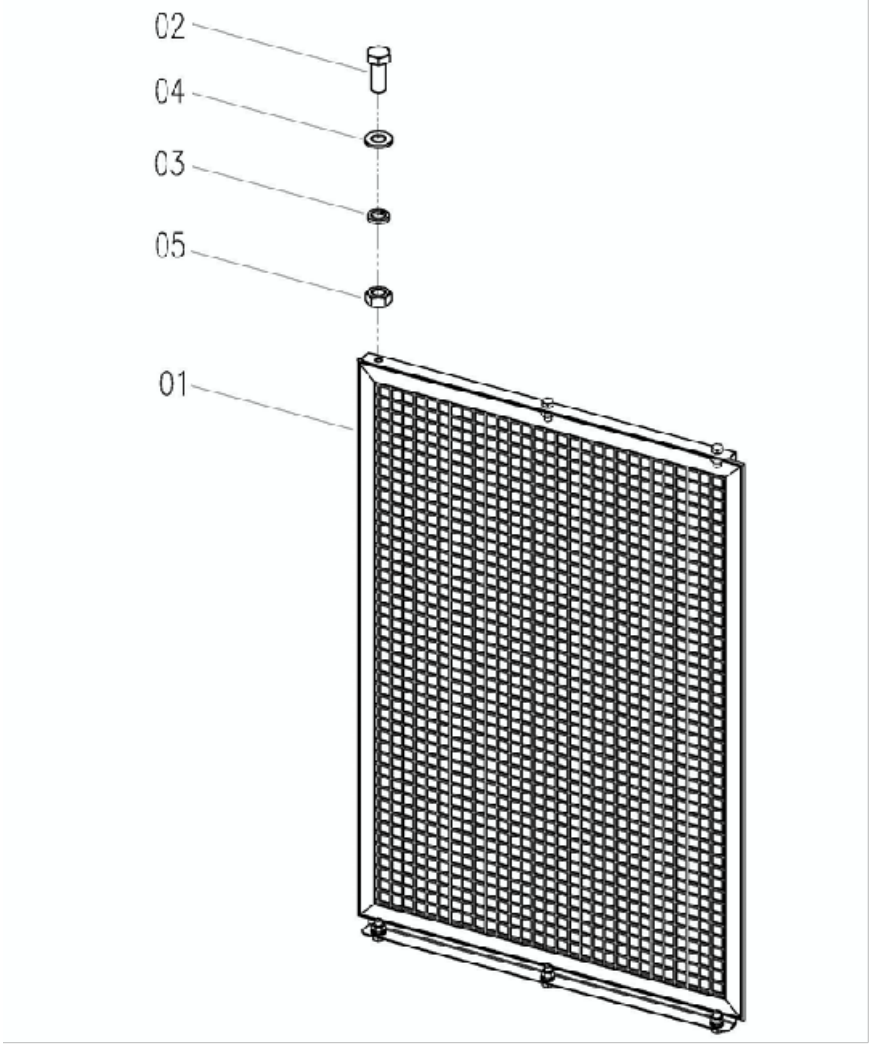

No.	Description	Qty	Part Code	Remark
01	Sieve Assy, Upper 16	1	W3.5H-02HA-13-01-47-01-00	
02	Bolt M8x20	6	GB/T5783	
03	Cushion 8	6	GB/T93	
04	Gasket	6	GB/T97.1	
05	Nut M8	6	GB/T6170	

Punch Sieve Assy, Upper 16 W3.5H-02HA-13-01-49-00

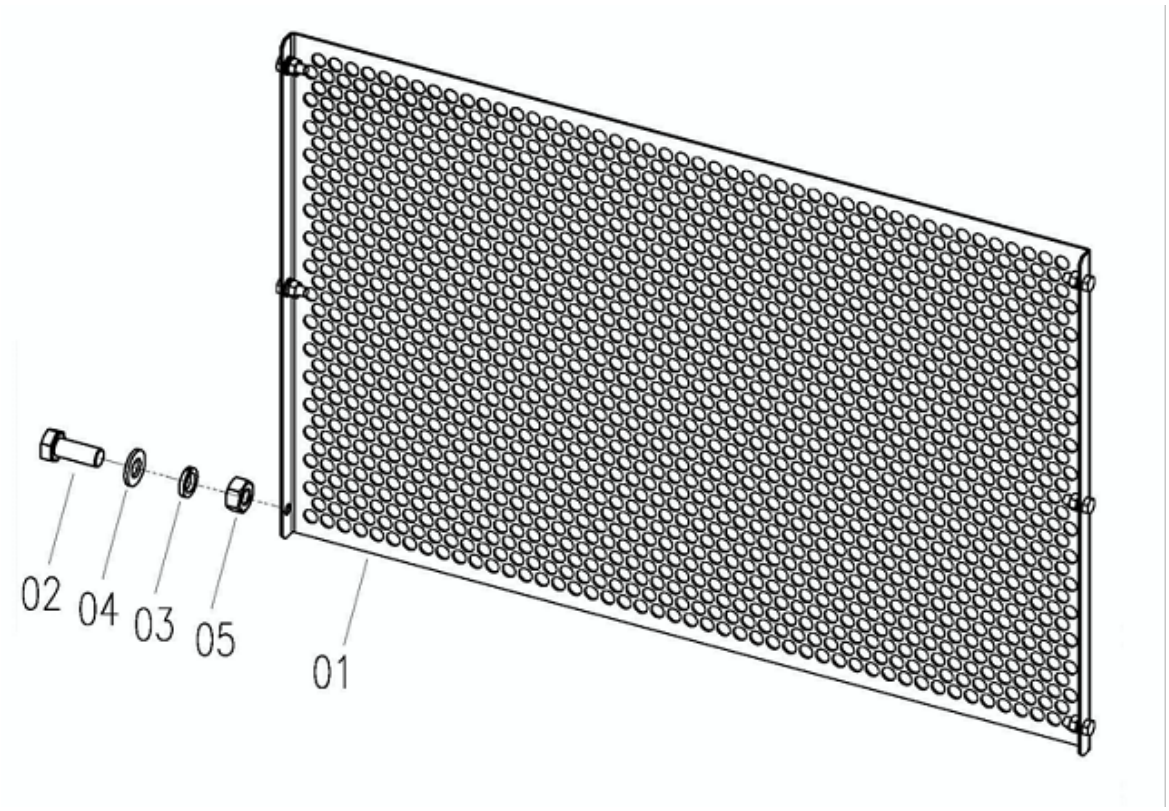

No.	Description	Qty	Part Code	Remark
01	Punch Sieve Assy, Upper 13	1	W3.5H-02HA-13-01-49-01-00	
02	Bolt M8x20	6	GB/T5783	
03	Cushion 8	6	GB/T93	
04	Gasket	6	GB/T97.1	
05	Nut M8	6	GB/T6170	

Grain Tension Pulley Combination W3.5H-02HA-10-05-00

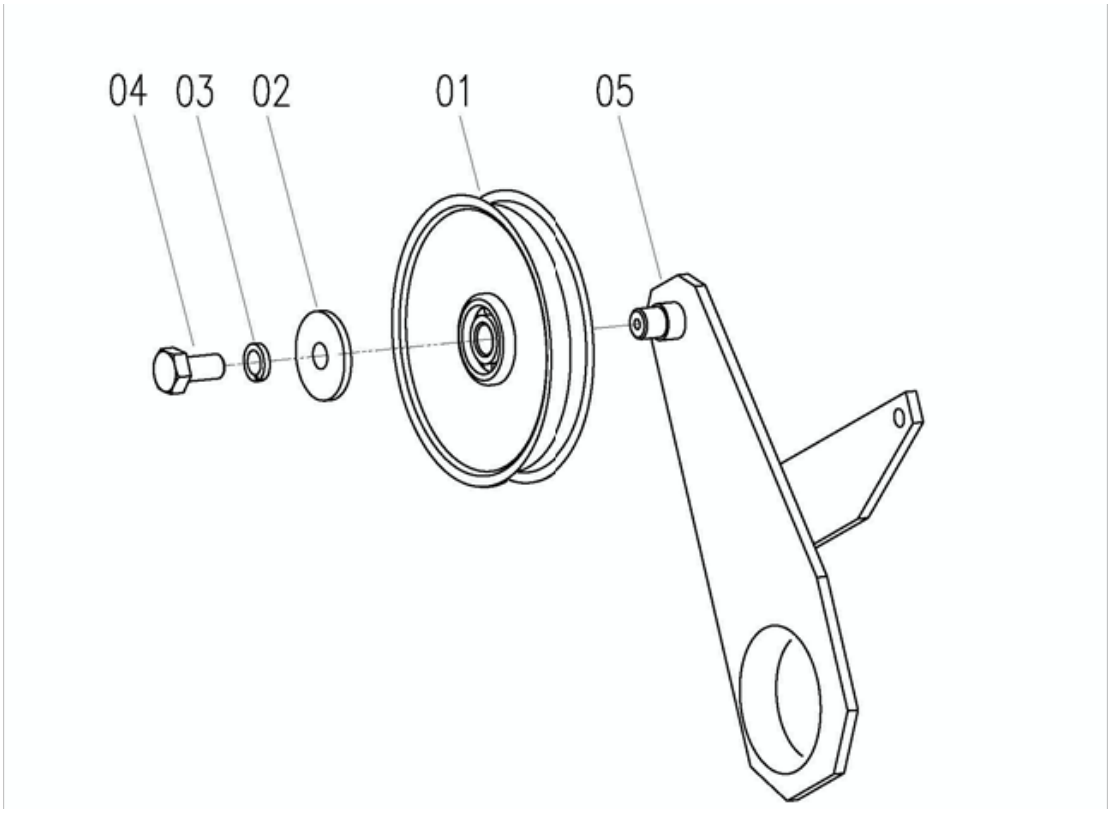

No.	Description	Qty	Part Code	Remark
01	Tension Pulley Combination	1	W2.5K-02HB-56-28A-01-00	
02	Washer	1	W2.5P-02-02-10-05-03	
03	Washer 6	1	GB/T93-87	
04	Bolt M6x12	1	GB/T5783-86	
05	Tension Am Weld	1	W2.5K-02HB-10-05-01-00	

Vibrating Sieve Driving Assy W2.5K-02HB-13-02-00

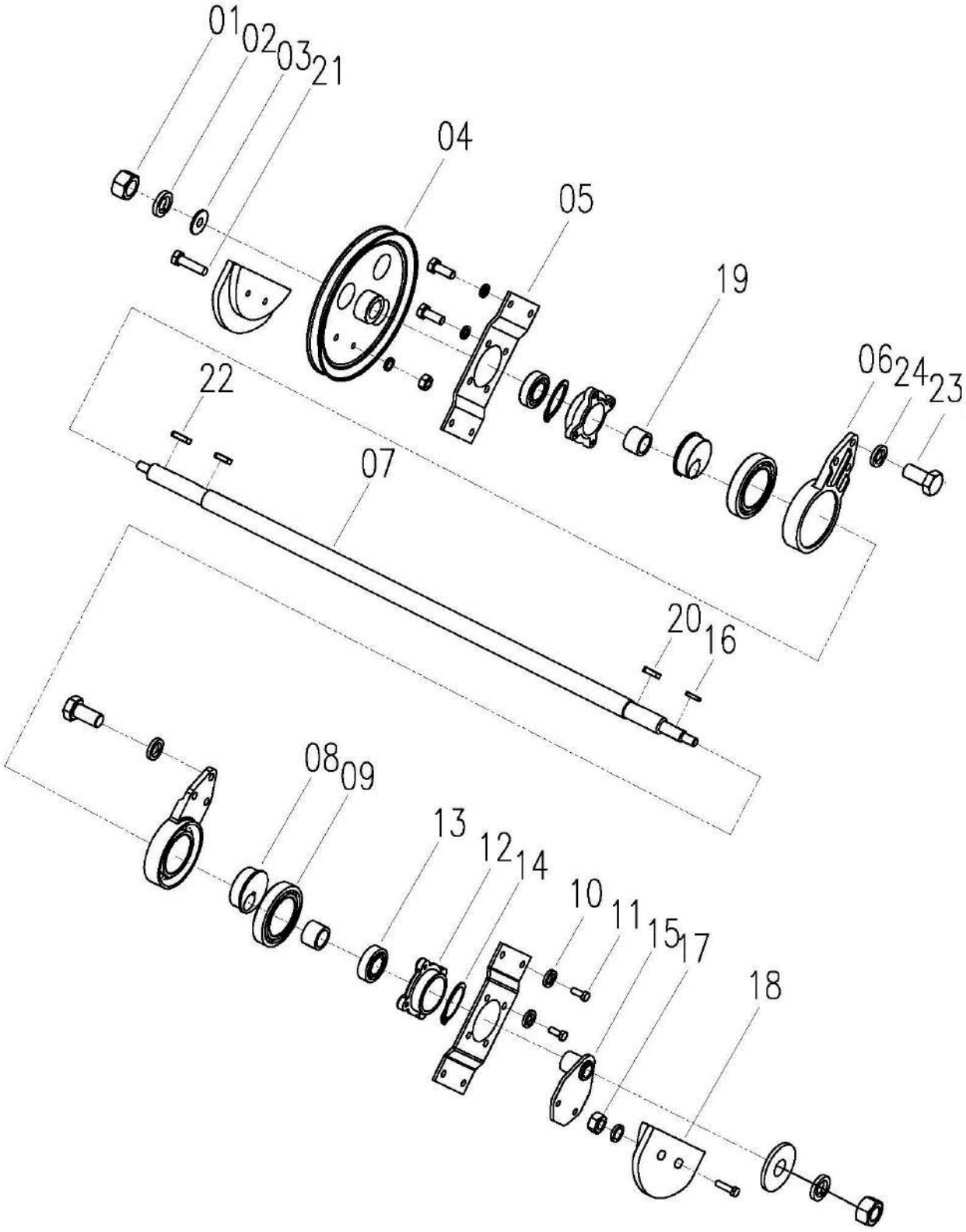

Vibrating Sieve Driving Assy W2.5K-02HB-13-02-00				
No.	**Description**	**Qty**	**Part Code**	**Remark**
01	Nut M12 × 1.25	2	GB/T6171-86	
02	Washer 12	2	GB/T96-85	
03	Washer 12	2	GB/T93-87	
04	Belt Pulley, Vibrating Sieve	1	W2.5K-02HB-13-02-07-00	
05	Plate	2	W2.5-02B-02-13-02-04	
06	Bearing	2	W2.0-02-13-01-03	
07	Shaft	1	W2.5-02B-02-13-02-01	
08	Eccentric Wheel	2	W2.0-02-13-01-08	
09	Bearing 6012-2rs	2	GB/T276-94	
10	Washer 8	20	GB/T93-87	
11	Bolt M8 × 20	16	GB/T5783-86	
12	Bearing Block	2	W2.5-02B-02-13-02-03	
13	Bearing 6205-2rs	2	GB/T276-94	
14	Circlip For Hole 52	2	GB/T893.1-86	
15	Positioning Assist Weld	1	W2.5P-02-02-13-02-05-00	
16	Key A5 × 25	1	GB/T1096-79	
17	Nut M8	4	GB/T6170-87	
18	Counterweight	2	W2.5K-02H-13-02-09-00	
19	Sleeve	2	W2.5-02B-02-13-02-08	
20	Key A8 × 28	2	GB/T1096-79	
21	Bolt M8 × 30	4	GB/T5782-86	
22	Key A8 × 32	1	GB/T1096-79	
23	Bolt M10 × 30	6	GB/T5783-86	
24	Cushion 10	6	GB/T93-87	

Grain Auger Assy W2.5K-02HBF-10-00、W3.5H-02HB-10-00

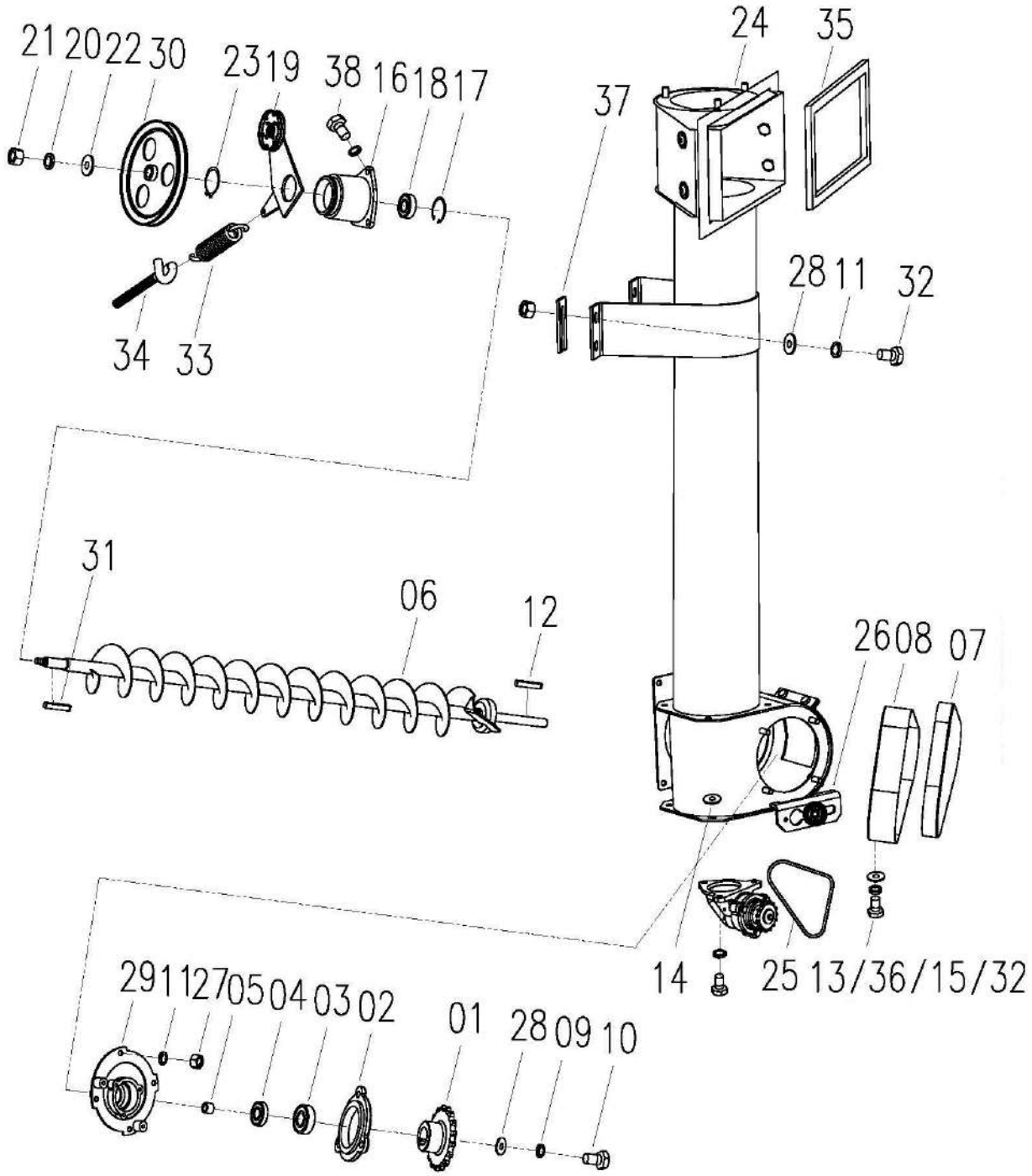

Grain Auger Assy W2.5K-02HBF-10-00、W3.5H-02HB-10-00				
No.	**Description**	**Qty**	**Part Code**	**Remark**
01	Driving Chain Wheel (17 Teeth)	1	L1.8A-03-02-01-04A	
02	Bearing Cover	1	L1.8A-03-04-02-05	
03	Grain Bearing	1	W2.5K-02PC-10A-02	
04	Oil Seal (F) B30x45x10	1	GB/T13871-92	
05	Sleeve	1	L1.8A-03-02-01-05	
06	Horizontal Auger Weld	1	W2.5A-02B-02-10-02-00	
07	Cover Plate	1	W2.5K-02PB-10A-05	
08	Cover Weld	1	W2.5K-02PB-10A-04-00	
09	Retaining Ring 11-35	1	W2.5C-02-02-22D-04	
10	Bolt M10x20	1	GB/T5783-86	
11	Washer 8	15	GB/T93-87	
12	Key C8x30	1	GB/T1096-79	
13	Bolt M6x16	9	GB/T5783-86	
14	Washer 6	6	GB/T97.1-85	
15	Washer 6	9	GB/T93-87	
16	Grain Horizontal Bearing Seat	1	W2.5P-02-02-10-07	
17	Retaining Ring 52	1	GB/T893.1-85	
18	Grain (Miscellaneous) Bearing 6304-2rs	1	W2.5-02-02-10-16	
19	(Grain) Tension Wheel Combination	1	W3.5H-02HA-10-05-00	
20	Washer 12	1	GB/T96-85	
21	Nut M12x1.25	1	GB/T6176-86	
22	Washer 12	1	GB/T93-86	
23	Retaining Ring 63	1	GB/T894.1-85	
24	Vertical Lifting Auger Assy	1	W3.5H-02HB-10-01-00 W2.5K-02HBF-10-01-00	
25	Grain Lifting Chain	1	W2.5K-02PB-10A-15	
26	Tension Chain Wheel Combination	1	L1.8A-03-02-04-00	
27	Nut M8	10	GB/T6170-86	
28	Washer 8	5	GB/T96-85	
29	Bearing Seat Weld	1	W2.5K-02SA-10A-03-00	
30	Belt Pulley, Grain Auger	1	W2.5K-02HB-10-06	
31	Key A5x28	1	GB/T1096-79	
32	Bolt M8x25	6	GB/T5783-86	
33	Tension Spring (Threshing)	1	W2.5-02-02-10-08A	
34	Tension Bolt	1	W2.5-02-02-10-14	
35	Hanging Sponge	1	W2.5-02A-02-10-07	
36	Washer 6	3	GB/T96-85	
37	Adjustment Gasket	On Demand	W2.5K-02HBF-10-20	
38	Bolt M8x20	3	GB/T5783-86	

Vertical Lifting Auger Assy W2.5K-02HBF-10-01-00、W3.5H-02HB-10-01-00

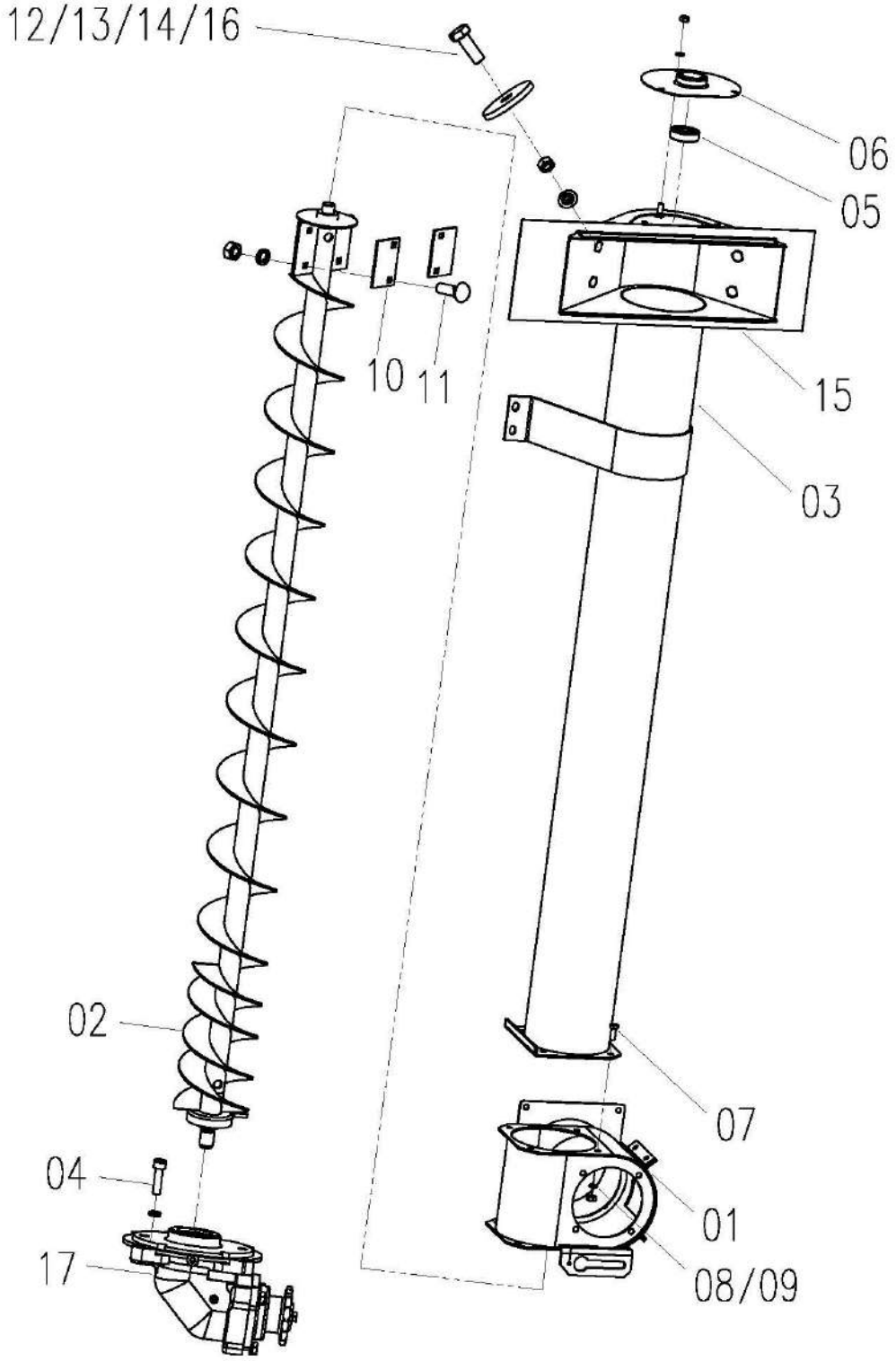

Vertical Lifting Auger Assy W2.5K-02HBF-10-01-00、W3.5H-02HB-10-01-00				
No.	**Description**	**Qty**	**Part Code**	**Remark**
01	Square Four-Way Weld	1	W2.5K-02PB-10A-01-01-00	
02	Vertical Lifting Auger Weld	1	W3.5H-02-10-01-03-00	
	Vertical Lifting Auger Weld	1	W2.5K-02HBF-10-01-03-00	
03	Housing Weld, Vertical Lifting Auger	1	W3.5H-02HB-10S-01-02-00	
	Housing Weld, Vertical Lifting Auger	1	W2.5K-02HBF-10-01-02-00	
04	Screw M8x30	4	GB/T70-85	
05	Bearing 6204-2rs	1	W2.5K-02PD-10A-01-05	
06	Plate (No. 1, Vertical)	1	W2.5-02GX-02-10-01-05	
07	Bolt M8x20	4	GB/T5783-86	
08	Washer 8	15	GB/T93-87	
09	Nut M8	15	GB/T6170-86	
10	Plate	2	W2.5-02GX-02-10-01-06	
11	Bolt M8 × 20	4	GB/T12-1988	
12	Screw M6x16	4	GB/T819-85	
13	Washer	4	W2.0-02-11-02-04	
14	Nut M6	4	GB/T6170-86	
15	Wearing Plate	1	W2.5K-02PX-10-01-04	
16	Washer 6	4	GB/T93-87	
17	Bearing 6204-2rs	1	W2.5K-02HBF-10-01-10-00	

Grain Tension Pulley Combination W2.5K-02HB-56-28A-01-00

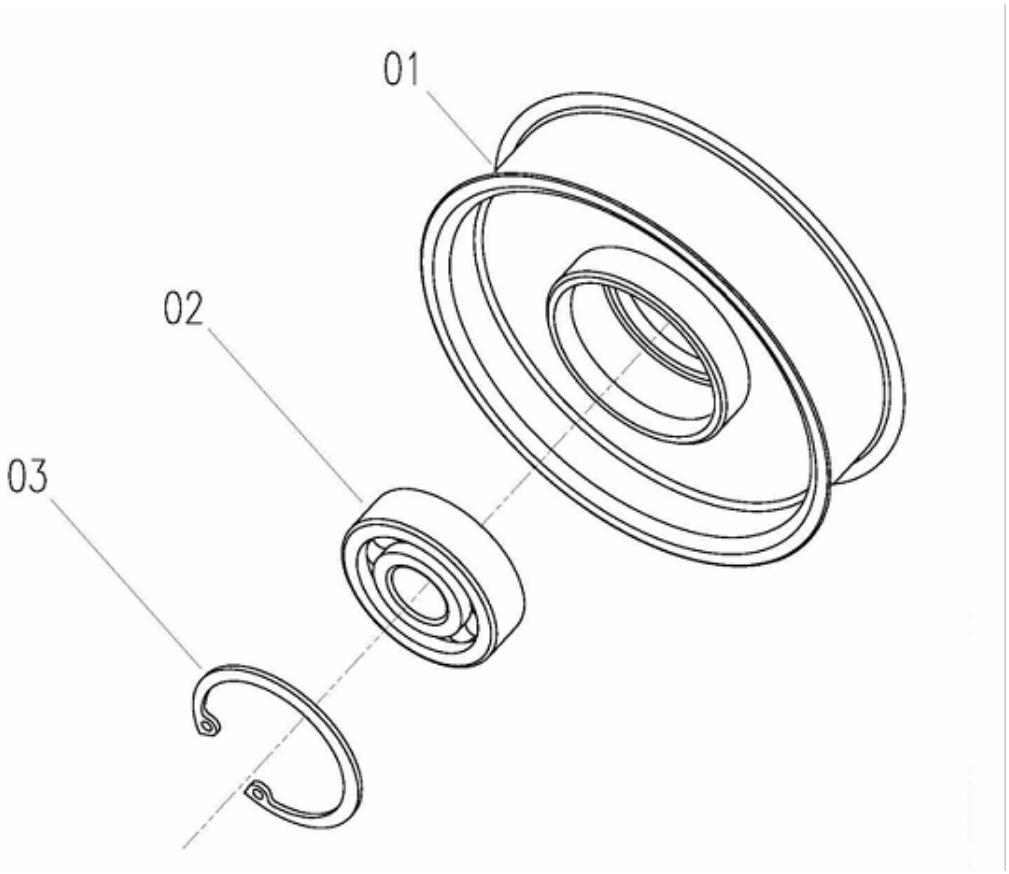

No.	Description	Qty	Part Code	Remark
01	Grain Tension Pulley	1	W2.5K-02HB-56-28A-01-01	
02	Bearing 6302-2rs	1	GB/T276	
03	Cir-clip For Hole 47	1	GB/T893.1	

Tension Chain Wheel Combination L1.8A-03-02-04-00

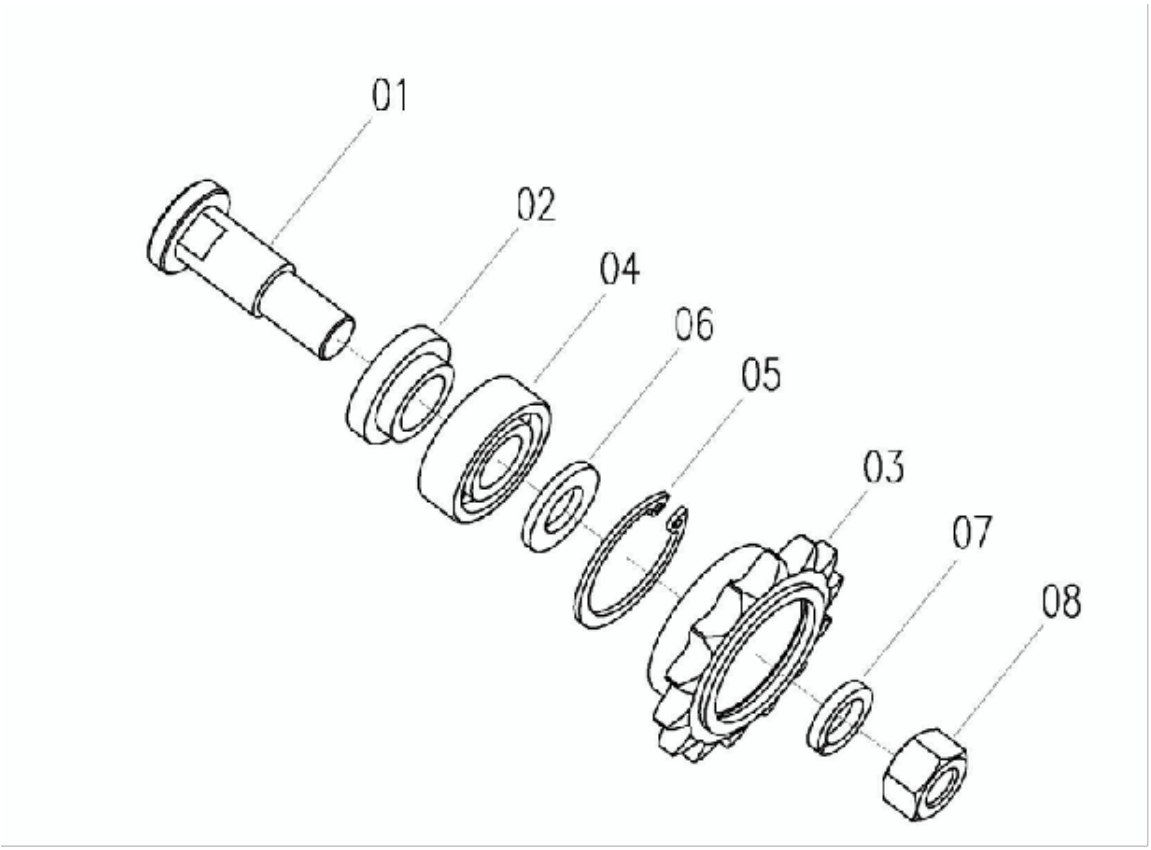

No.	Description	Qty	Part Code	Remark
01	Pin Shaft Φ15x25	1	L1.8A-03-02-04-01	
02	Tension Sleeve Φ15.5x10.4	1	L1.8A-03-02-04-02	
03	Tension Chain Wheel 08bx14	1	L1.8A-03-02-04-03	
04	Bearing 6202-2rs	1	GB/T276-94	
05	Circlip For Hole 35	1	GB/T893.1-86	
06	Washer 12	1	GB/T97.1-85	
07	Washer 12	1	GB/T93-87	
08	Nut M12	1	GB/T6170-86	

Gearbox Assy W2.5K-02HBF-10-01-10-00

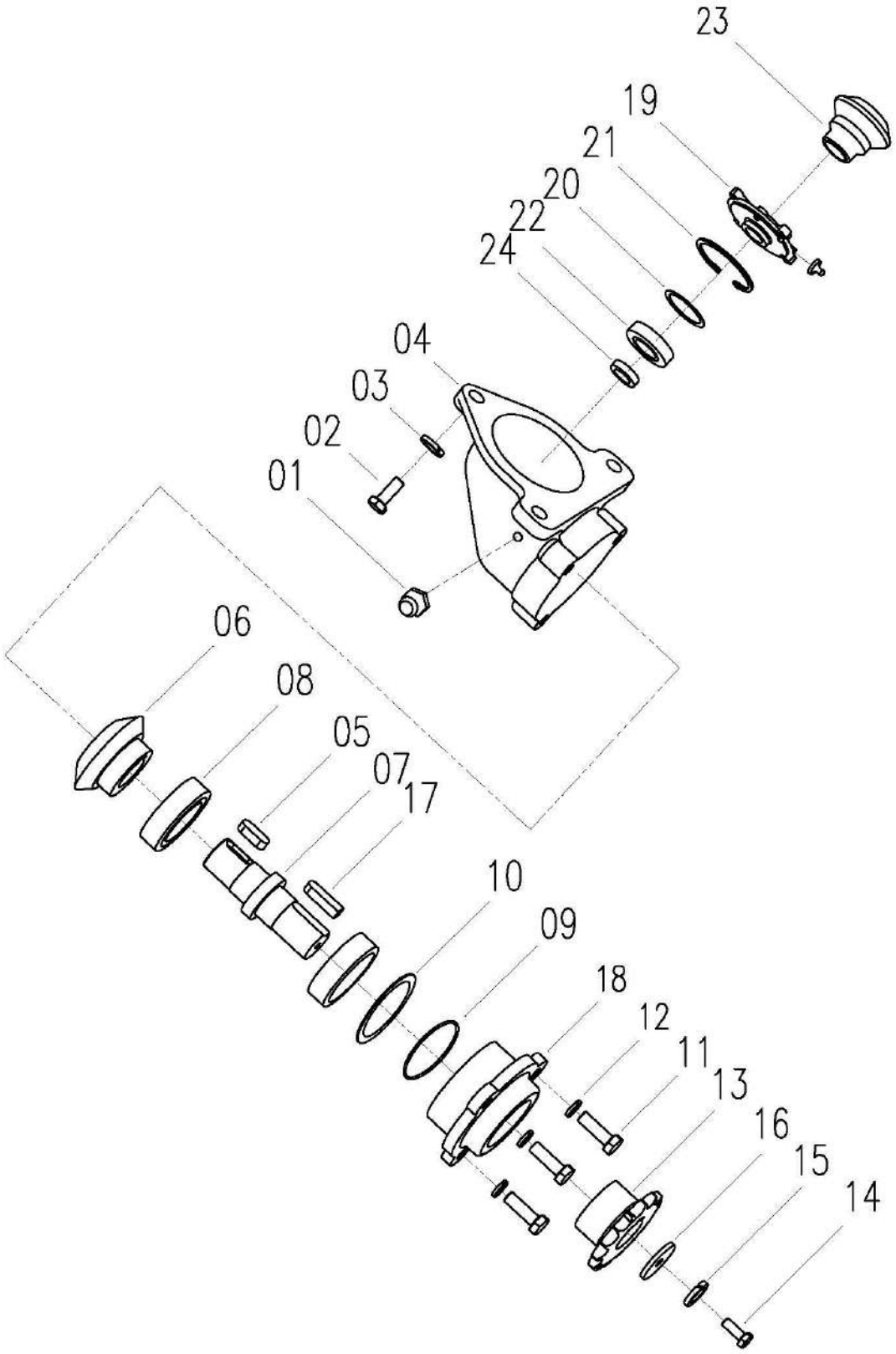

Gearbox Assy W2.5K-02HBF-10-01-10-00				
No.	**Description**	**Qty**	**Part Code**	**Remark**
01	Oil Cup M6	2	JB/T7940.1	
02	Bolt M10 × 25	3	GB/T5783	
03	Washer 10	3	GB/T93	
04	Housing, Gear Box	1	L1.8A-03-04-03-01	
05	Key A8 × 20	1	GB/T1096	
06	Bevel Gear	1	L1.8A-03-04-03-05	
07	Shaft, Chain Wheel	1	L1.8A-03-04-03-03	
08	Bearing 6205-2rs	2	W2.5E-01B-02Y-02-07	
09	O Ring 58x3.55	1	GB/T3452.1	
10	Adjust Pad	On Demand	W2.5K-02HBF-10-01-10-02	
11	Bolt M8 × 25	3	GB/T5783	
12	Washer 8	3	GB/T93	
13	Chain Wheel (15)	1	L1.8A-03-02-03-01	
14	Bolt M6 × 20	1	GB/T5783	
15	Washer 6	1	GB/T93	
16	Retaining Ring	1	L1.8A-01-02-17	
17	Key C8 × 30	1	GB/T1096	
18	Bearing Block	1	W2.5K-02HBF-10-01-10-01	
19	Bearing Block	1	L1.8A-03-04-01-01	
20	Pad	1	W2.5-02G-02-10-01-05	
21	Retaining Ring 62	1	GB/T893.2	
22	Bearing 6206-2rs	1	W2.5K-02PD-10A-01-04	
23	Bevel Gear	1	W2.5-02G-02-10-01-04	
24	Oil Seal （F）B38x52x12	1	GB/T13871	

Windshield Combination W2.5K-02HX-11-00

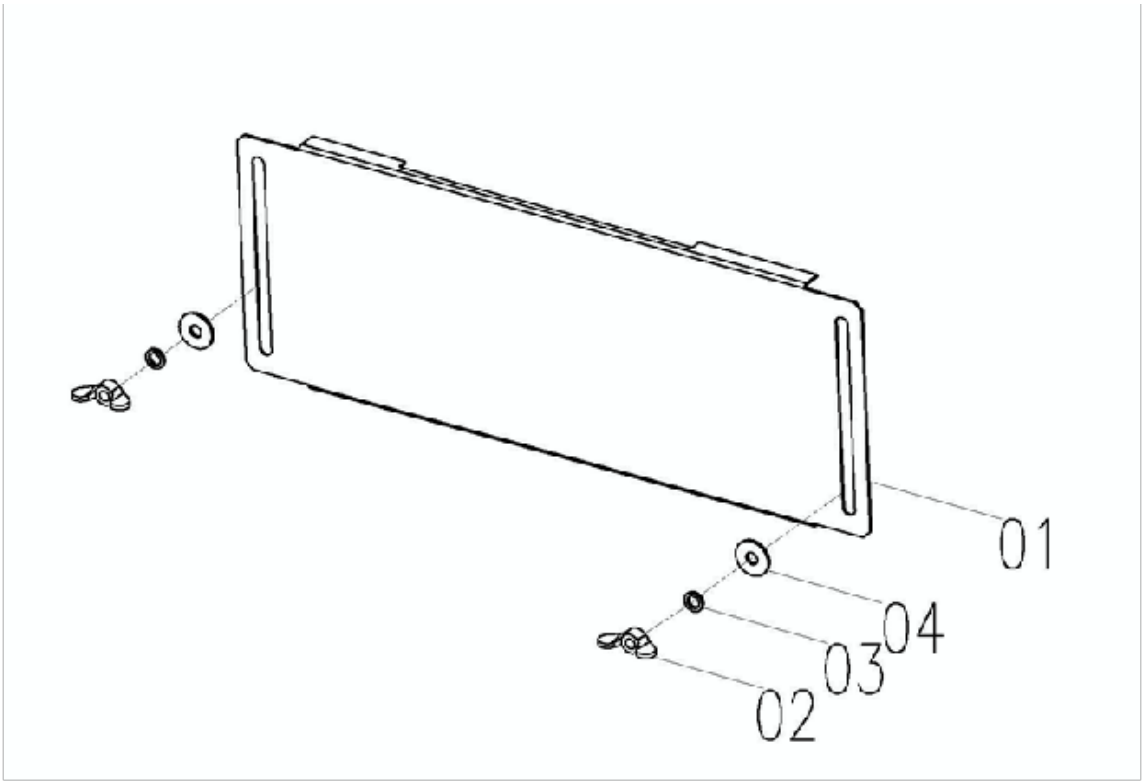

No.	Description	Qty	Part Code	Remark
01	Windshield	1	W2.5K-02HX-11-01	
02	Nut M8	2	GB/T62-88	
03	Washer 8	2	GB/T93	
04	Washer 8	2	GB/T96	

Front Cover Assy W2.5K-02HX-24-00

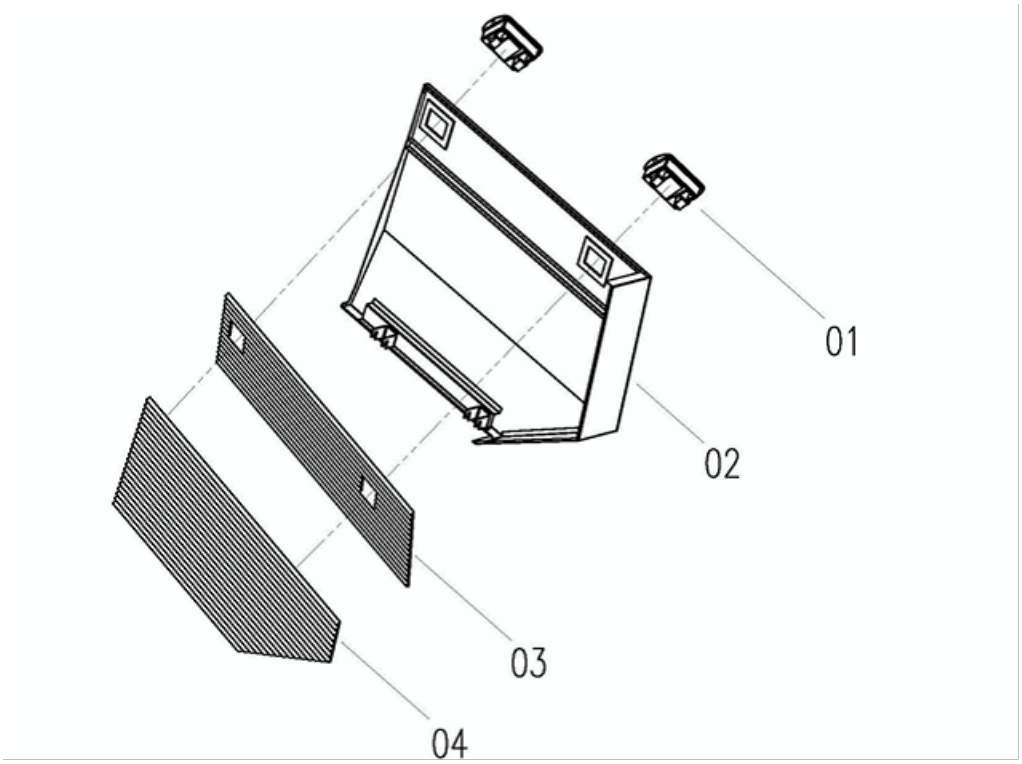

No.	Description	Qty	Part Code	Remark
01	Buckle	2	WD.2MA.73-02	
02	Cover Weld, Left, Front	1	W2.5K-02HX-24-01-00	
03	Sound-Absorbing Sponge, Lower	1	W2.5K-02HX-24-03	
04	Sound-Absorbing Sponge, Upper	1	W2.5K-02HX-24-02	

Tension Wheel Assy W3.5H-02HA-12-00

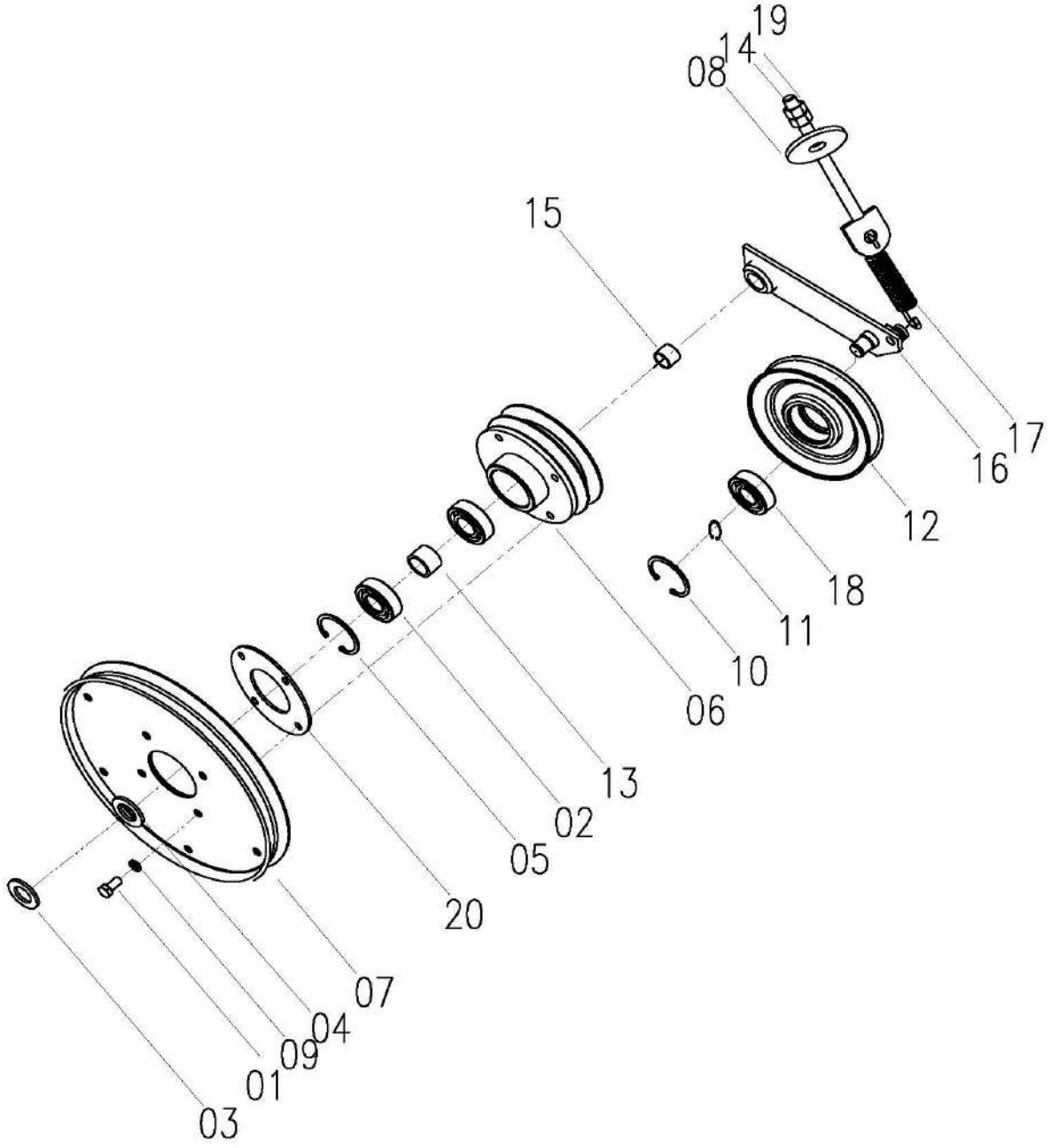

Tension Wheel Assy W3.5H-02HA-12-00

No.	Description	Qty	Part Code	Remark
01	Bolt M8 × 18	4	GB/T5783	
02	Bearing 6204-Rs	2	GB/T276	
03	Washer	1	W2.5-02-02-12-06	
04	Retaining Ring 20	1	GB/T894.1	
05	Retaining Ring 47	1	GB/T893.1	
06	Belt Pulley	1	W3.5H-02HA-12-02	
07	Transition Wheel	1	W2.5K-02HB-12-01A	
08	Nut M8	2	GB/T6170	
09	Washer 8	4	GB/T93	
10	Retaining Ring 15	1	GB/T894.1	
11	Retaining Ring 42	1	GB/T893.1	
12	Belt Pulley Assy	1	W2.5P-02-02-12-04-00	
13	Sleeve	1	W2.5-02-02-12-05	
14	Adjusting Screw	1	W2.5K-02HB-12-04	
15	Bearing (1620)	1	W2.5-02-01-14-05	
16	Tension Frame Weld	1	W2.5K-02HB-12-03-00	
17	Spring (Rocking)	1	W2.5K-02HB-12-09	
18	Bearing 6302-2rs	1	W2.5P-02-02-12-08	
19	Washer 8	1	GB/T97.1	
20	Plate	1	W2.5K-02HB-12-10	

Main Clutch Tension Assy W2.5C-02-02-22C-00 W2.5C-02-02-22E-00

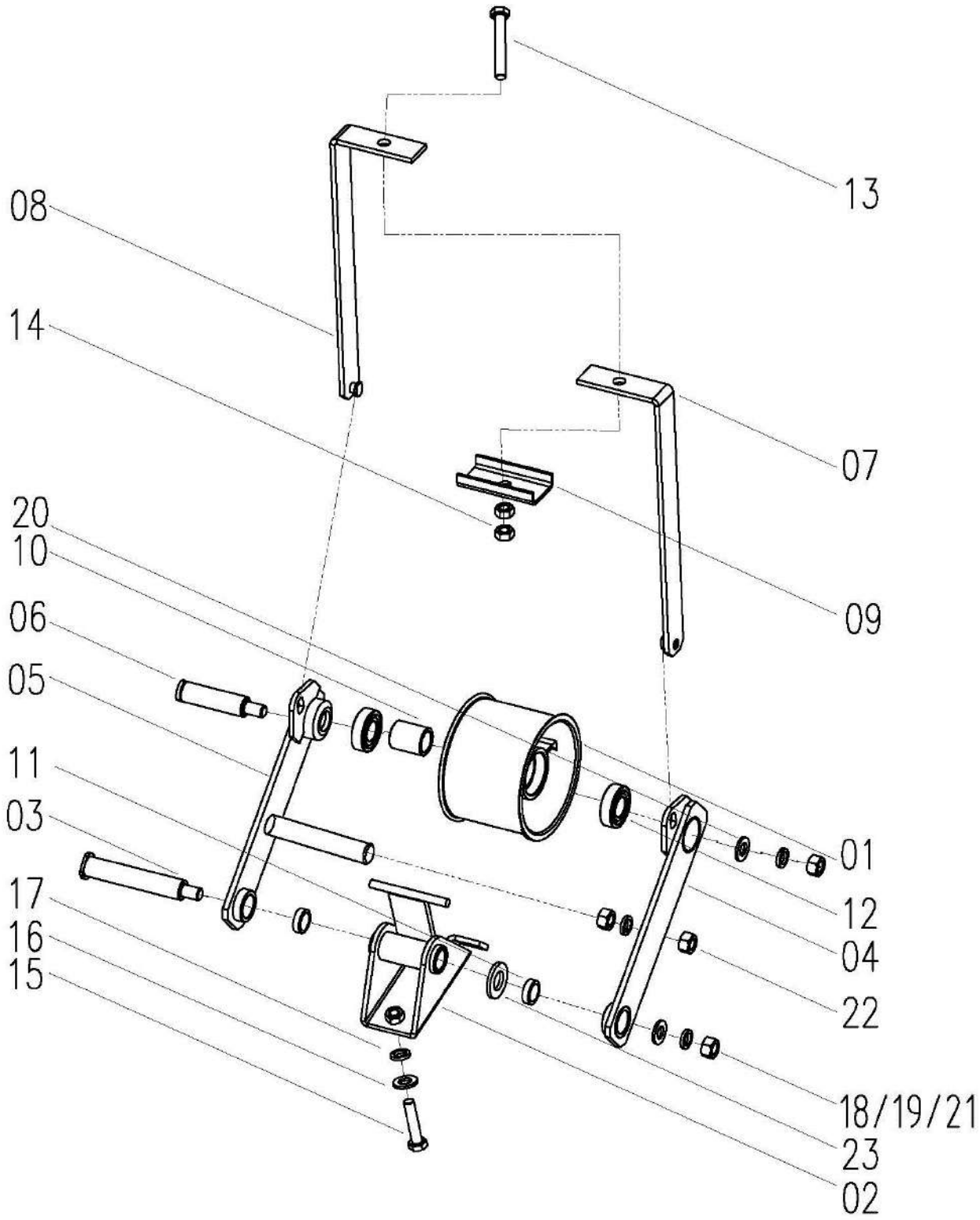

Main Clutch Tension Assy W2.5C-02-02-22C-00 W2.5C-02-02-22E-00				
No.	**Description**	**Qty**	**Part Code**	**Remark**
01	Main Clutch Tension Wheel	1	W2.5C-02-02-22C-01	
02	Connector Weld	1	W2.5C-02-02-22C-02-00	
	Connector Weld	1	W2.5C-02-02-22CZ-02-00	
03	Shaft	1	W2.5C-02-02-22C-03	
04	Arm Weld, Left	1	W2.5C-02-02-22C-04-00	
05	Arm Weld, Right	1	W2.5C-02-02-22C-05-00	
06	Shaft	1	W2.5C-02-02-22C-06	
07	Left Pull Plate Weld	1	W2.5C-02-02-22C-07-00	
08	Right Pull Plate Weld	1	W2.5C-02-02-22C-08-00	
09	Plate	1	W2.5C-02-02-22C-09	
10	Sleeve	1	W2.5C-02-02-22C-10	
11	Bearing (1620)	2	W2.5C-02-02-22C-11	
12	Bearing 6004-2rs	2	W2.5C-02-02-22C-12	
13	Pull Rod	1	W2.5C-02-02-22C-14	
	Stretch Rod	1	W2.5C-02-02-22C-14A	
14	Nut M10	2	GB/T6170	
15	Bolt M10 × 30	2	GB/T5783	
16	Washer 10	4	GB/T96	
17	Washer 10	2	GB/T93	
18	Nut M12	3	GB/T6170	
19	Washer 12	3	GB/T93	
20	Retaining Ring (12)	1	WD-150-03.14.01-05	
21	Washer 12	1	GB/T96	
22	Nut M12	1	GB/T6172	
23	Adjustment Gasket	On Demand	W2.5-02-56-20-04	

Frame Combination W2.5K-02HX-26-00

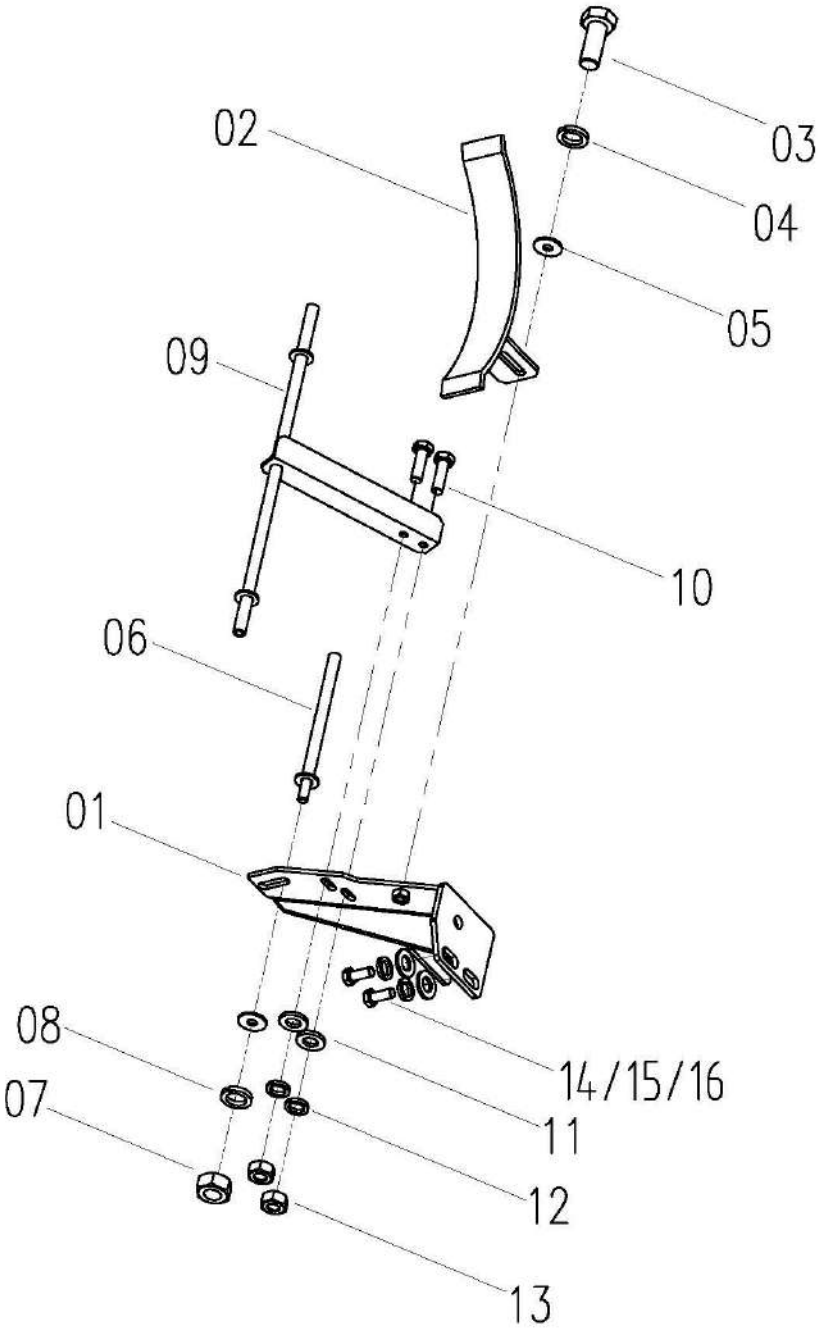

Frame Combination W2.5K-02HX-26-00				
No.	**Description**	**Qty**	**Part Code**	**Remark**
01	Frame Weld	1	W2.5K-02HX-26-01-00	
02	Frame Assy	1	W3.5-02A-26-02-00	
03	Bolt M8 × 20	3	GB/T5783-86	
04	Washer 8	4	GB/T93-86	
05	Washer 8	1	GB/T96-85	
06	Shaft Weld	1	W2.5-02G-02-25-03-00	
07	Nut M8	1	GB/T6170-86	
08	Washer 8	1	GB/T96-85	
09	Support Frame Weld	1	W2.5K-02PD-25-02-00	
10	Bolt M6 × 18	2	GB/T5783-86	
11	Washer Plain 6	2	GB/T97.1-85	
12	Cushion 6	2	GB/T93-87	
13	Nut M6	2	GB/T6170-86	
14	Bolt M10 × 25	3	GB/T5783-86	
15	Washer 10	3	GB/T97.1-85	
16	Cushion 10	3	GB/T93-87	

Cover Assy, Left W2.5K-02HX-25-00

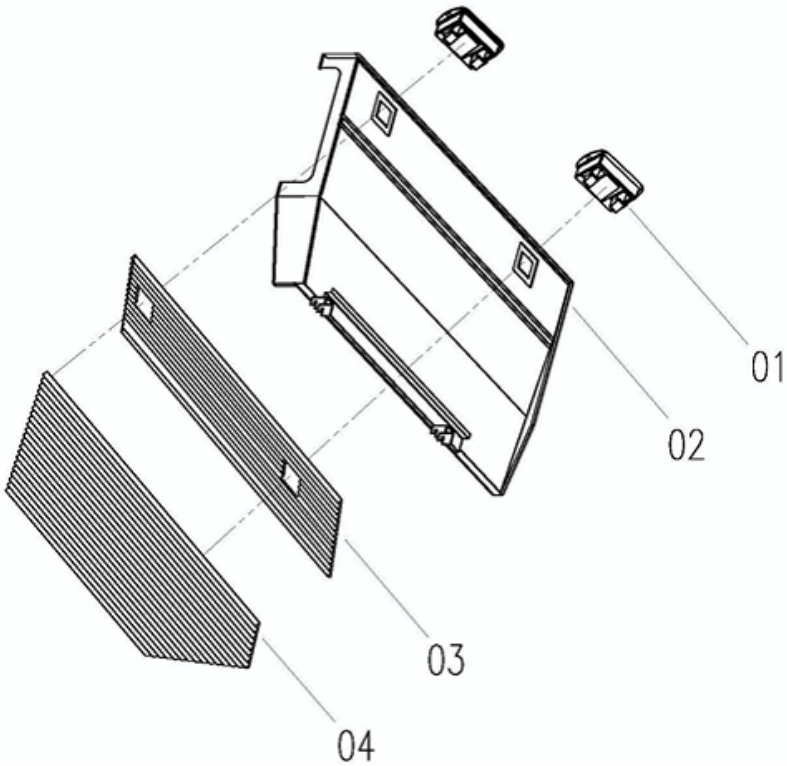

No.	Description	Qty	Part Code	Remark
01	Buckle	2	WD.2MA.73-02	
02	Cover Weld, Left, Front	1	W2.5K-02HX-25-01-00	
03	Sound-Absorbing Sponge, Lower	1	W2.5K-02HX-24-03	
04	Sound-Absorbing Sponge, Upper	1	W2.5K-02HX-24-02	

Cover Weld, Lower, Rear W3.5H-02HA-23A-00

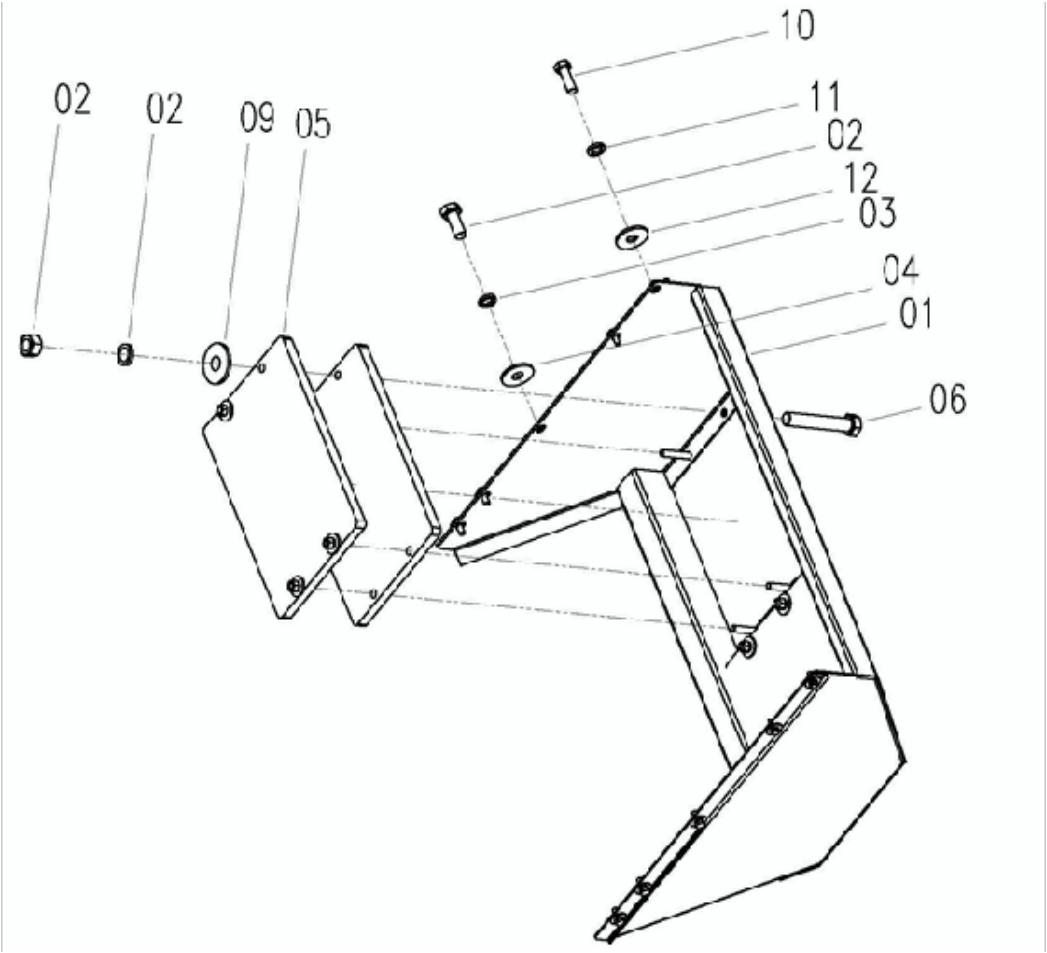

No.	Description	Qty	Part Code	Remark
01	Cover Weld, Lower, Rear	1	W3.5H-02HA-23A-01-00	
02	Bolt M810× 25	6	GB/T5783	
03	Washer 10	6	GB/T96	
04	Washer 10	6	GB/T93	
05	Counterweight	4	W2.5-02-23A-02	
06	Bolt M12 × 70	8	GB/T5782	
07	Nut M12	8	GB/T6170	
08	Washer 12	8	GB/T96	
09	Washer 12	8	GB/T93	
10	Bolt M8 × 25	4	GB/T5783	
11	Washer 8	4	GB/T96	
12	Washer 8	4	GB/T93	

Ruilong（Export）Corn Device Assy W3.5H-21D-00

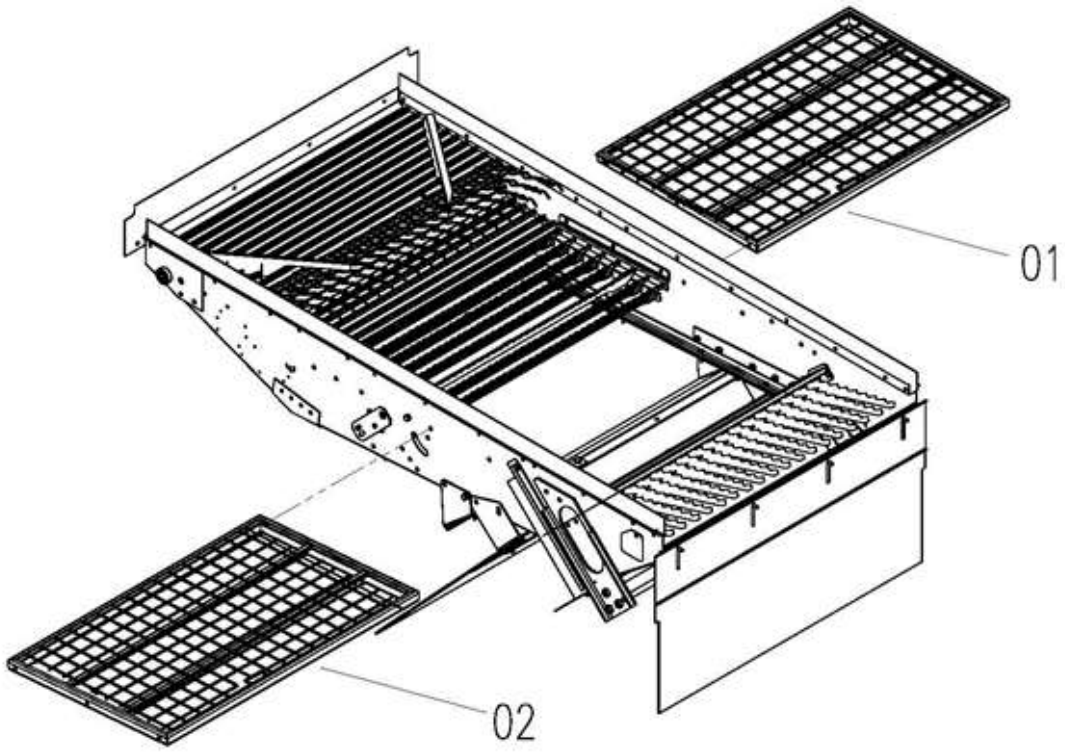

No.	Description	Qty	Part Code	Remark
01	Corn Device Sieve Assy A	1	W3.5H-21D-01-00	
02	Corn Device Sieve Assy B	1	W3.5H-21D-02-00	

Corn Device Sieve Assy A W3.5H-21D-01-00

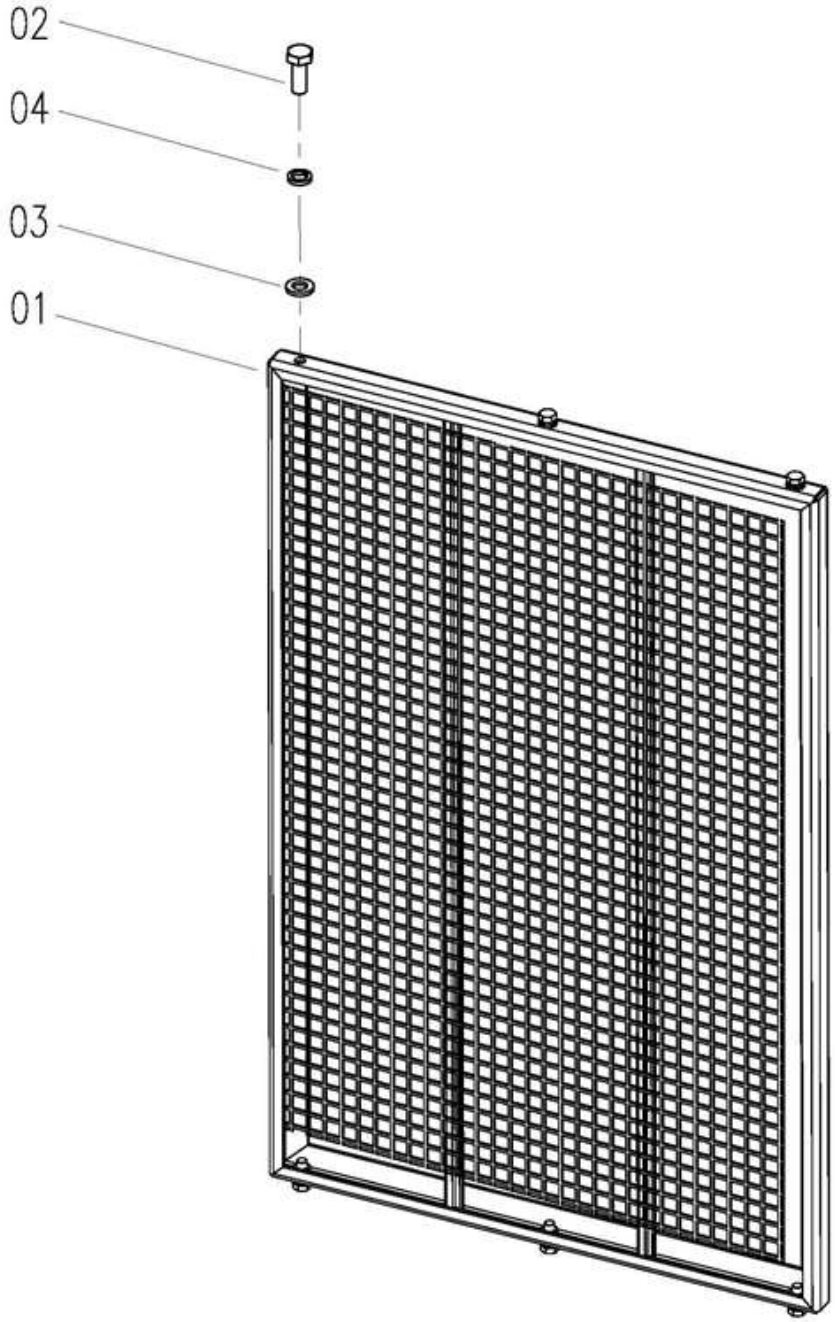

No.	Description	Qty	Part Code	Remark
01	Upper Sieve Welding	1	W3.5H-21D-01-01-00	
02	Bolt M8x20	6	GB/T5783	
03	Washer 8	6	GB/T93	
04	Washer 8	6	GB/T97.1	

Corn Device Sieve Assy B W3.5H-21D-02-00

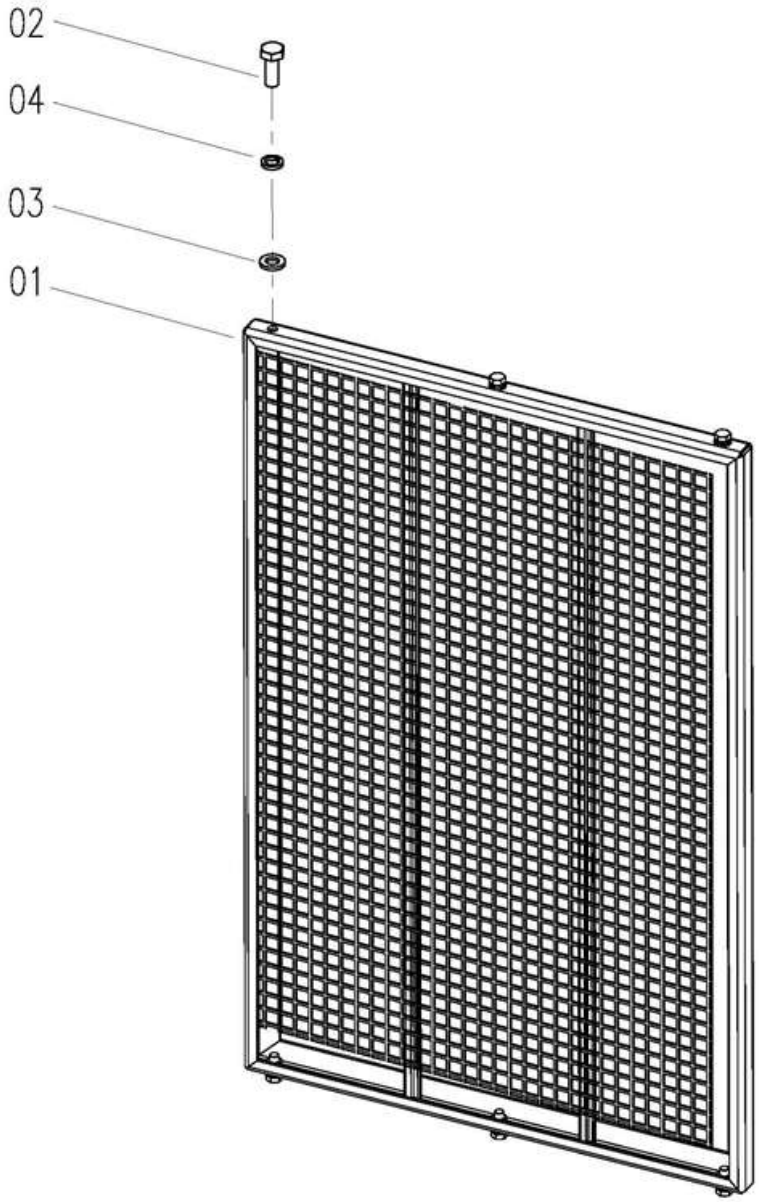

No.	Description	Qty	Part Code	Remark
01	Upper Sieve Welding	1	W3.5H-21D-02-01-00	
02	Bolt M8x20	6	GB/T5783	
03	Washer 8	6	GB/T93	
04	Washer 8	6	GB/T97.1	

III、Chassis Part

Chassis Assy W2.5H-03QA-00

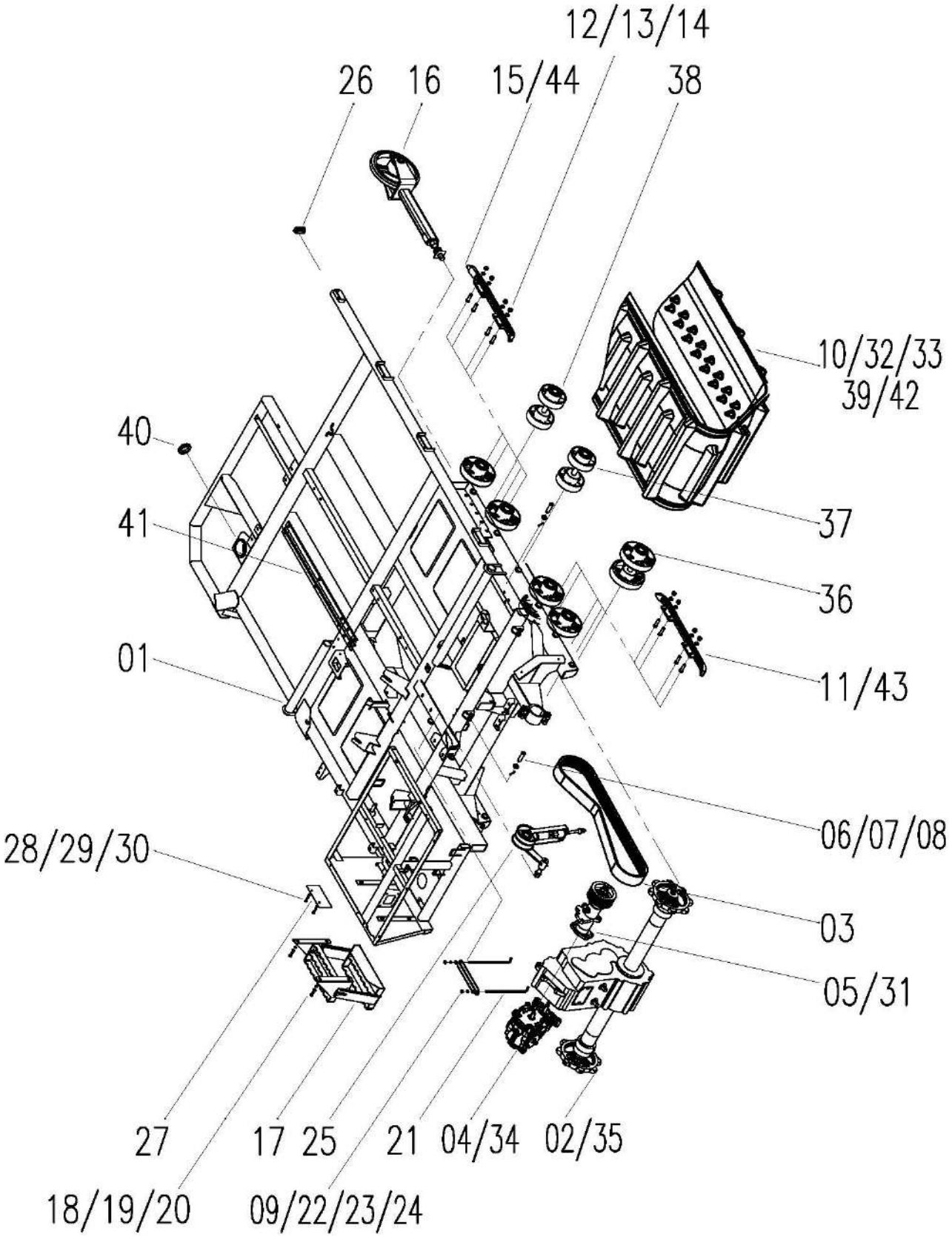

Chassis Assy W2.5H-03QA-00				
No.	**Description**	**Qty**	**Part Code**	**Remark**
01	Chassis Weld	1	W2.5H-03QA-01-00	
02	Gearbox Assy	1	W2.5DA-03Q-02-00	65#Gearbox
03	Joint Belt, Walking 9J-5-1605	1	W2.5DA-03H-31	Imported Belt
04	HST Assy	1	W2.0-03(R)-03A-00	40cchst Optional
05	HST Connector	1	W2.5DA-03H-10-00	Selection Of Grease Lubrication
06	Pin Shaft B16×55	2	GB/T882	
07	Washer 16	2	GB/T97.1	
08	Pin 4×30	2	GB/T91	
09	Press Plate	1	W2.5DA-03H-35Q	
10	550×90×51 45mm Rubber Track	2	W2.5DA-03Q-41	Optional
11	Guide Rail Weld, Front	2	W2.5D-03-32-00	Selection Of Forging Guide Rail
12	Bolt M12×35	16	GB/T5783	Grade 10.9
13	Nut M12	16	GB/T6170	Grade 10
14	Washer 12	16	GB/T93	
15	Guide Rail Weld, Rear	2	WD.4FE.33	Optional for Forging Guide Rail
16	Tension Pulley Assy	2	W5.0-03X-27-00	
17	Pedal Assy	1	W2.5DA-03H-16-00	
18	Bolt M6×16	4	GB/T5783	
19	Washer 10	4	GB/T97.1	
20	Washer 10	4	GB/T93	
21	Hook	2	W2.5DA-03H-36Q	
22	Nut M8	2	GB/T6170	
23	Washer 8	2	GB/T97.1	
24	Washer 8	2	GB/T93	
25	Tension Pulley Assy, Walking	1	W3.5H-03B-17-00	
26	Plug, Rubber	1	W2.5DA-03H-34D	
27	Plate	1	W2.5DA-03N-20	
28	Bolt M6×16	2	GB/T5783	
29	Washer 6	2	GB/T97.1	
30	Washer 6	2	GB/T93	
31	HST Connector	1	W2.5DA-03H-10D-00	Optional for Oiling And Lubrication
32	450×90×51 45mm Rubber Track	2	W2.5DA-03Q-42	Optional
33	500×90×51 45mm Rubber Track	2	W2.5DA-03Q-44	Optional
34	HST Assy	1	W2.0-03(R)-03-00	45cchst Optional
35	Gear Box Assy	1	W3.5H-03A-02-00	85 Gearbox Selection
36	Roller Assy, Support	10	W3.5H-03A-06-00	

Chassis Assy W2.5H-03QA-00

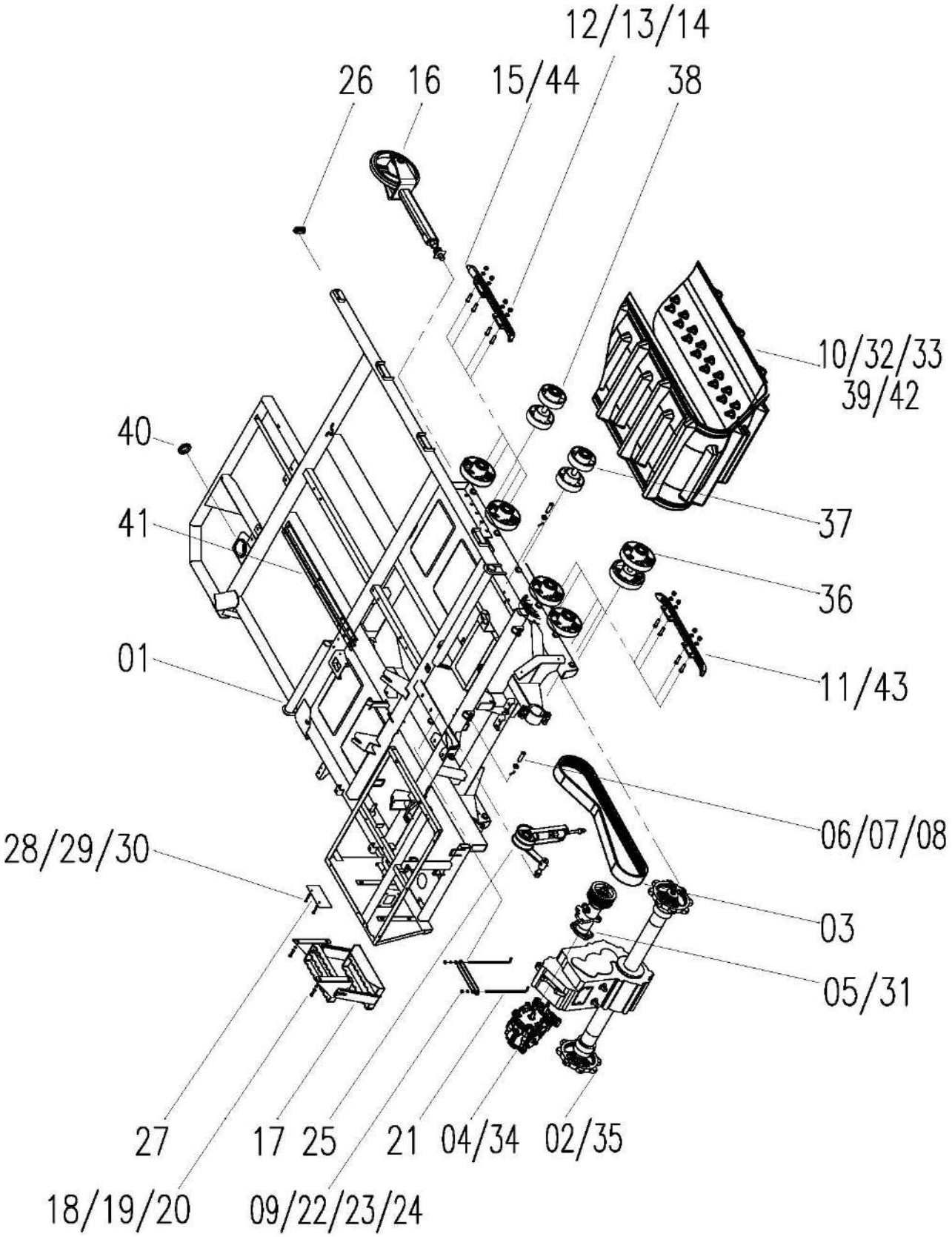

Chassis Assy W2.5H-03QA-00				
No.	**Description**	**Qty**	**Part Code**	**Remark**
37	Balanced Roller Assy	2	W3.5H-03A-07-00	
38	Roller Assy, Support	2	W3.5H-03A-28-00	
39	450×90×51 55mm Rubber Track	2	W2.5DA-03Q-43	Optional
40	Dust Proof Washer	1	W2.5DA-07-06-03-05	
41	Cable Box	1	W2.5DA-03NA-08-00	
42	500×90×51 45mm Rubber Track	2	W2.5H-03QA-46	Optional for Forging Guide Rail
43	Guide Rail Weld, Front	2	W3.5D-03QA-32	Optional for Forging Guide Rail
44	Guide Rail Weld, Rear	2	W3.5B-03QA-33	Optional for Forging Guide Rail

Gear Box Assy W2.5DA-03Q-02-00

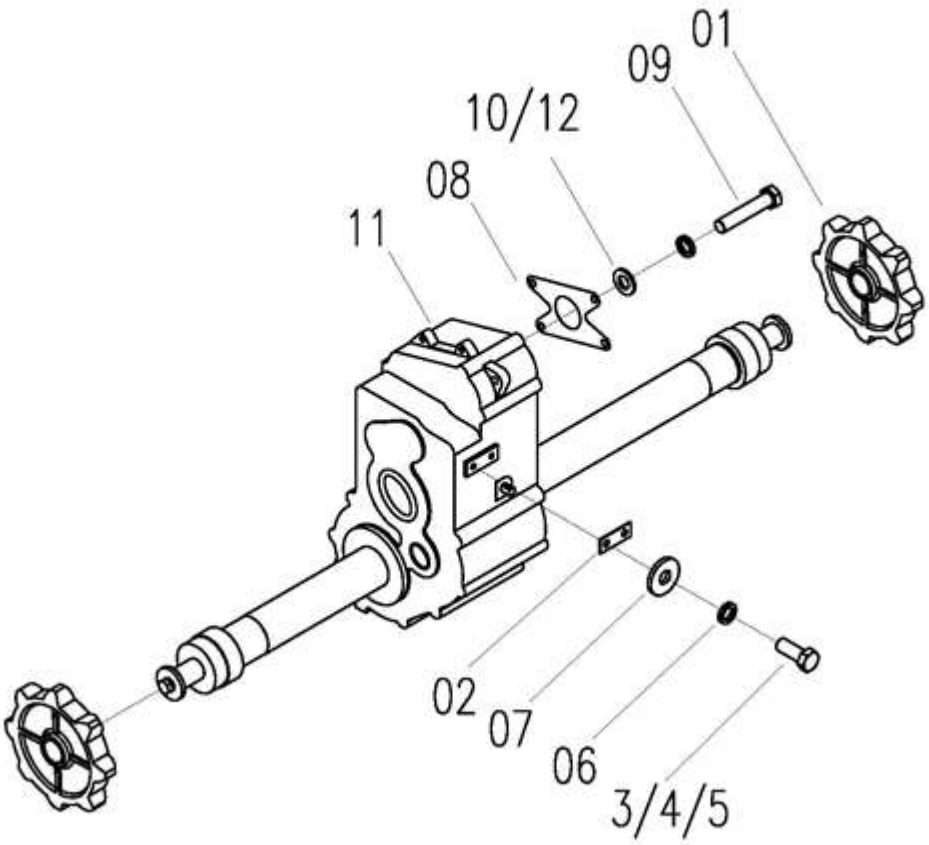

No.	Description	Qty	Part Code	Remark
01	Driving Chain Wheel	2	WD.4MC.2-01C	
02	Adjustment Gasket, Gear Box	On Demand	W2.0-03-02-04	
03	Bolt M12X30	2	GB/T5783-86	Use When Installing One Adjusting Gasket
04	Bolt M12X35	2	GB/T5783-86	Use When Installing 2-3 Adjusting Gaskets
05	Bolt M12X40	2	GB/T5783-86	Use When Installing More Than 3 Adjusting Gaskets
06	Cushion 12	6	GB/T93-87	
07	Special Gasket	2	W2.5C-03D-02-06	
08	HST Gasket	1	W2.0-03（R）-02-12	
09	Bolt M12X1.25X60	4	GB/T5785-86	Grade 8.8
10	Washer, Plain 12	4	GB/T97.1-85	For HST Made In Japan
11	Gear Box Assy	1	W2.5DA-03Q-02-05-00	65 Transmission
12	Washer, Plain 12	1	GB/T97.1-85	For HST Made In Korea

Gear Box Assy W3.5H-03A-02-00

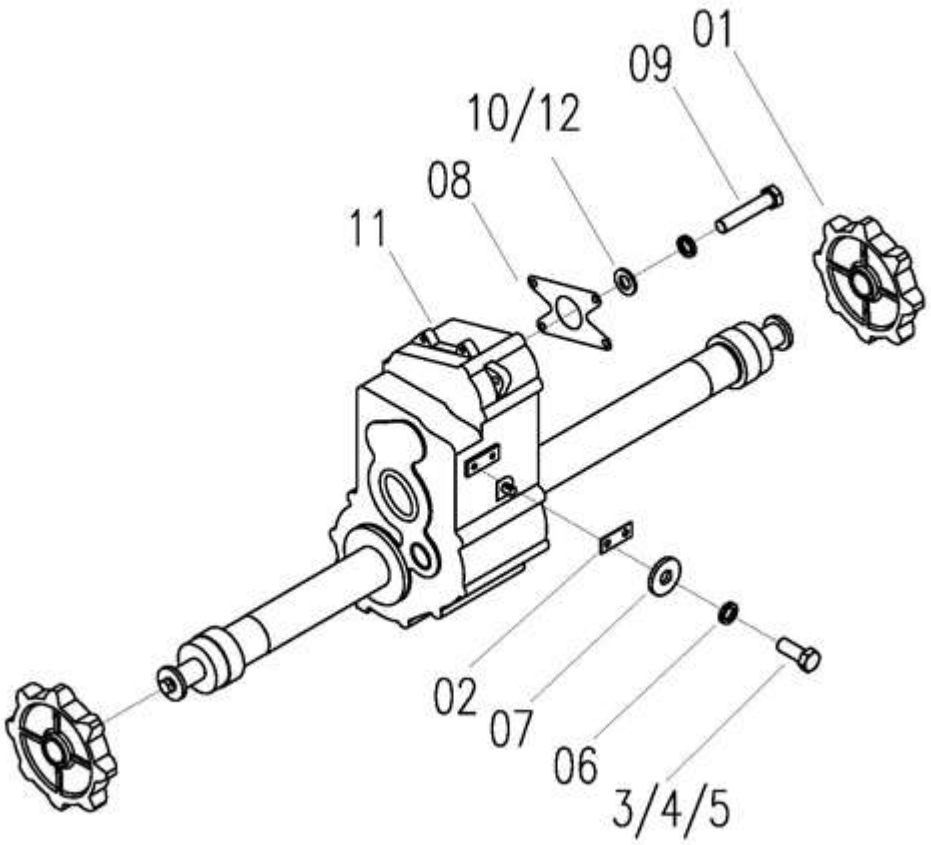

No.	Description	Qty	Part Code	Remark
01	Driving Chain Wheel	2	WD.4MC.2-01C	
02	Adjustment Gasket, Gear Box	On Demand	W2.0-03-02-04	
03	Bolt M12X30	2	GB/T5783-86	Use When Installing One Adjusting Gasket
04	Bolt M12X35	2	GB/T5783-86	Use When Installing 2-3 Adjusting Gaskets
05	Bolt M12X40	2	GB/T5783-86	Use When Installing More Than 3 Adjusting Gaskets
06	Cushion 12	6	GB/T93-87	
07	Special Gasket	2	W2.5C-03D-02-06	
08	HST Gasket	1	W2.0-03（R）-02-12	
09	Bolt M12X1.25X60	4	GB/T5785-86	Grade 8.8
10	Washer, Plain 12	4	GB/T97.1-85	For HST Made In Japan
11	Gear Box Assy	1	W2.5DA-03Q-02-05-00	65 Transmission
12	Washer, Plain 12	1	GB/T97.1-85	For HST Made In Korea

Gearbox Assy (Shift Fork Assy) W2.5DA-03Q-02-05-00

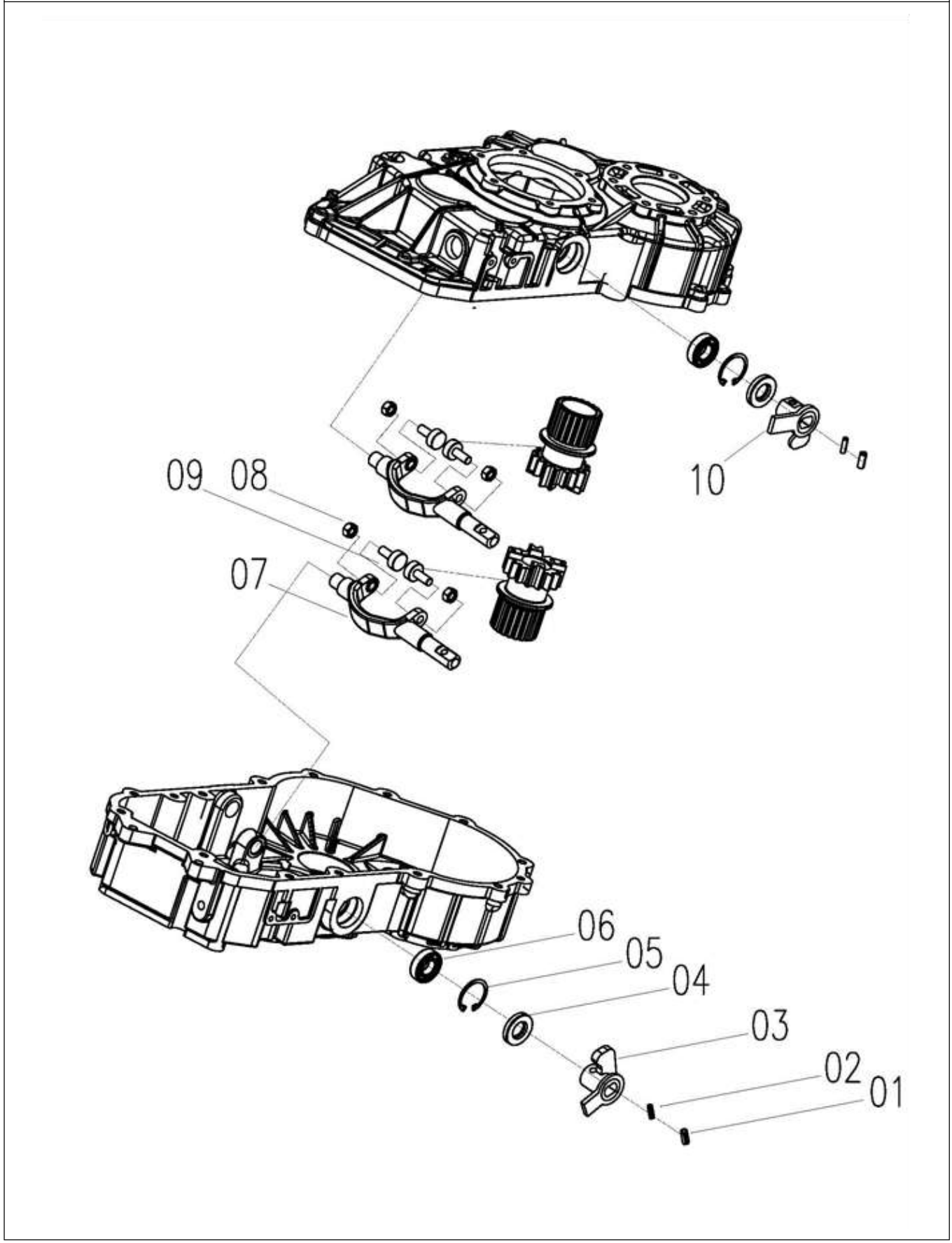

Gearbox Assy (Shift Fork Assy) W2.5DA-03Q-02-05-00				
No.	**Description**	**Qty**	**Part Code**	**Remark**
01	Elastic Cylindrical Pin 8 × 30	2	GB/T879-1986	
02	Elastic Cylindrical Pin 5 × 30	2	GB/T879-1986	
03	Right Rock Assy	1	ZKB40-206a-401-2-00S	
04	Oil Seal FB42 × 20 × 10	2	GB13871-92	
05	Circle Φ42	2	GB893.2-86	
06	Rolling Bearing 6004	2	GB/T276-94	P6C3
07	Single-Chip Wet Friction Fork	2	ZKB65-206-400-1-01L	
08	2# Hexagon Nut M10*1.25	4	GB/T6185.2-2000	
09	Bearing KRV22	4	GB/T6445.1-1996	
10	Left Rock Assy	1	ZKB40-206a-401-1-00S	

Gearbox Assy (Housing Of Gearbox Assy) W2.5DA-03Q-02-05-00

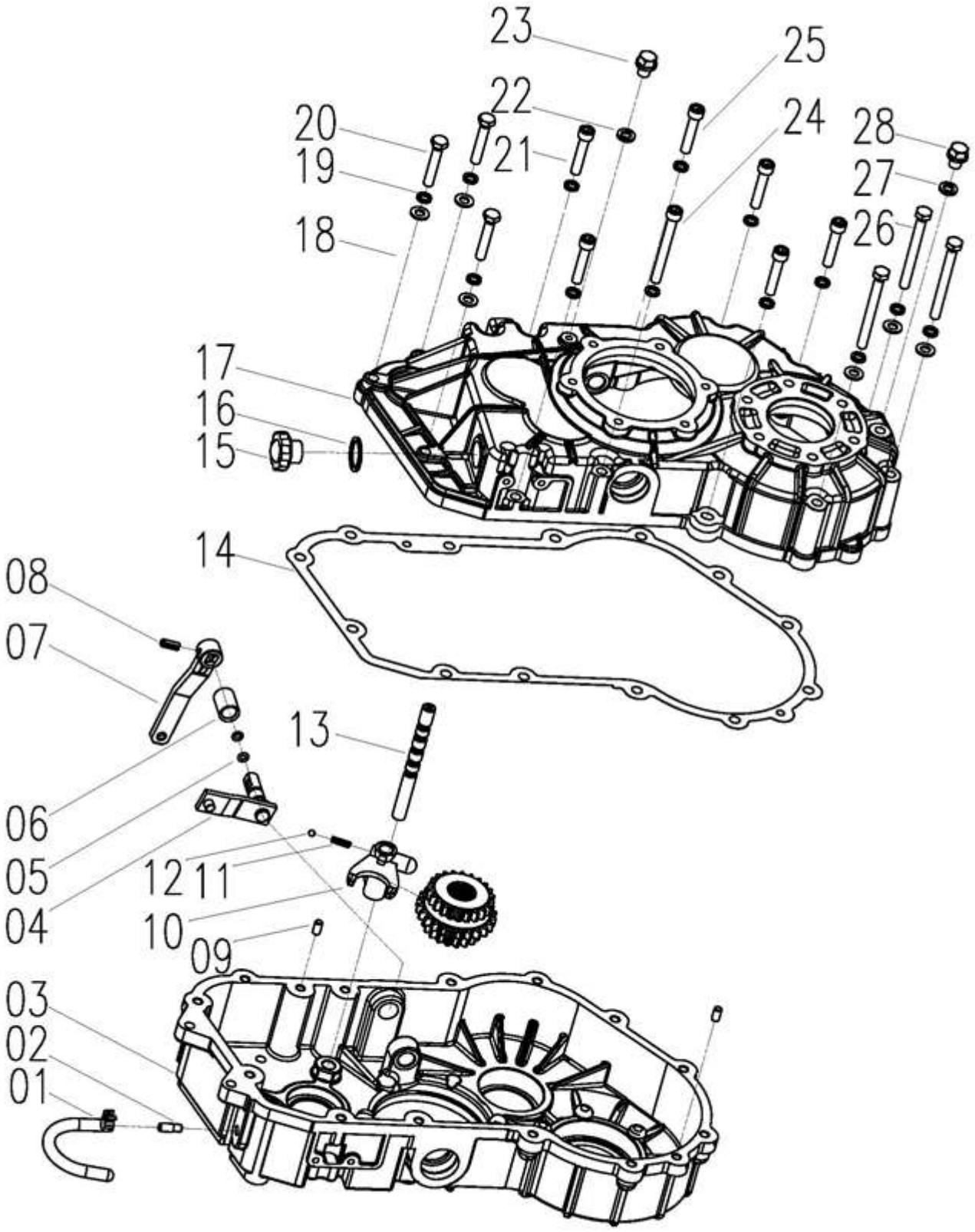

Gearbox Assy (Housing Of Gearbox Assy) W2.5DA-03Q-02-05-00				
No.	**Description**	**Qty**	**Part Code**	**Remark**
01	Air Hose Φ8*200	1	ZKB40.5T-305-008	
02	Ventilation Pipe Joint	1	ZKB40.5T-306-008	
03	Right Housing Of Gearbox	1	ZKB65-306-002J	
04	Speed-Shifting Shaft	1	ZKB65-106-500-1a1	
05	O Seal Φ11.8*，Φ2.65	2	GB3452.1-82	
06	Shaft Sleeve	1	ZKB40-106-500-02	
07	Auxiliary Speed-Shifting Fork Rocker	1	ZKB40-106-500-2b	
08	Elastic Cylindrical Pin 6 × 25	1	GB/T879-1986	
09	Cylindrical Pin D8 × 18	2	GB119-86	
10	Gear Shift Fork	1	ZKB60-106-500-01	
11	Side Shifting Fork Spring	1	ZKB40-106-500-03b	
12	Iron Ball 8	1	GB308-77	
13	Gear Shifter Shaft	1	ZKB40-106-500-04a	
14	Housing Plate	1	ZKB65-306-003	
15	Gas Plug (M12*1.25)	1	D12-37116	
16	Gasket24	1	D12-37115	
17	Left Housing Of Gearbox	1	ZKB65-306-001J	
18	Gasket 10	6	GB97.1-85	
19	Spring Washer 10	13	GB93-87	
20	Hexagon Head Bolt M10×55	3	GB5783-86	
21	Hexagon Socket Head Cap Screw M10×65	1	GB/T70.1-2000	
22	Copper Washer 10	1	ZKB40-04	
23	Plug M10×1	1	ZKB40-03	
24	Hexagon Socket Head Cap Screw M10×90	1	GB/T70.1-2000	
25	Hexagon Socket Head Cap Screw M10×50	5	GB/T70.1-2000	
26	Hexagon Head Bolt M10×110	3	GB5782-86	
27	Copper Washer	1	D12-37145	
28	Plug M12×1.25	1	ZKB40-05	

Gearbox Assy（Inside Of The Housing）W2.5DA-03Q-02-05-00

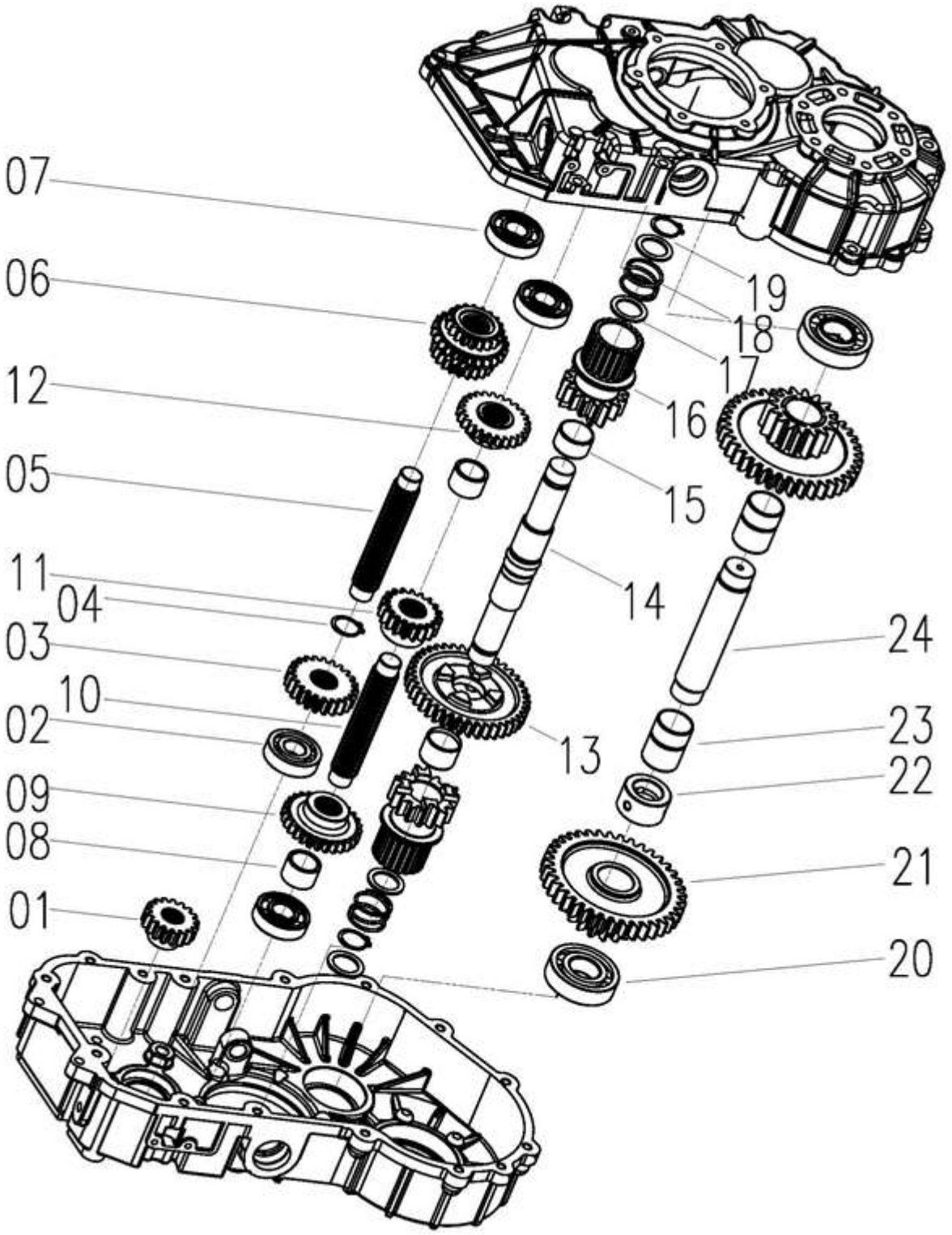

Gearbox Assy（Inside Of The Housing）W2.5DA-03Q-02-05-00				
No.	**Description**	**Qty**	**Part Code**	**Remark**
01	Gear（17×3.25）	1	ZKB65-307a-001	
02	Cylindrical Roller Bearing NJ305E	1	NSK	P6C3
03	Header Gear（23×3.25）	1	ZKB60-301a-002	
04	Circle 30	3	GB894.1-86	
05	Header Shaft	1	ZKB60-301-001	
06	Speed-Shifting Gear	1	ZKB60-301a-003	
07	Bearing 6305	3	0814106305(6305)	P6C3
08	Bearing	1	ZKB60-302-005	
09	Gear Ⅰ（28）	1	ZKB60-302a-002	
10	Speed-Shifting Shaft	1	ZKB60-302-001	
11	Gear Ⅲ（19×3.25）	1	ZKB60-302a-004	
12	Gear Ⅱ（25）	1	ZKB60-302a-003	
13	Steering Clutch Gear	1	ZKB60-203a-100-2（K）	
14	Steering Clutch Shaft	1	ZKB65-203-100-1	
15	Sleeve	2	ZKB60a-303-012	
16	Steering Clutch Gear	2	ZKB60-303a-002(K)	
17	Inner Shaft Ring	2	ZKB60-303-006a	
18	Spring	2	ZK-009bⅡ	
19	External Shaft Ring	2	ZKB60-303-005a	
20	Cylindrical Roller Bearing NJ2207E	2	GB/T283-94	P6C3
21	Steering Clutch Spline Gear	2	ZKB60-304a-002	
22	Shaft Sleeve	1	ZKB60-304a-004	
23	Copper Bearing	2	ZKB60-304-005bⅠ	
24	Idle Shaft	1	ZKB65-304a-001	

Gearbox Assy（Right Housing Assy）W2.5DA-03Q-02-05-00

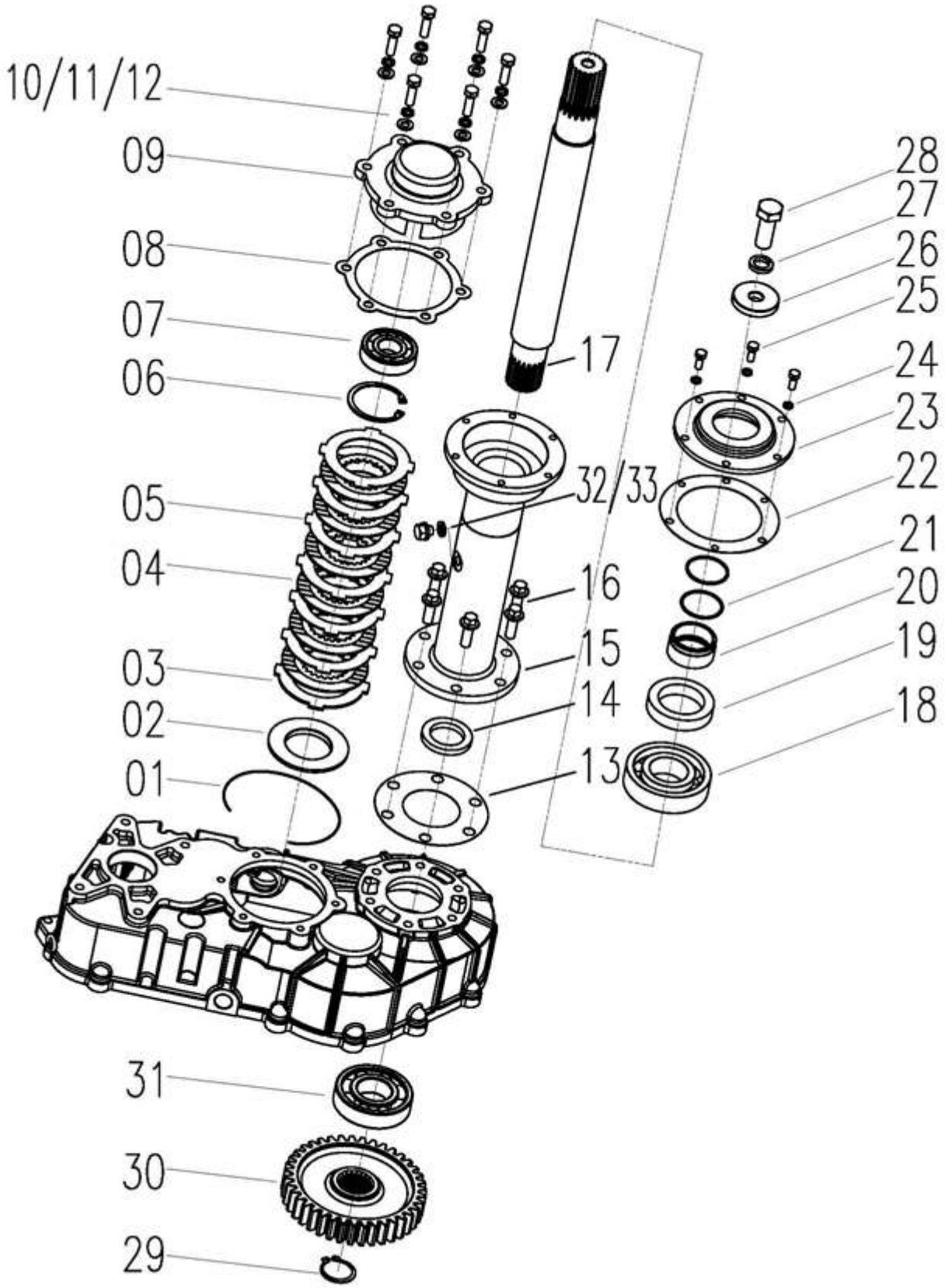

Gearbox Assy（Right Housing Assy）W2.5DA-03Q-02-05-00				
No.	**Description**	**Qty**	**Part Code**	**Remark**
01	Clasp	1	ZKB65-303-010a	
02	Thrust Collar	1	ZKB65-303-007a	
03	Pressure Plate	1	ZKB75-303-009	
04	Inner Friction Sheet	6	ZKB75-303-004	
05	External Friction Sheet	6	ZKB75-303-003	
06	Circle Φ72	1	GB893.2-86	
07	Bearing 6306	1	GB/T276-94	
08	Brake Box Gasket	1	ZKB65-306-010	
09	Brake Box Cover	1	ZKB65-306-009	
10	Gasket 10	6	GB97.1-85	
11	Gasket 10	6	GB93-87	
12	Bolt M10*35-8.8	6	GB5783-86	
13	Shaft Housing Gasket	1	ZKB40-305-009	
14	Oil Sealfb45×65×8	1	GB13871-92	
15	Half Shaft Right Arm	1	ZKB65-205-600BGL	
16	Hexagon Flange Bolt M 12*35	6	GB/T5789-86	
17	Right Shaft	1	ZKB65-305a-002BG	
18	Bearing 6310-Rs	1	GB/T276-94	
19	Skeleton Type Oil Seal	1	MC60×90×18	
20	Sleeve	1	ZKB65-305-003a	
21	O Seal Φ50*2.65	2	GB3452.1-92	
22	Brake Box Gasket	1	ZKB65-12-01L	
23	Gasket Of Half Shaft	1	ZKB65-12-14LK	
24	Gasket 8	6	GB93-87	
25	Hexagon Flange Bolt M8×20-8.8S	6	GB5783-86	
26	Sleeve	1	ZKB65-305-008	
27	Gasket 20	1	GB/T7244	
28	Boltm20×1.5×45	1	GB5786-2000	
29	Circle Φ42	1	GB894.1-86	
30	Drive Gear	1	ZKB80-305a-004	
31	Bearing6309	1	GB/T276-94	
32	Gas Plug（M12×1.25）	1	ZKB40-305-018a	
33	Copper Washer 12	1	D12-37145	

Gearbox Assy（Left Housing Assy）W2.5DA-03Q-02-05-00

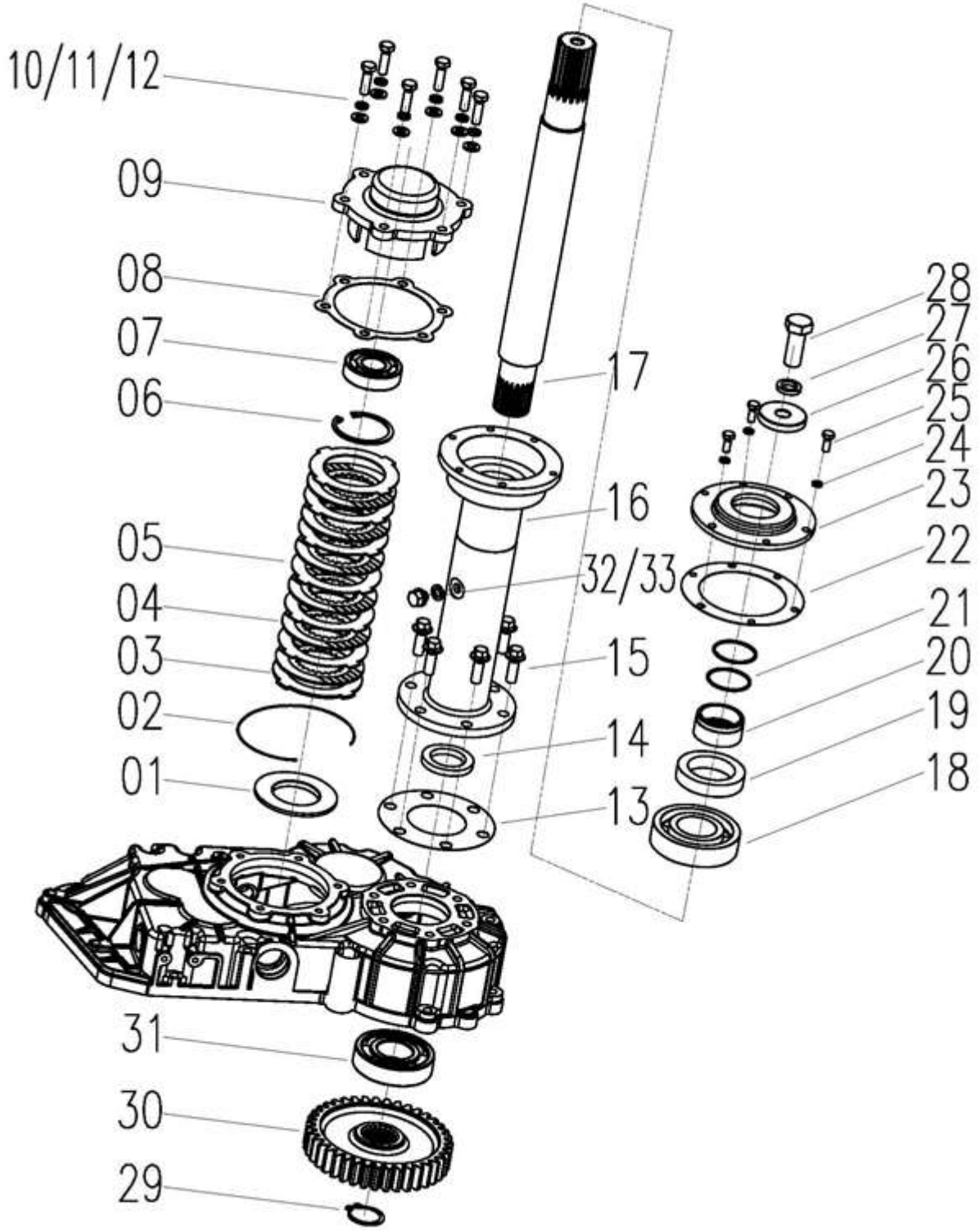

Gearbox Assy（Left Housing Assy）W2.5DA-03Q-02-05-00				
No.	**Description**	**Qty**	**Part Code**	**Remark**
01	Clasp	1	ZKB65-303-010a	
02	Thrust Collar	1	ZKB65-303-007a	
03	Pressure Plate	1	ZKB75-303-009	
04	Inner Friction Sheet	6	ZKB75-303-004	
05	External Friction Sheet	6	ZKB75-303-003	
06	Circle *Φ*72	1	GB893.2-86	
07	Bearing 6306	1	GB/T276-94	
08	Brake Box Gasket	1	ZKB65-306-010	
09	Brake Box Cover	1	ZKB65-306-009	
10	Gasket 10	6	GB97.1-85	
11	Gasket 10	6	GB93-87	
12	Bolt M10*35-8.8	6	GB5783-86	
13	Shaft Housing Gasket	1	ZKB40-305-009	
14	Oil Sealfb45×65×8	1	GB13871-92	
15	Half Shaft Right Arm	1	ZKB65-205-600BGL	
16	Hexagon Flange Bolt M 12*35	6	GB/T5789-86	
17	Left Shaft	1	ZKB65-305a-002BG	
18	Bearing 6310-Rs	1	GB/T276-94	
19	Skeleton Type Oil Seal	1	MC60×90×18	
20	Sleeve	1	ZKB65-305-003a	
21	O Seal Φ50*2.65	2	GB3452.1-92	
22	Brake Box Gasket	1	ZKB65-12-01L	
23	Gasket Of Half Shaft	1	ZKB65-12-14LK	
24	Gasket 8	6	GB93-87	
25	Hexagon Flange Bolt M8×20-8.8S	6	GB5783-86	
26	Sleeve	1	ZKB65-305-008	
27	Gasket 20	1	GB/T7244	
28	Boltm20×1.5×45	1	GB5786-2000	
29	Circle *Φ*42	1	GB894.1-86	
30	Drive Gear	1	ZKB80-305a-004	
31	Bearing6309	1	GB/T276-94	
32	Gas Plug（M12×1.25）	1	ZKB40-305-018a	
33	Copper Washer	1	D12-37145	

Gearbox Assy（Shift Fork Assy）W3.5H-03A-02-05-00

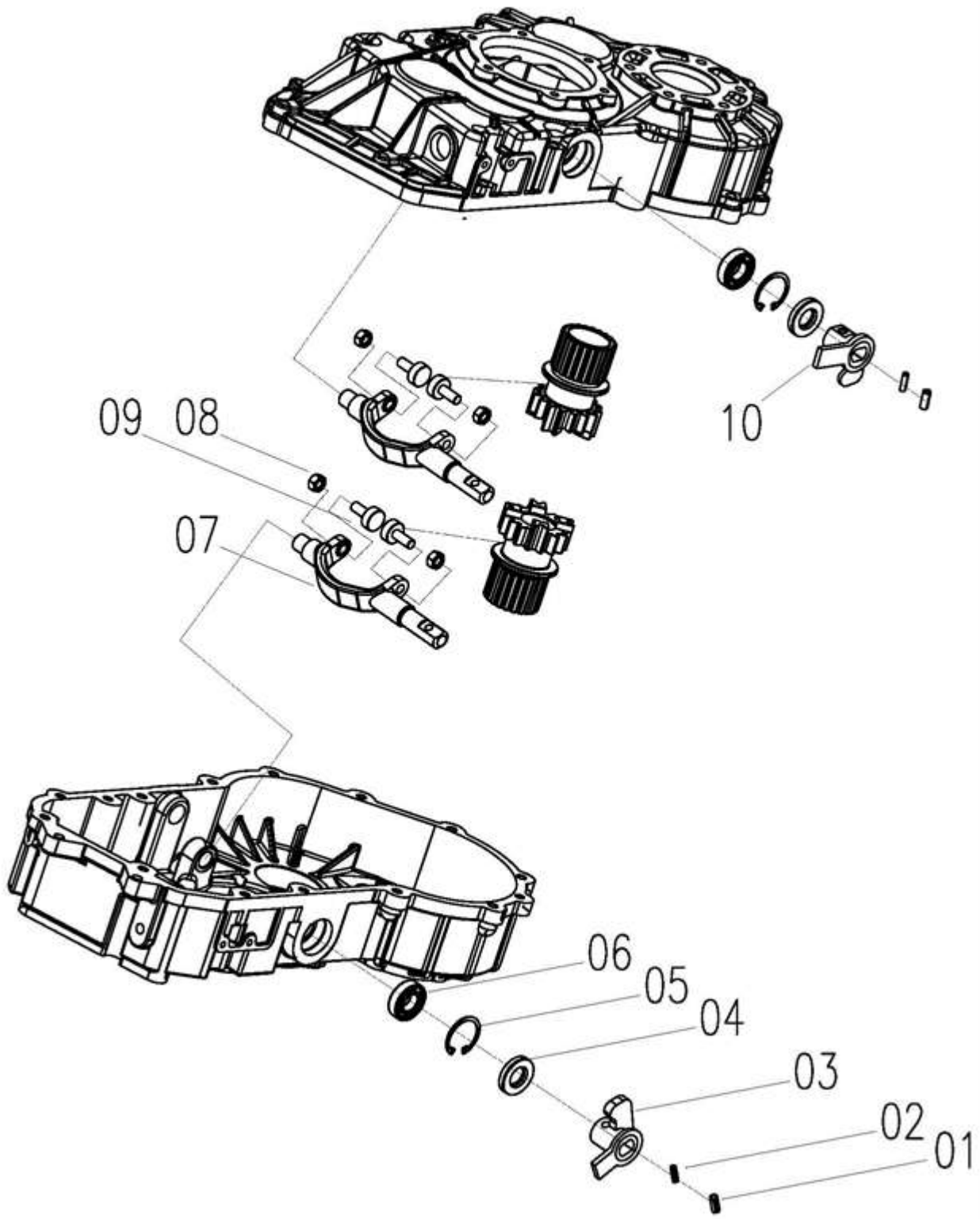

Gearbox Assy（Shift Fork Assy）W3.5H-03A-02-05-00				
No.	**Description**	**Qty**	**Part Code**	**Remark**
01	Elastic Cylindrical Pin 8 × 30	2	GB/T879-1986	
02	Elastic Cylindrical Pin 5 × 30	2	GB/T879-1986	
03	Right Rock Assy	1	ZKB40-206a-401-2-00S	
04	Oil Seal FB42 × 20 × 10	2	GB13871-92	
05	Circle Φ42	2	GB893.2-86	
06	Rolling Bearing 6004	2	GB/T276-94	P6C3
07	Single-Chip Wet Friction Fork	2	ZKB65-206-400-1-01L	
08	2# Hexagon Nut M10*1.25	4	GB/T6185.2-2000	
09	Bearing KRV22	4	GB/T6445.1-1996	
10	Left Rock Assy	1	ZKB40-206a-401-1-00S	

Gearbox Assy (Housing Of Gearbox Assy) W3.5H-03A-02-05-00

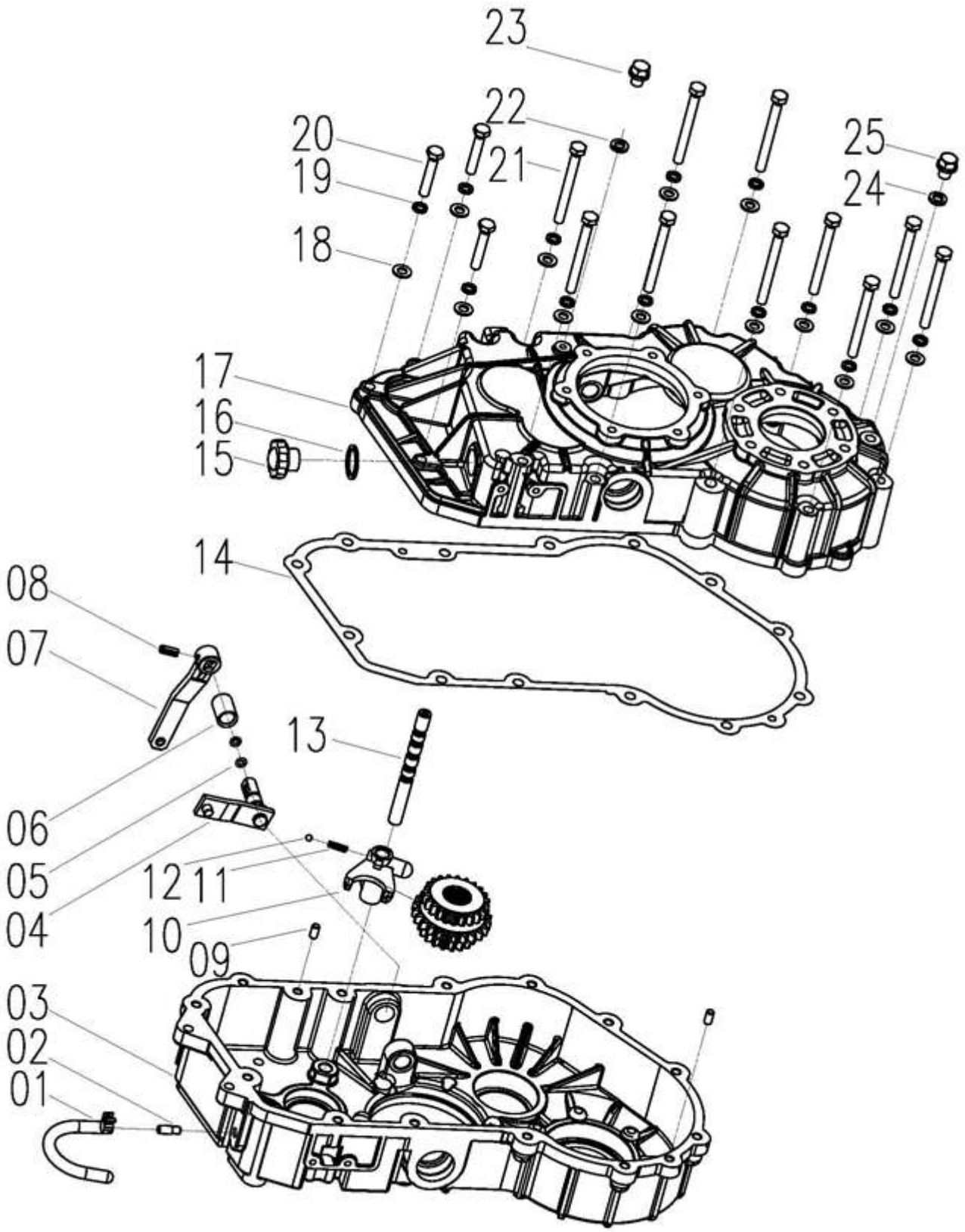

Gearbox Assy (Housing Of Gearbox Assy) W3.5H-03A-02-05-00				
No.	**Description**	**Qty**	**Part Code**	**Remark**
01	Air Hose Φ8*200	1	ZKB40.5T-305-008	
02	Ventilation Pipe Joint	1	ZKB40.5T-306-008	
03	Right Housing Of Gearbox	1	ZKB85-306-002J	
04	Speed-Shifting Shaft	1	ZKB65-106-500-1a	
05	O Seal Φ11.8*，Φ2.65	2	GB3452.1-82	
06	Shaft Sleeve	1	ZKB40-106-500-02	
07	Auxiliary Speed-Shifting Fork Rocker	1	ZKB40-106-500-2b	
08	Elastic Cylindrical Pin 6 × 25	1	GB/T879-1986	
09	Cylindrical Pin D8 × 18	2	GB119-86	
10	Gear Shift Fork	1	ZKB60-106-500-01	
11	Side Shifting Fork Spring	1	ZKB40-106-500-03b	
12	Iron Ball 8	1	GB308-77	
13	Gear Shifter Shaft	1	ZKB85-106-500-04	
14	Housing Plate	1	ZKB65-306-003	
15	Gas Plug (M12*1.25)	1	D12-37116	
16	Gasket24	1	D12-37115	
17	Left Housing Of Gearbox	1	ZKB85-306-001J	
18	Gasket 10	13	GB97.1-85	
19	Spring Washer 10	13	GB93-87	
20	Hexagon Head Bolt M10×55	3	GB5783-86	
21	Hexagon Socket Head Cap Screw M10×65	10	GB5782-86	
22	Copper Washer 10	1	ZKB40-04	
23	Plug M10×1	1	ZKB40-03	
24	Copper Washer	1	D12-37145	
25	Plug M12×1.25	1	ZKB40-05	

Gearbox Assy（Inside Of The Housing）W3.5H-03A-02-05-00

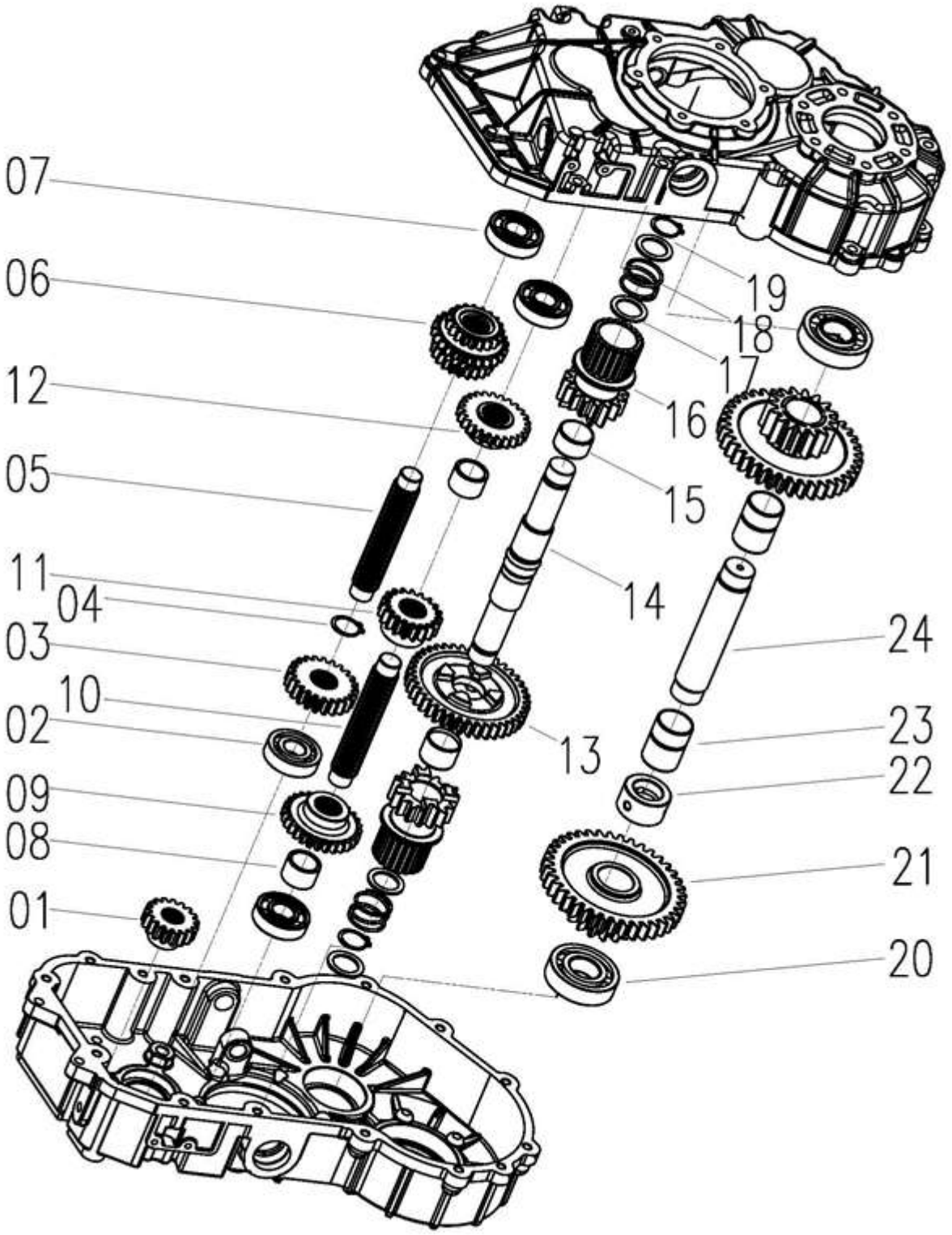

Gearbox Assy（Inside Of The Housing）W3.5H-03A-02-05-00				
No.	**Description**	**Qty**	**Part Code**	**Remark**
01	Gear（17×3.25）	1	ZKB85-307a-001	
02	Cylindrical Roller Bearing NJ305E	1	NSK	
03	Header Gear（23×3.25）	1	ZKB85-301a-002	
04	Circle 30	3	GB894.1-86	
05	Header Shaft	1	ZKB85-301-001	
06	Speed-Shifting Gear	1	ZKB85-301a-003	
07	Bearing 6305	3	0814106305(6305)	
08	Bearing	1	ZKB60-302-005	
09	Gear Ⅰ（28）	1	ZKB85-302a-002	
10	Speed-Shifting Shaft	1	ZKB85-302-001	
11	Gear Ⅲ（19×3.25）	1	ZKB60-302a-004	
12	Gear Ⅱ（25）	1	ZKB85-302a-003	
13	Steering Clutch Gear	1	ZKB85-203a-100-2	
14	Steering Clutch Shaft	1	ZKB85-203-100-1	
15	Sleeve	2	ZKB80-303-012	
16	Steering Clutch Gear	2	ZKB80-303b-002	
17	Inner Shaft Ring	2	ZKB80-303-006	
18	Spring	2	ZKB80-009	
19	External Shaft Ring	2	ZKB80-303-005	
20	Cylindrical Roller Bearing NJ2207E	2	GB/T283-94	
21	Steering Clutch Spline Gear	2	ZKB80-304a-002	
22	Shaft Sleeve	1	ZKB80-304-004	
23	Copper Bearing	2	ZKB80-304-005	
24	Idle Shaft	1	ZKB80-304-001	

Gearbox Assy（Right Housing Assy）W3.5H-03A-02-05-00

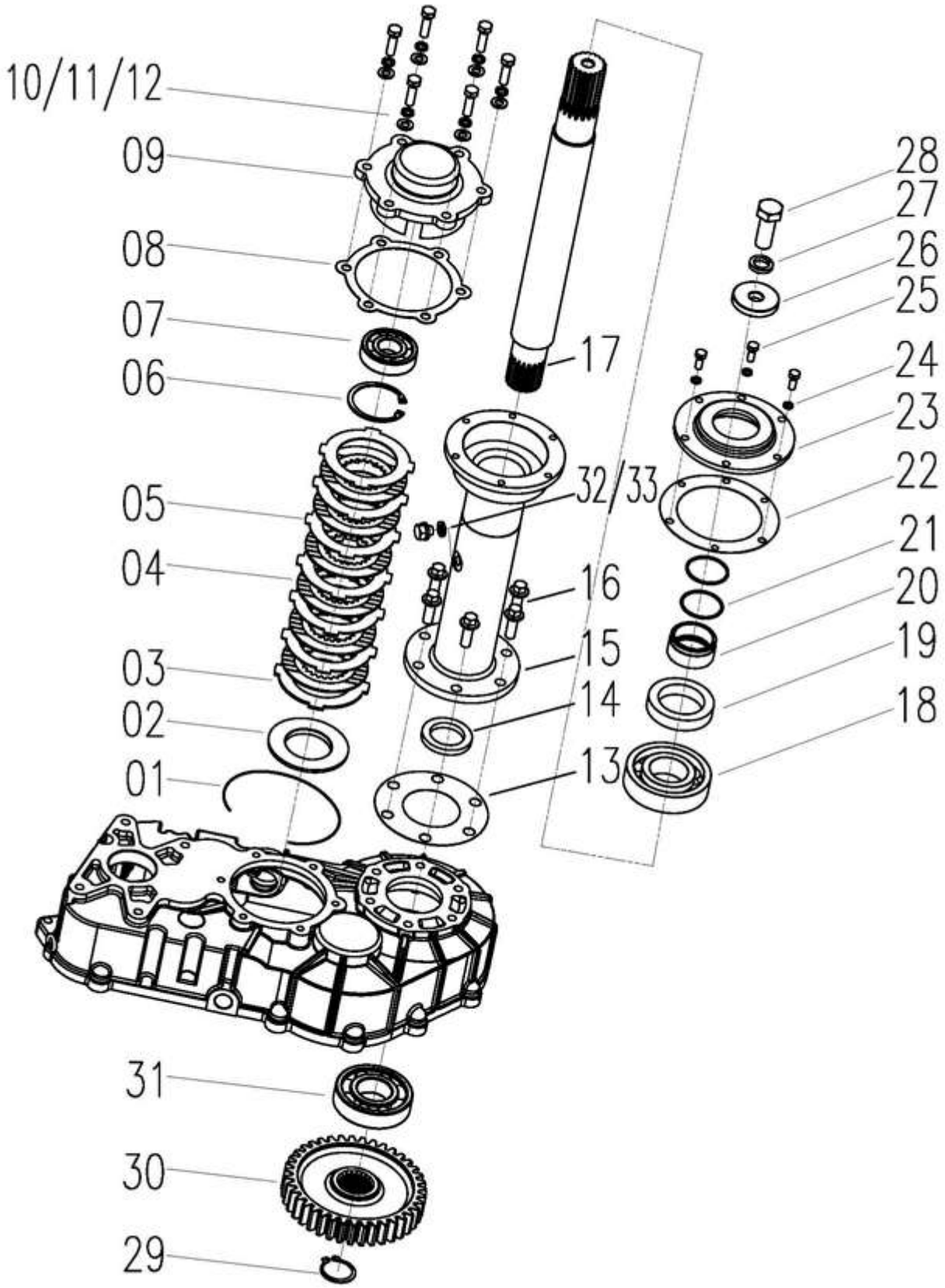

Gearbox Assy（Right Housing Assy）W3.5H-03A-02-05-00				
No.	**Description**	**Qty**	**Part Code**	**Remark**
01	Clasp	1	ZKB65-303-010a	
02	Thrust Collar	1	ZKB80-303-007a	
03	Pressure Plate	1	ZKB75-303-009	
04	Inner Friction Sheet	8	ZKB80-303-004a	
05	External Friction Sheet	8	ZKB75-303-003	
06	Circle Φ80	1	GB893.2-86	
07	Bearing 6307	1	0814106307（6307）	
08	Brake Box Gasket	1	ZKB65-306-010	
09	Brake Box Cover	1	ZKB80-306-009a	
10	Gasket 10	6	GB97.1-85	
11	Gasket 10	6	GB93-87	
12	Bolt M10*35-8.8	6	GB5783-86	
13	Shaft Housing Gasket	1	ZKB80-305-009	
14	Oil Sealfb55×75×10	1	GB13871-92	
15	Half Shaft Right Arm	1	ZKB65a-W3.5H-205-600B1G1	
16	Hexagon Flange Bolt M 12*35	6	GB/T5789-86	
17	Right Shaft	1	ZKB65-W3.5H-305-002	
18	Bearing 6310-Rs	1	0814106310（6310）	P6C3
19	Skeleton Type Oil Seal	1	MC60×90×18	
20	Sleeve	1	ZKB85-305-003a	
21	O Seal Φ50*2.65	2	GB3452.1-92	
22	Brake Box Gasket	1	ZKB65-12-01L	
23	Gasket Of Half Shaft	1	ZKB65-12-14LK	
24	Gasket 8	6	GB93-87	
25	Hexagon Flange Bolt M8×20-8.8S	6	GB5783-86	
26	Sleeve	1	ZKB65-305-008	
27	Gasket 20	1	GB/T7244	
28	Boltm20×1.5×45	1	GB5786-2000	
29	Circle Φ42	1	GB894.1-86	
30	Drive Gear	1	ZKB80-305a-004	
31	Bearing5211	1	NSK5211	P6C3
32	Gas Plug（M12×1.25）	1	ZKB40-305-018a	
33	Copper Washer 12	1	D12-37145	

Gearbox Assy（Left Housing Assy）W3.5H-03A-02-05-00

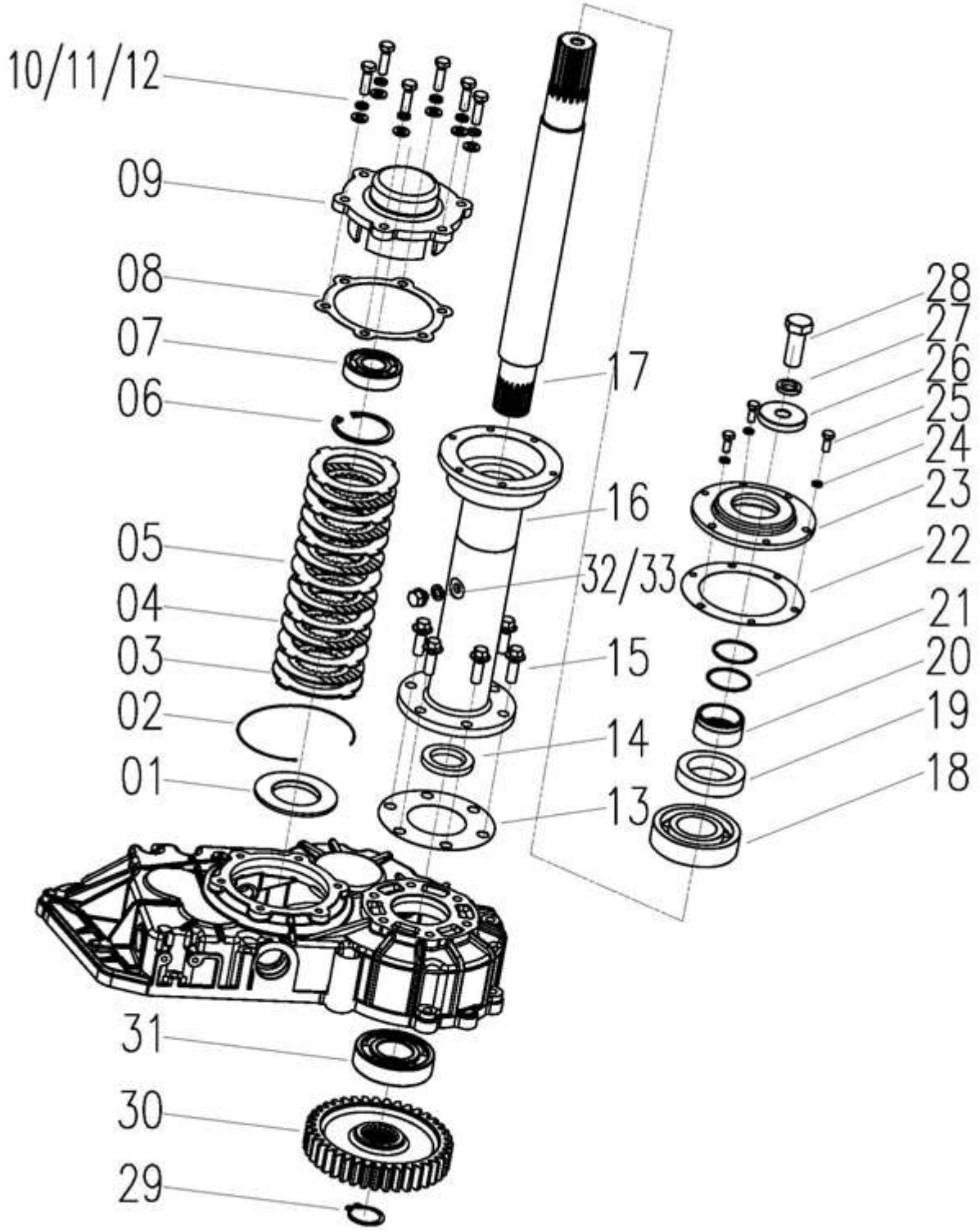

Gearbox Assy（Left Housing Assy）W3.5H-03A-02-05-00				
No.	**Description**	**Qty**	**Part Code**	**Remark**
01	Clasp	1	ZKB65-303-010a	
02	Thrust Collar	1	ZKB80-303-007a	
03	Pressure Plate	1	ZKB75-303-009	
04	Inner Friction Sheet	8	ZKB80-303-004a	
05	External Friction Sheet	8	ZKB75-303-003	
06	Circle Φ80	1	GB893.2-86	
07	Bearing 6307	1	0814106307（6307）	P6C3
08	Brake Box Gasket	1	ZKB65-306-010	
09	Brake Box Cover	1	ZKB80-306-009a	
10	Gasket 10	6	GB97.1-85	
11	Gasket 10	6	GB93-87	
12	Bolt M10*35-8.8	6	GB5783-86	
13	Shaft Housing Gasket	1	ZKB80-305-009	
14	Oil Sealfb55×75×10	1	GB13871-92	
15	Half Shaft Right Arm	1	ZKB65a-W3.5H-205-500BG	
16	Hexagon Flange Bolt M 12*35	6	GB/T5789-86	
17	Left Shaft	1	ZKB65-W3.5H-305-001	
18	Bearing 6310-Rs	1	0814106310（6310）	
19	Skeleton Type Oil Seal	1	MC60×90×18	
20	Sleeve	1	ZKB65-305-003a	
21	O Seal Φ50*2.65	2	GB3452.1-92	
22	Brake Box Gasket	1	ZKB65-12-01L	
23	Gasket Of Half Shaft	1	ZKB65-12-14LK	
24	Gasket 8	6	GB93-87	
25	Hexagon Flange Bolt M8×20-8.8S	6	GB5783-86	
26	Sleeve	1	ZKB65-305-008	
27	Gasket 20	1	GB/T7244	
28	Boltm20×1.5×45	1	GB5786-2000	
29	Circle Φ52	1	GB894.1-86	
30	Drive Gear	1	ZKB80-305a-004	
31	Bearing5211	1	NSK5211	P6C3
32	Gas Plug（M12×1.25）	1	ZKB40-305-018a	
33	Copper Washer	1	D12-37145	

HST Assy W2.0-03(R)-03A-00

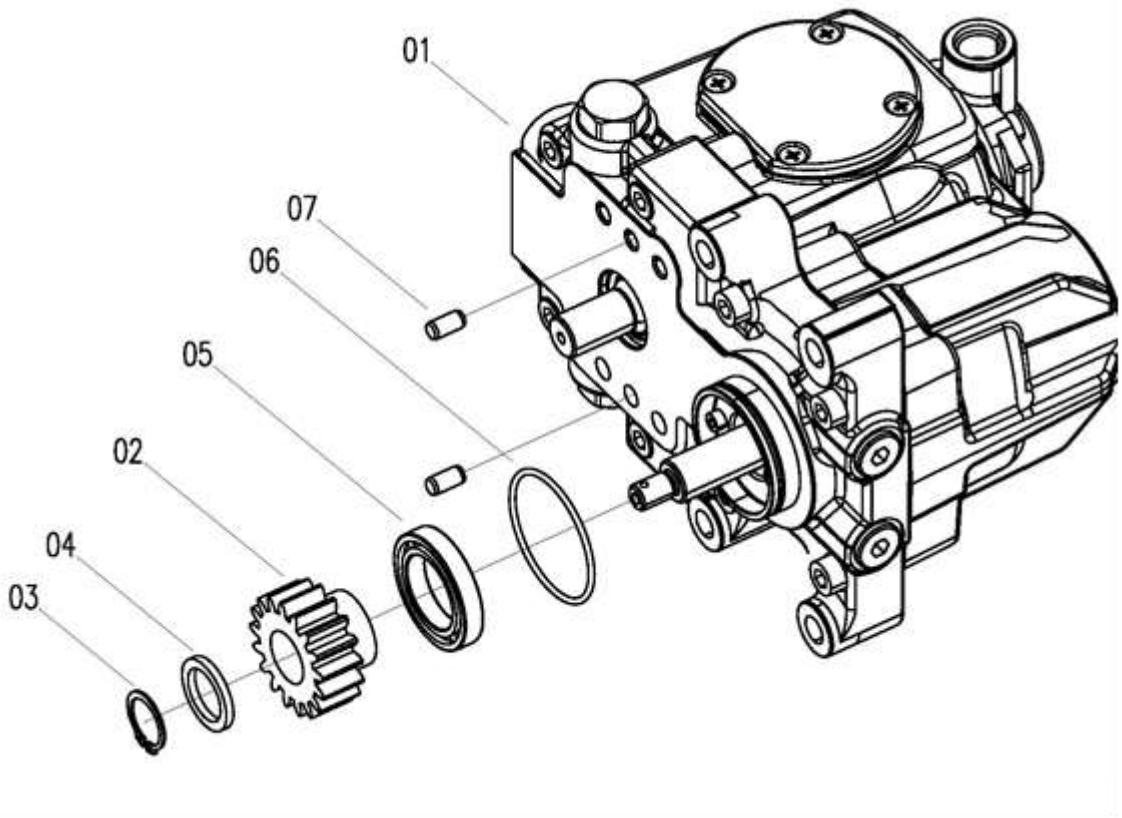

No.	Description	Qty	Part Code	Remark
01	HST Pump	1	W2.0-03(R)-03-01-00	40cc
02	Gear (17 Teeth)	1	ZKB65-307-001	Use with 6007 bearing
03	Retaining Ring 24	1	GB/T894.1	
04	Washer	1	W2.0-03(R)-03-03A	
05	HST Bearing 6007	1	W2.0-03(R)-03A-04	Imported Bearing
06	Universal O-Ring 58 × 1.8	1	GB/T3452.1	
07	Pin 8X16	2	GB/T119.1	

HST Assy W2.0-03(R)-03-00

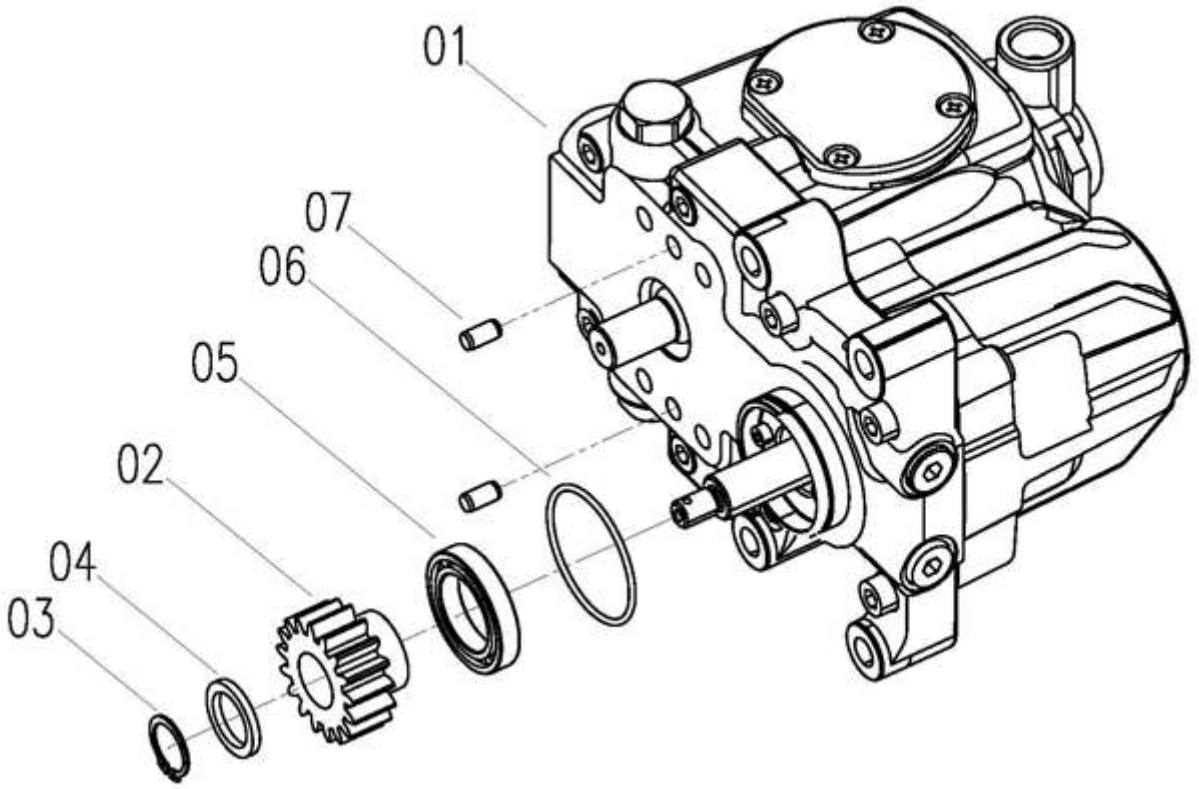

No.	Description	Qty	Part Code	Remark
01	HST Pump	1	W2.0-03(R)-03B-01-00	45 cc
02	Gear (17 Teeth)	1	ZKB80-307-001	
03	Retaining Ring 24	1	GB/T894.1	
04	Washer	1	W2.0-03(R)-03-03A	
05	HST Bearing 6007	1	W2.0-03(R)-03A-04	
06	Universal O-Ring 58 × 1.8	1	GB/T3452.1-92	
07	Pin 8X16	2	GB/T119.1-2000	

HST Connection W2.5DA-03H-10-00

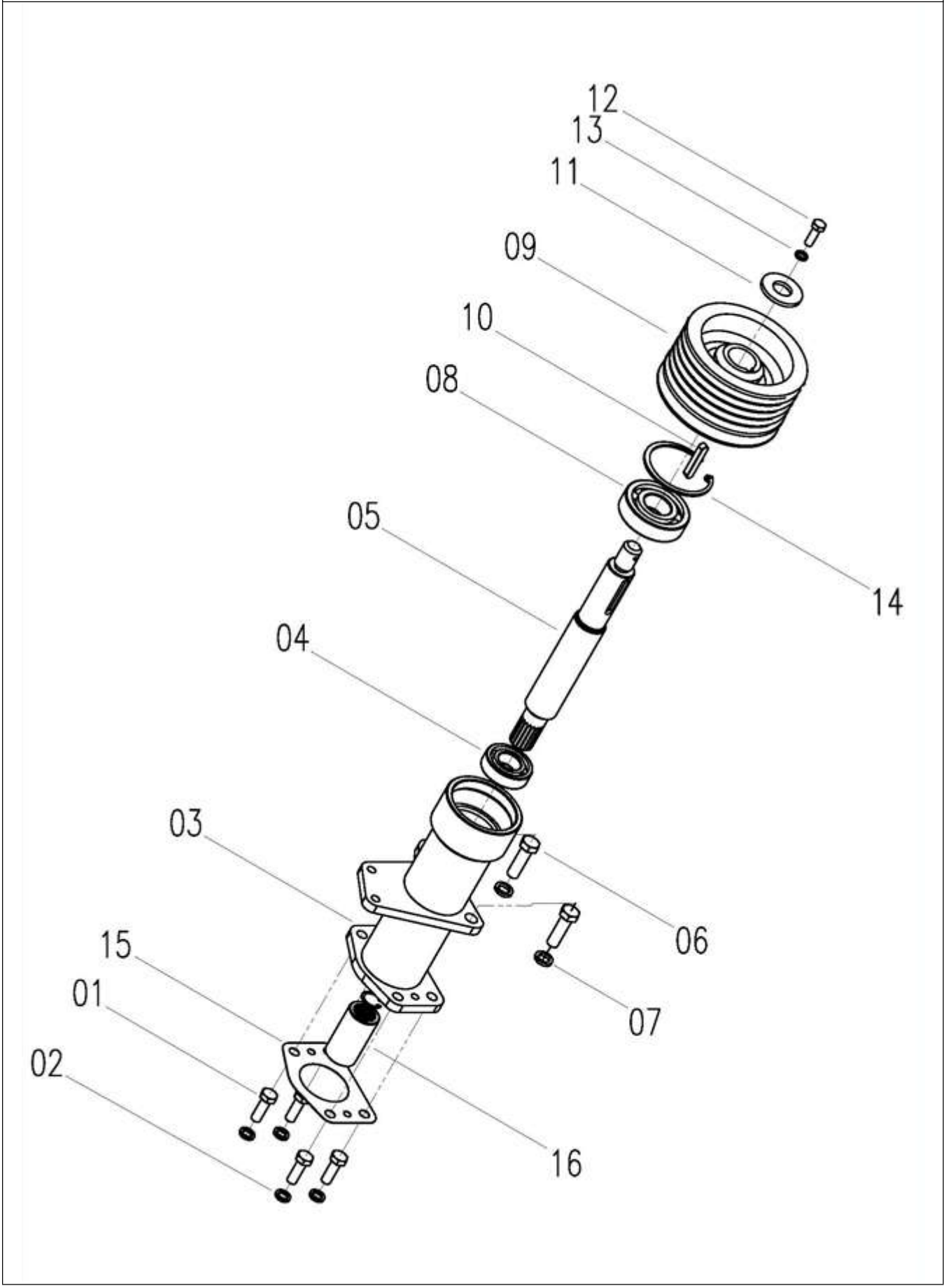

HST Connection W2.5DA-03H-10-00				
No.	**Description**	**Qty**	**Part Code**	**Remark**
01	Bolt M10 × 30	4	GB/T5783	
02	Washer 10	4	GB/T93	
03	Flange	1	W2.5C-03D-10-04	
04	HST Bearing 6205-RS	1	W2.0-03-10A-17	
05	Spline Shaft	1	W2.5C-03D-10-05	
06	Bolt M12 × 40	2	GB/T5783	
07	Washer 12	2	GB/T93	
08	HST Bearing 6306-RS	1	W2.5D-03-10-12	
09	Belt Pulley	1	W2.5C-03D-10-06	
10	Key A 8 × 45	1	GB/T1096	
11	Washer, Plain	1	W2.5C-03D-10-07	
12	Bolt M8 × 20	1	GB/T5783	
13	Washer 8	1	GB/T93	
14	Retaining Ring 72	1	GB/T893.1	
15	Paper Gasket	1	W2.0-03(R)-10-12	
16	Spline Sleeve Assy	1	W2.5DA-03H-10-02-00	

HST Connection W2.5DA-03H-10D-00

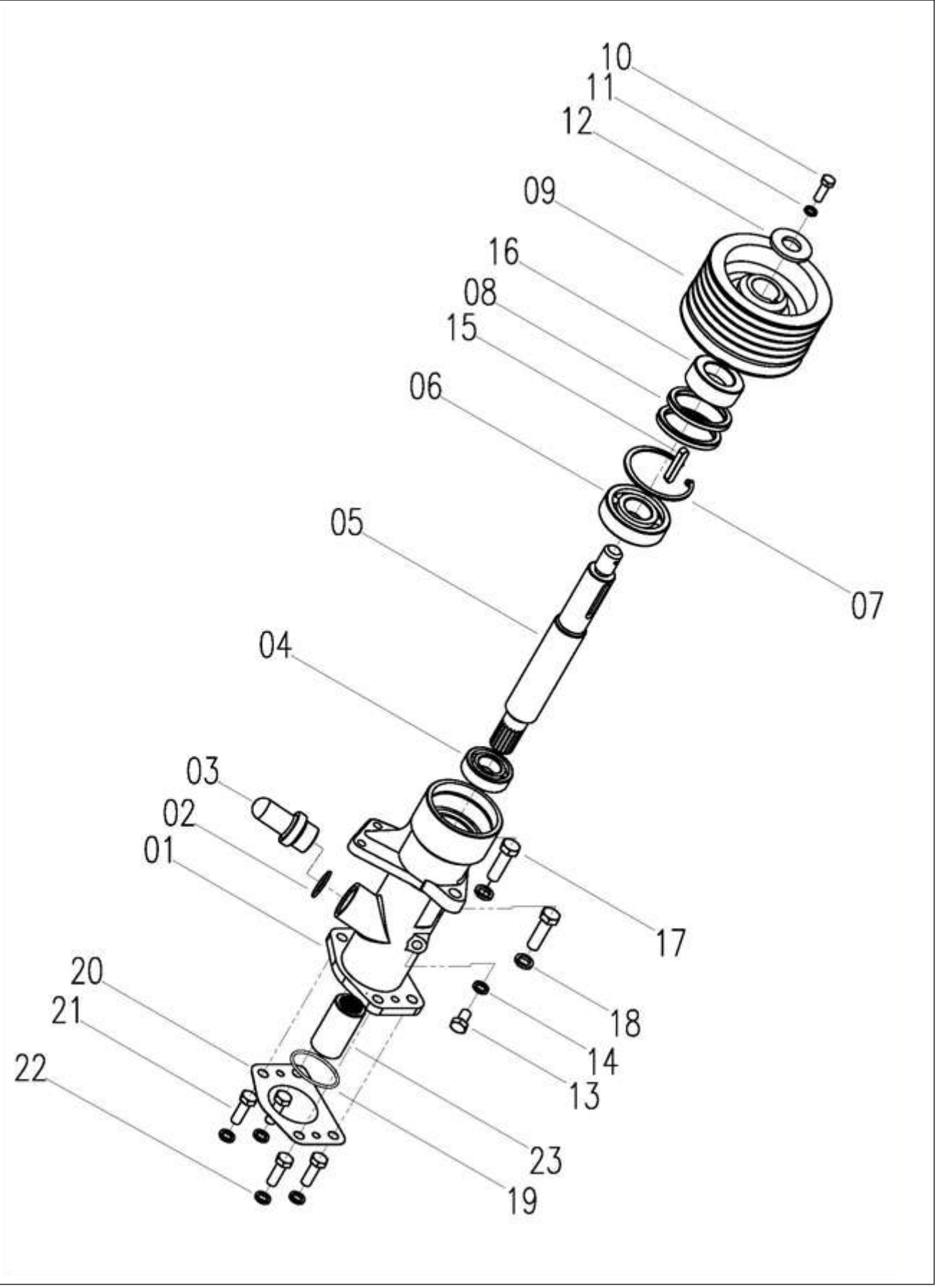

HST Connection W2.5DA-03H-10D-00				
No.	**Description**	**Qty**	**Part Code**	**Remark**
01	Flange	1	W2.5DA-03H-10D-04	
02	O-Ring 30X2.65	3	GB/T3452.1	
03	Breathable Plug	1	WD-150-06-13-05-00	
04	HST Bearing 6205	1	W2.5DA-03H-10D-17	Imported bearing
05	Spline Shaft	1	W2.5DA-03H-10D-05	
06	HST Bearing 6306-RS	1	W2.5D-03-10-12	
07	Circlip For Hole 72	1	GB/T893.1	
08	Oil Seal (F) B72X50X8	2	GB/T13871.1	Imported Oil Seal
09	Belt Pulley	1	W2.5C-03D-10-06	
10	Bolt M8 × 20	1	GB/T5783	
11	Washer 8	1	GB/T93	
12	Washer, Plain	1	W2.5C-03D-10-07	
13	Plug M10 × 1	1	ZKB40-03	
14	Gasket 10	1	JB/982-77	
15	Key 8 × 45	1	GB/T1096	
16	Spacer	1	W2.5DA-03H-10D-03	
17	Bolt M12 × 40	2	GB/T5783	
18	Washer 12	2	GB/93	
19	O-Ring 47.5X2.65	1	GB/T3452.1	
20	Paper Gasket	1	W2.0-03(R)-10-12	
21	Bolt M10 × 30	4	GB/T5783	
22	Washer 10	4	GB/T93	
23	Flange	1	W2.5DA-03H-10-02-00	

Tension Wheel Assy W5.0-03X-27-00

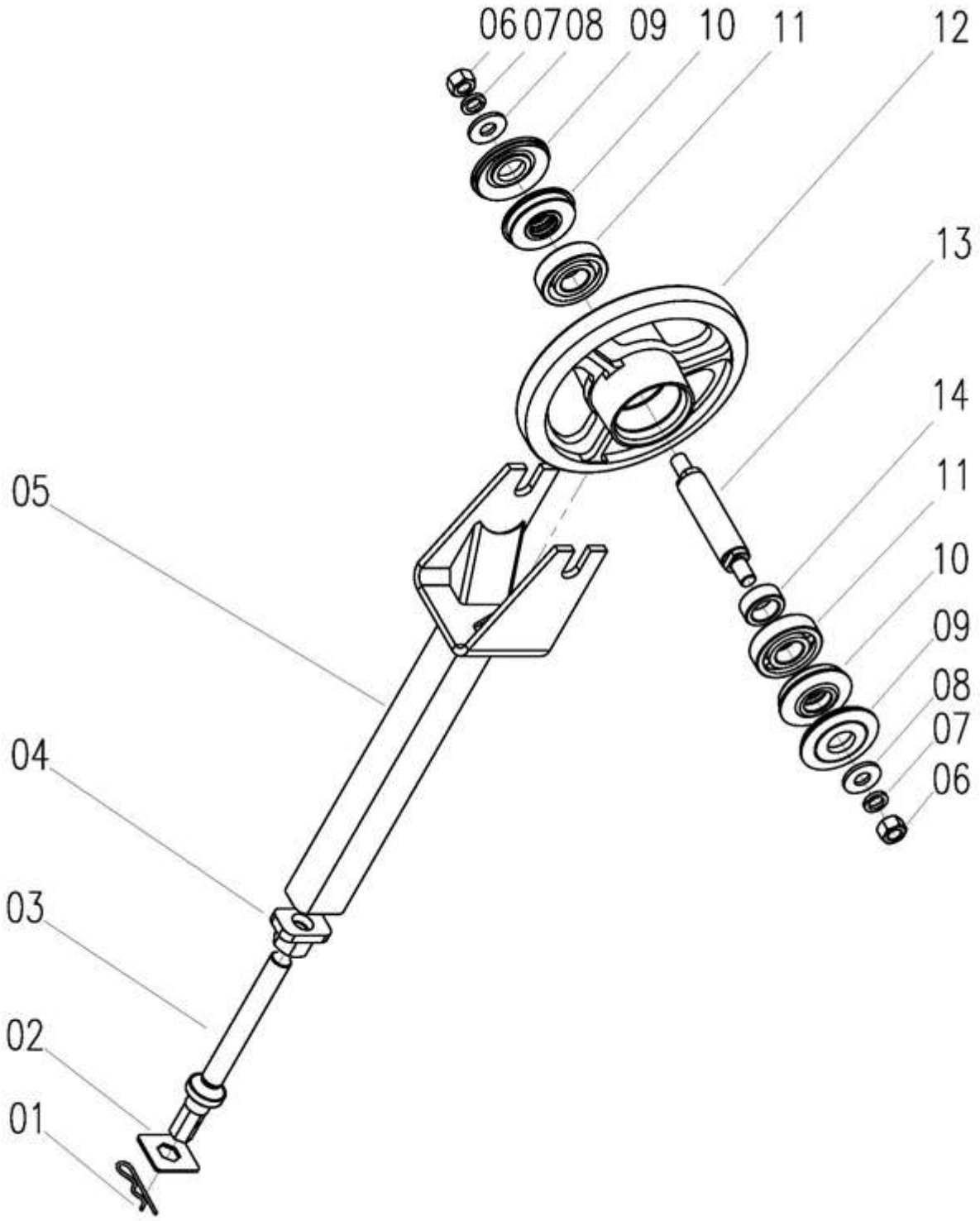

Tension Wheel Assy W5.0-03X-27-00				
No.	**Description**	**Qty**	**Part Code**	**Remark**
01	Spring Pin	1	W2.5DA-03H-27-10	
02	Limit Plate	1	WD.4FE.27-04	
03	Adjusting Screw	1	WD.4FE.27-03	
04	Limit Plate Weld	1	WD.4FE.27.1	
05	Tension Frame Weld	1	W5.0-03X-27-02-00	
06	Nut M16	2	GB/T6170	
07	Washer 16	2	GB/T93	
08	Retaining Ring	2	L18X.4.27-04	
09	Cover	2	L18X.4.29-02	
10	Oil Seal Combination	2	W2.5DA-03H-27-06-00B	
11	Bearing 6306-RS / P63	2	W2.5DA-03H-27-12	
12	Tension Wheel	1	WD.4MC.27-01	
13	Tension Shaft	1	W2.5DA-03B-27-08	
14	Spacer	1	L18X.4.27-03	

Pedal Assy W2.5DA-03H-16-00

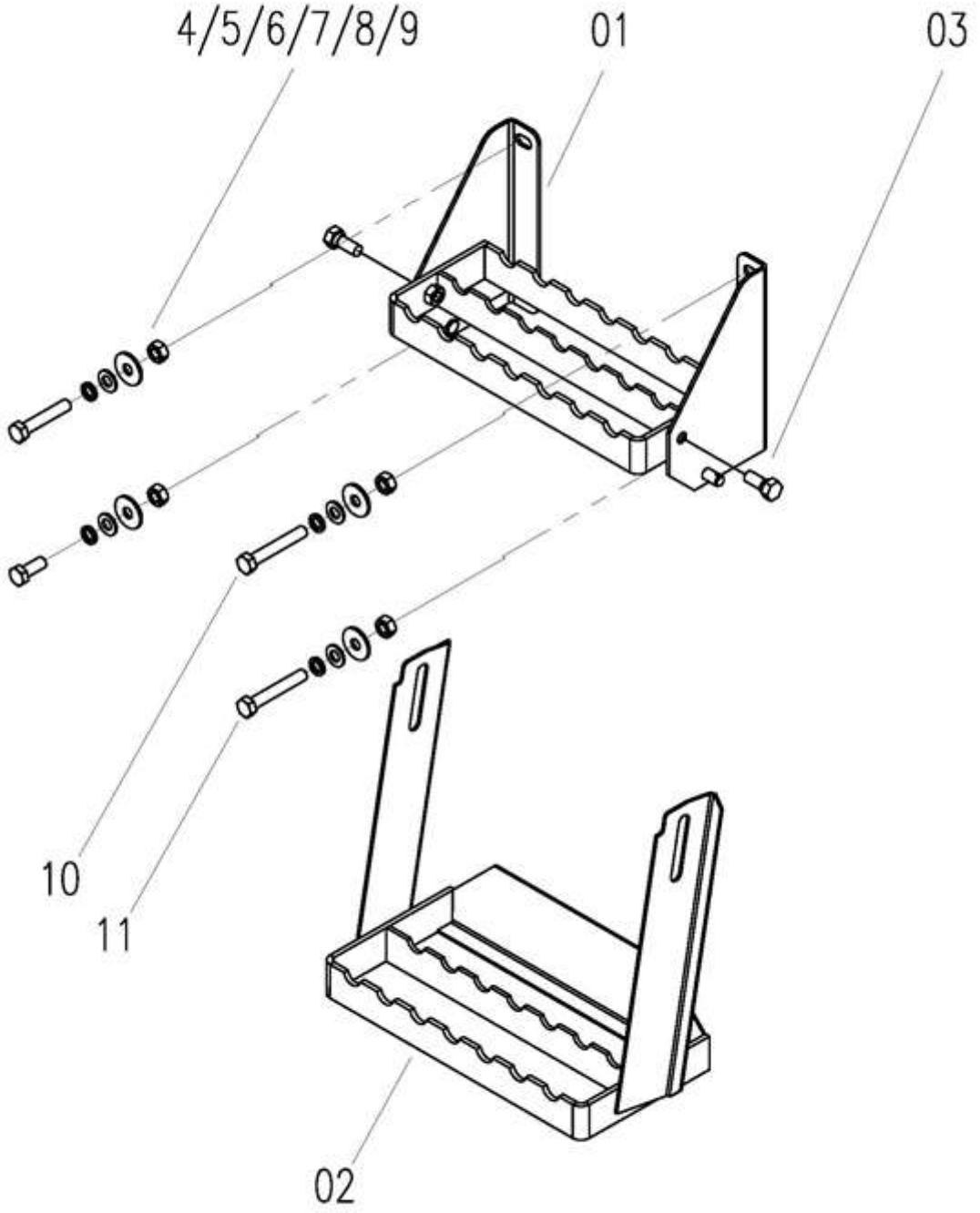

Pedal Assy W2.5DA-03H-16-00				
No.	**Description**	**Qty**	**Part Code**	**Remark**
01	Upper Pedal Weld	1	W2.5DA-03H-16-01-00	
02	Lower Pedal Weld	1	W2.5DA-03H-16-02-00	
03	Shaft, Rotating	2	W2.5DA-03H-16-03	
04	Bolt M10 × 25	4	GB/T5783-86	For sunroof type
05	Washer 10	4	GB/T97.1-85	
06	Spring Washer 10	4	GB/T93-87	
07	Bolt M10 × 25	1	GB/T5783-86	For cabin type
08	Washer, Big 10	4	GB/T96-85	For cabin type
09	Nut M10	4	GB/T6170-86	For cabin type
10	Bolt M10 × 55	1	GB/T5782-86	For cabin type
11	Bolt M10 × 65	2	GB/T5782-86	For cabin type

Working Tension Pulley W3.5H-03B-17-00

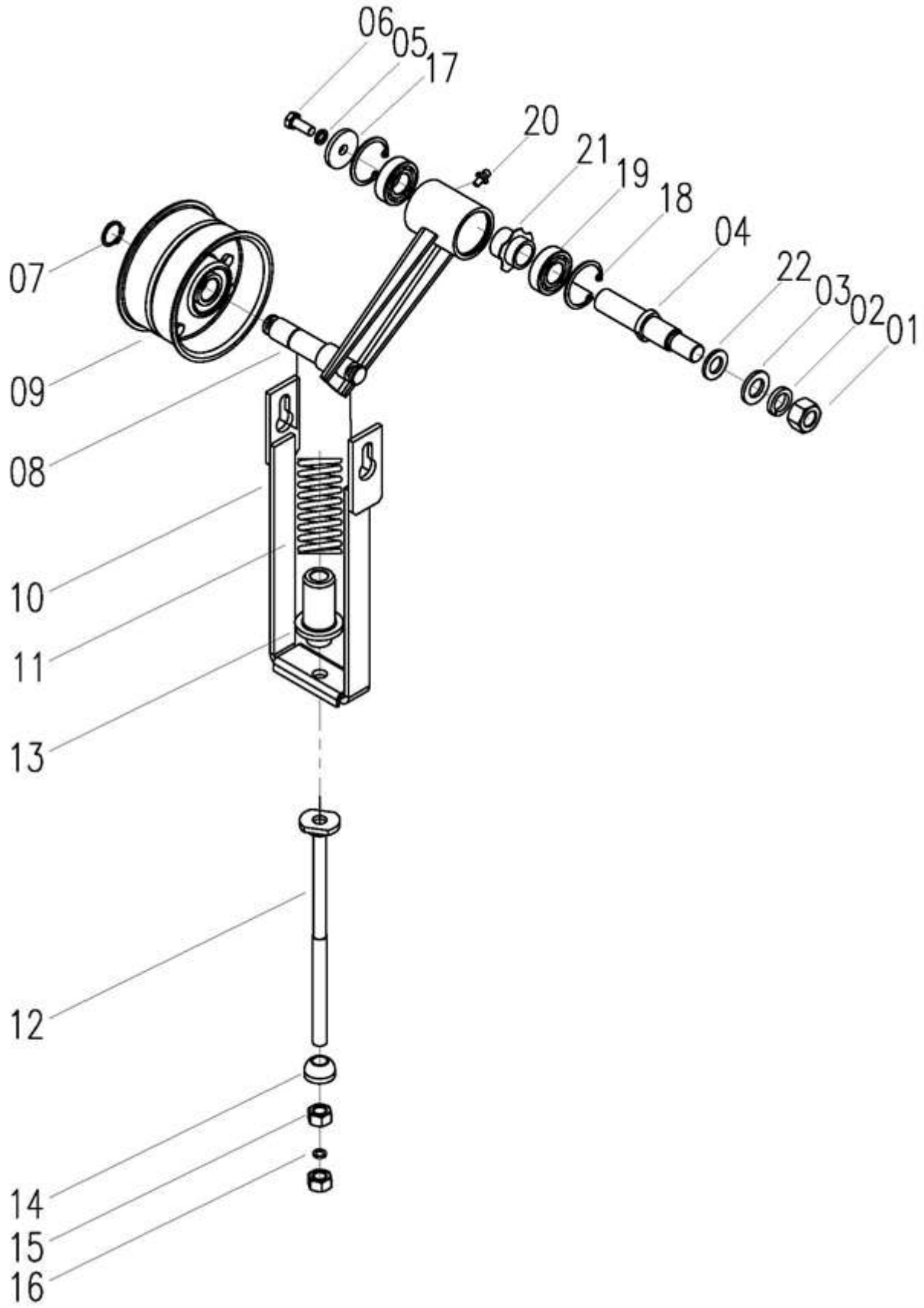

Working Tension Pulley W3.5H-03B-17-00				
No.	**Description**	**Qty**	**Part Code**	**Remark**
01	Nut M16	1	GB/T6170	
02	Washer 16	1	GB/T93	
03	Washer 16	1	GB/T97.1	
04	Tension Shaft	1	W2.5D-03-10-02	
05	Washer 8	1	GB/T93	
06	Bolt M8×20	1	GB/T5783	
07	Retaining Ring For Shaft	1	GB/T894.1	
08	Tension Arm Weld	1	W3.5H-03B-17-01-00	
09	Tension Pulley Assy	1	W2.5K-02SA-09A-01A-00	
10	Plate Weld	1	W2.5DA-03H-17C-08-00	
11	Spring	1	W2.5DA-03H-17A-05A	
12	Rod Weld	1	W2.5DA-03H-17A-06-00	
13	Nylon Sleeve	1	W2.5DA-03H-17B-10	
14	Ball Seat	1	W2.5-03-10-03	
15	Nut M12	2	GB/T6170	
16	Washer 12	1	GB/T93	
17	Retaining Ring	1	W2.5DA-03H-17D-17	
18	Retaining Ring For Hole Φ42	2	GB/T893.1	
19	Bearing 6004-RS	2	GB/T276	
20	Oil Cup M6	1	GB/T1152	
21	Sleeve	1	W2.5DA-03H-17D-02-00	
22	Adjustment Gasket	On Demand	W2.5D-03-10-07	

Track Roller Assy W3.5H-03A-06-00

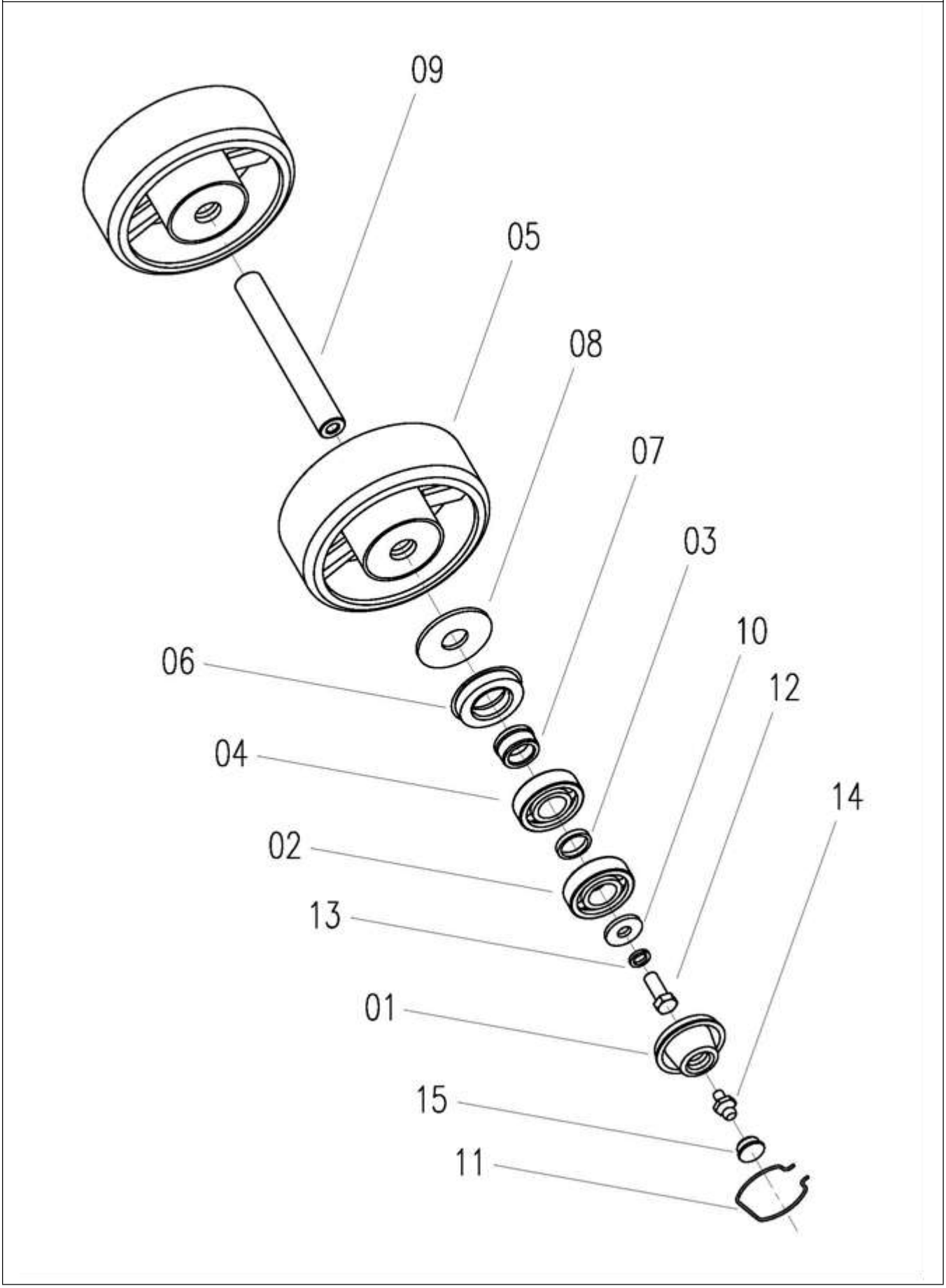

Track Roller Assy W3.5H-03A-06-00				
No.	**Description**	**Qty**	**Part Code**	**Remark**
01	Cover	2	W2.5DX-03C-06-03-00	
02	Bearing 6305-C3	2	W2.5DX-03C-06-12	Imported bearing
03	Spacer	2	W1.8-33-06-02	
04	Bearing 6305-RS/C3	2	W2.5DX-03C-06-02	Imported bearing
05	Support Roller Weld	2	W2.5DX-03C-06-01-00	
06	Oil Seal Assy	2	W1.8-33-06-04-00A	
07	Spacer	2	W2.5DX-03C-06-05-00	
08	Outer Cover	2	W2.5DX-03C-06-10	
09	Shaft	1	WD.4MC.32-06	
10	Special Washer	2	W1.8-33-06-07	
11	Wire Retaining Ring	2	W1.8-33-06-08	
12	Bolt M12 × 1.5 × 30	2	GB/T5786	
13	Washer 12	2	GB/T93	
14	Grease Fitting M6	2	JB/T7940.1	Stainless steel oil cup
15	Cover	2	W2.5DX-03C-06-11	

Balance Wheel Assy W3.5H-03A-07-00

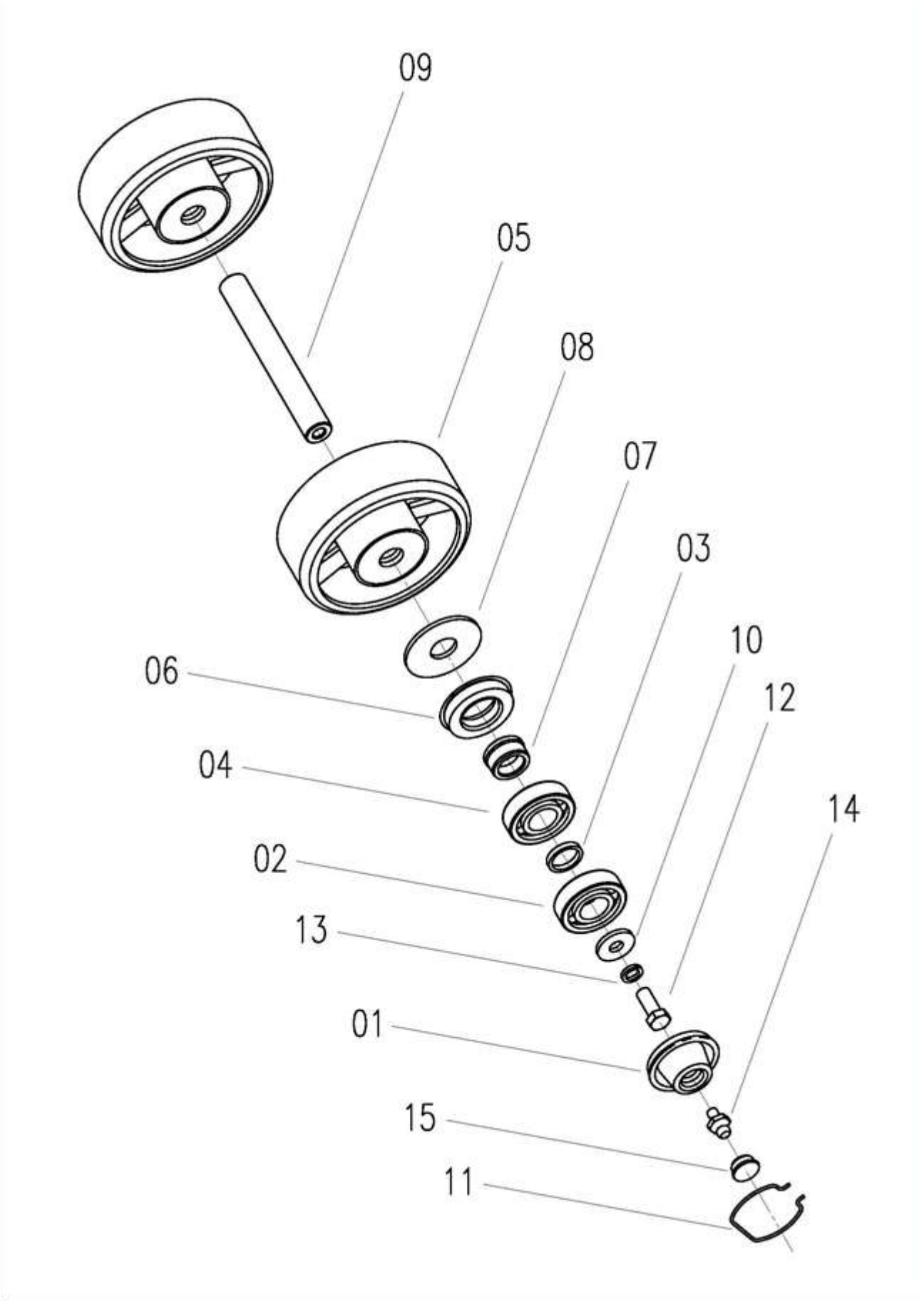

Balance Wheel Assy W3.5H-03A-07-00				
No.	**Description**	**Qty**	**Part Code**	**Remark**
01	Cover	2	W2.5DX-03C-06-03-00	
02	Bearing 6305-C3	2	W2.5DX-03C-06-12	
03	Spacer	2	W1.8-33-06-02	
04	Bearing 6305-RS/C3	2	W2.5DX-03C-06-02	Imported bearing
05	Support Roller Weld	2	W2.5DX-03C-07-01-00	
06	Oil Seal Assy	2	W1.8-33-06-04-00A	
07	Spacer	2	W2.5DX-03C-06-05-00	
08	Outer Cover	2	W2.5DX-03C-06-10	
09	Shaft	1	WD.4MC.32-06	
10	Special Washer	2	W1.8-33-06-07	
11	Wire Retaining Ring	2	W1.8-33-06-08	
12	Bolt M12 × 1.5 × 30	2	GB/T5786	
13	Washer 12	2	GB/T93	
14	Grease Fitting M6	2	JB/T7940.1	Stainless steel oil cup
15	Cover	2	W2.5DX-03C-06-11	

Roller Assy W3.5H-03A-28-00

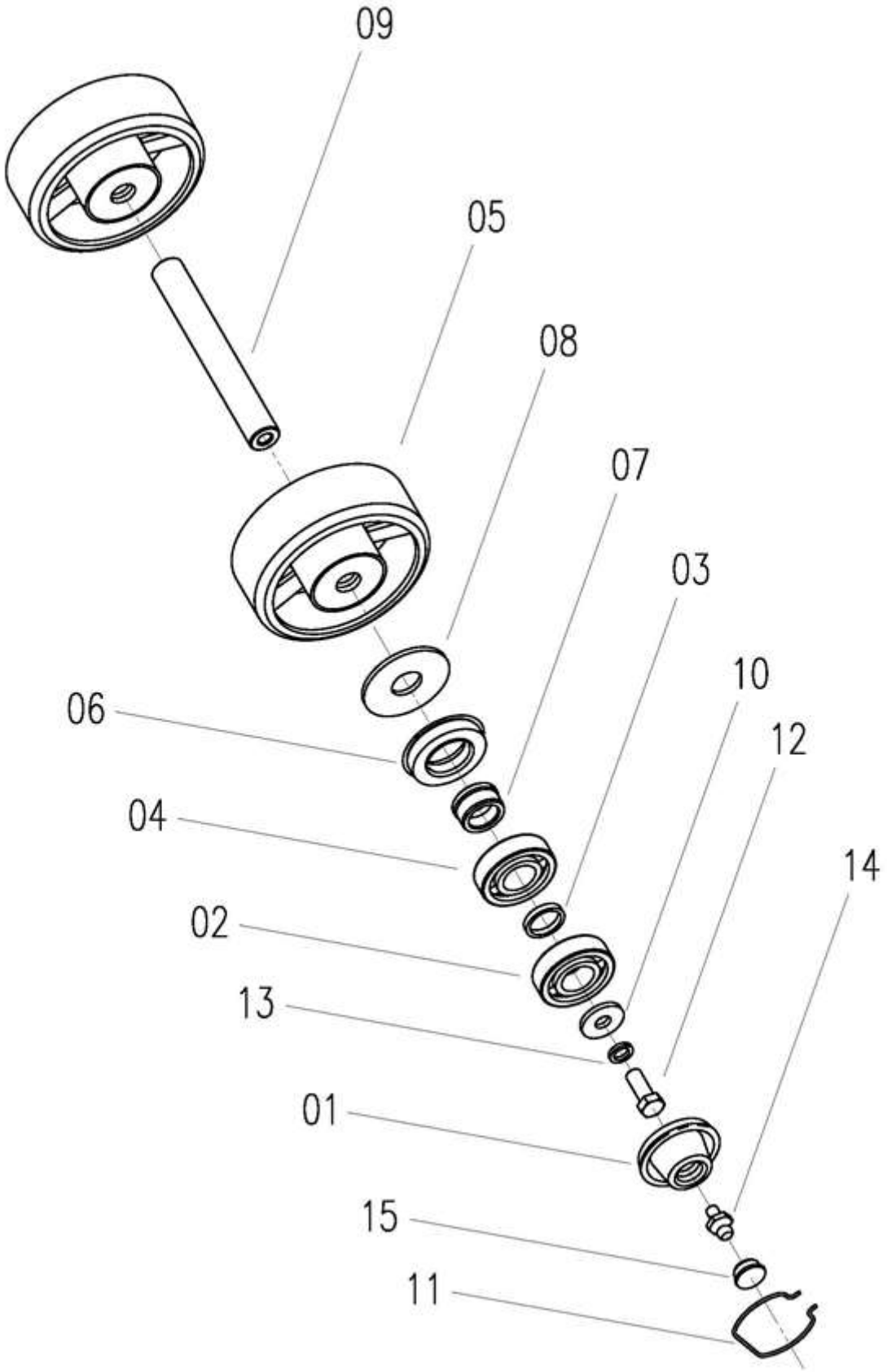

Roller Assy W3.5H-03A-28-00

No.	Description	Qty	Part Code	Remark
01	Cover	2	W2.5DX-03C-06-03-00	
02	Bearing 6305-C3	2	W2.5DX-03C-06-12	Imported Bearing
03	Spacer	2	W1.8-33-06-02	
04	Bearing 6305-RS/C3	2	W2.5DX-03C-06-02	Imported Bearing
05	Support Roller Weld	2	W3.5H-03A-28-01-00	
06	Oil Seal Assy	2	W1.8-33-06-04-00A	
07	Spacer	2	W2.5DX-03C-06-05-00	
08	Outer Cover	2	W2.5DX-03C-06-10	
09	Shaft	1	WD.4MC.32-06	
10	Special Washer	2	W1.8-33-06-07	
11	Wire Retaining Ring	2	W1.8-33-06-08	
12	Bolt M12 × 1.5 × 30	2	GB/T5786	
13	Washer 12	2	GB/T93	
14	Grease Fitting M6	2	JB/T7940.1	Stainless steel oil cup
15	Cover	2	W2.5DX-03C-06-11	

Wire Box Assy W2.5DA-03NA-08-00

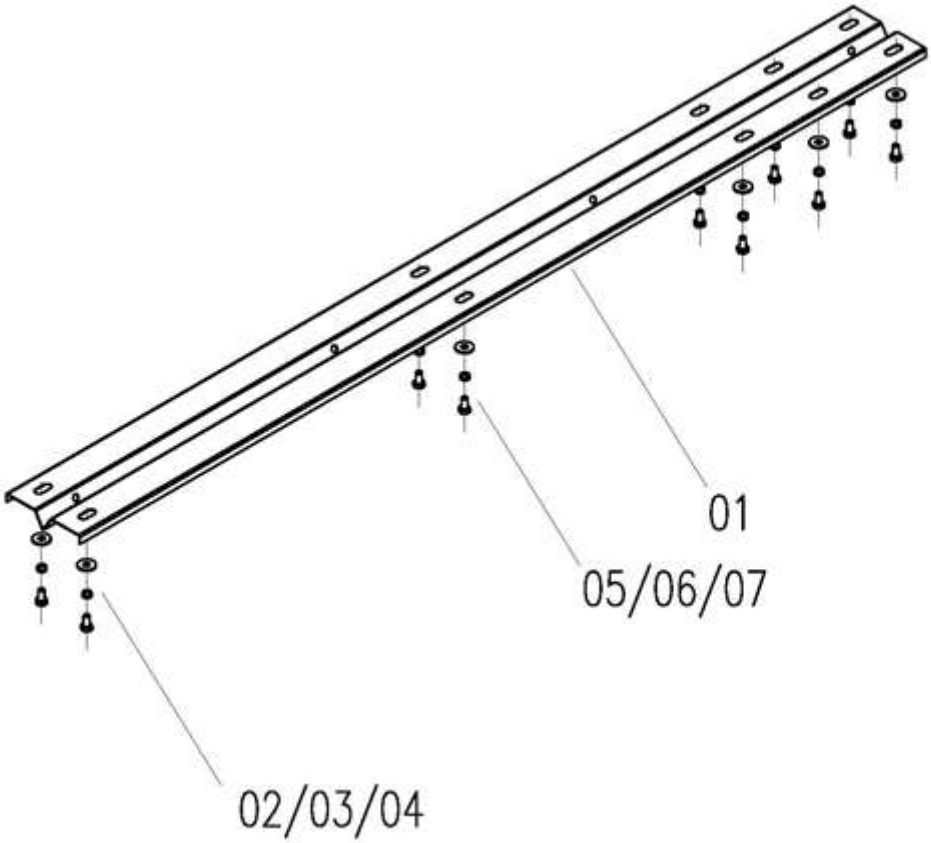

No.	Description	Qty	Part Code	Remark
01	Plate, Wire Box	1	W2.5DA-03NA-08-01	
02	Bolt M6X12	4	GB/T5783	
03	Washer 6	4	GB/T93	
04	Washer 6	4	GB/T96	
05	Bolt M6X12	2	GB/T5783	For 500*90*51 rubber track
06	Washer 6	2	GB/T93	For 500*90*51 rubber track
07	Washer 6	2	GB/T96	For 500*90*51 rubber track

Ⅳ. Grain Tank

Grain Tank Assy W2.5F-04D-00

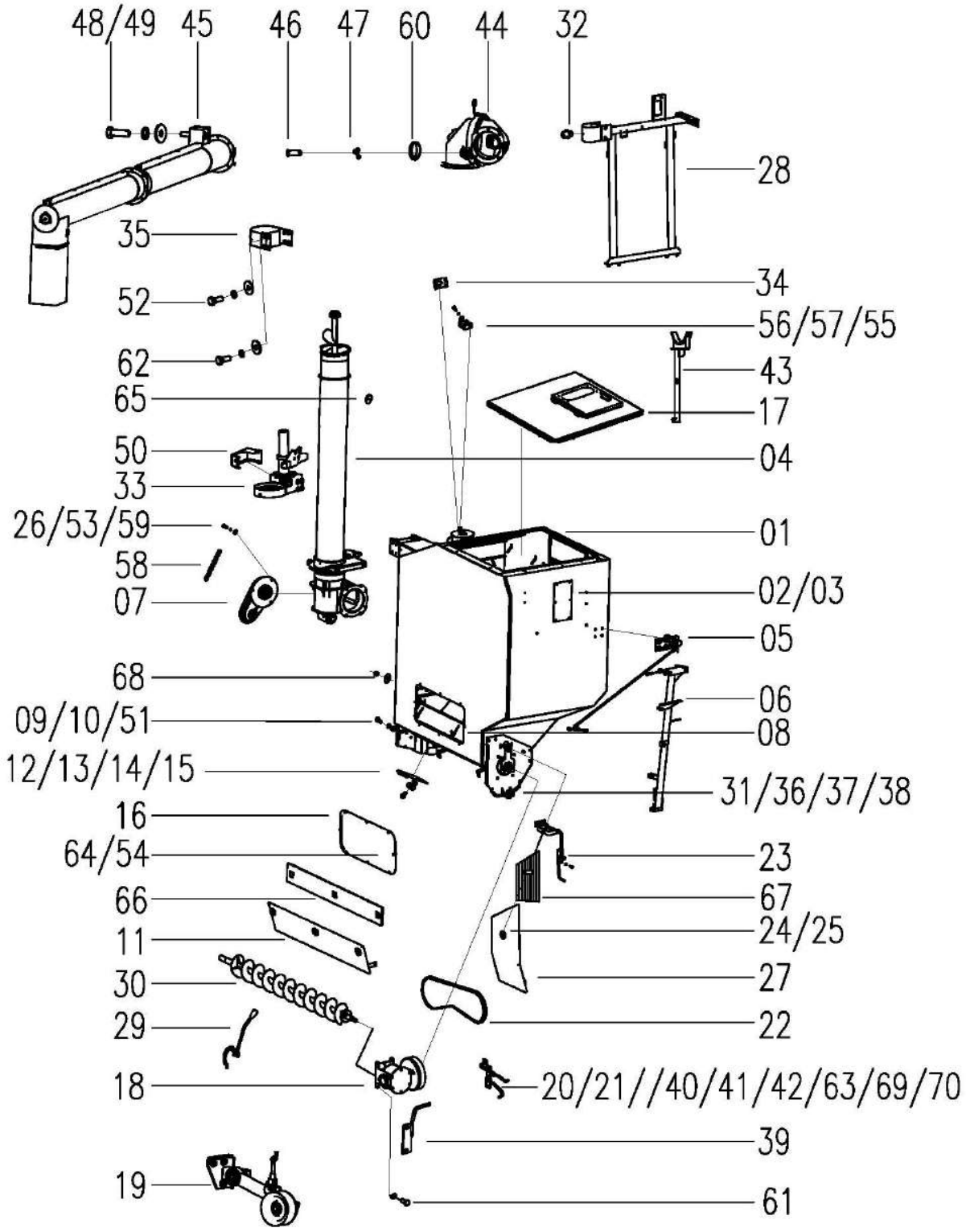

Grain Tank Assy W2.5F-04D-00				
No.	**Description**	**Qty**	**Part Code**	**Remark**
1	Grain Tank Weld	1	W2.5F-04D-01-00	
2	Filter Cover	1	W2.5-04-02-03-07	
3	Rivet φ3.2 × 9	6	GB/T12618-1990	
4	Vertical Lifting Auger Assy	1	W2.5B-04BX-02HB-00	
5	Tie Rod Combination	1	W2.5F-04D-06-00	
6	Front Frame Assy	1	W2.5F-04-07-00	
7	Chain Box Assy	1	W2.5B-04HX-22A-00	
8	Grain Guide Cover Combination	1	W2.5F-04A-21-00	
9	Nut M10	10	GB/16170-86	
10	Washer 10	20	GB/T93-87	
11	Cover Assy	1	W2.5F-04D-18-00	
12	Bolt M6 × 16	19	GB/T5783-86	
13	Washer 6	9	GB/T96-85	
14	Washer 6	19	GB/T93-87	
15	Seal Plate	1	W2.5B-04-29	
16	Grain Insert	1	W2.5B-04-27	
17	Cover Assy	1	W2.5F-04HX-13-00	
18	Gearbox Assy	1	W2.5B-04HX-17B-00	
19	Tension Wheel Frame Assy	1	W2.5B-04CM-02-00	
20	Belt Limiter Assy	1	W5.0-04Q-07-00	Changchai engine
21	Belt Limiter Assy	1	W5.0-04Q-07Q-00	Quanchai engine
22	Belt	1	W2.5B-04-32	
23	Cover Frame Assy	1	W2.5F-04HX-19-00	
24	Nut	1	W2.0-01-02-07-00	
25	Washer, Big 8	4	GB/T96-85	
26	Washer 8	6	GB/T93-87	
27	Right Cover Weld	1	W2.5F-04D-14-00	
28	Rear Frame Assy	1	W2.5F-04A-09-00	
29	Unloading Operation Combination	1	W2.5B-04CY-12B-00	
30	Grain Auger Combination	1	W2.5F-04A-11-00	
31	Washer 16	2	GB/T97.1-85	
32	Oil Cup M6	2	JB/T7940.1	
33	Horizontal Driving Assy	1	W2.5B-04BX-12HB-00	
34	Turning Signal Frame Assy	1	W2.5B-04-35-00	
35	Outer Hoop	1	W2.5B-04HX-06A-01-01	
36	Bolt M16 × 40	1	GB/T5783-86	
37	Washer 16	1	GB/T93-87	
38	Nut M16	1	GB/T6170-86	

Grain Tank Assy W2.5F-04D-00

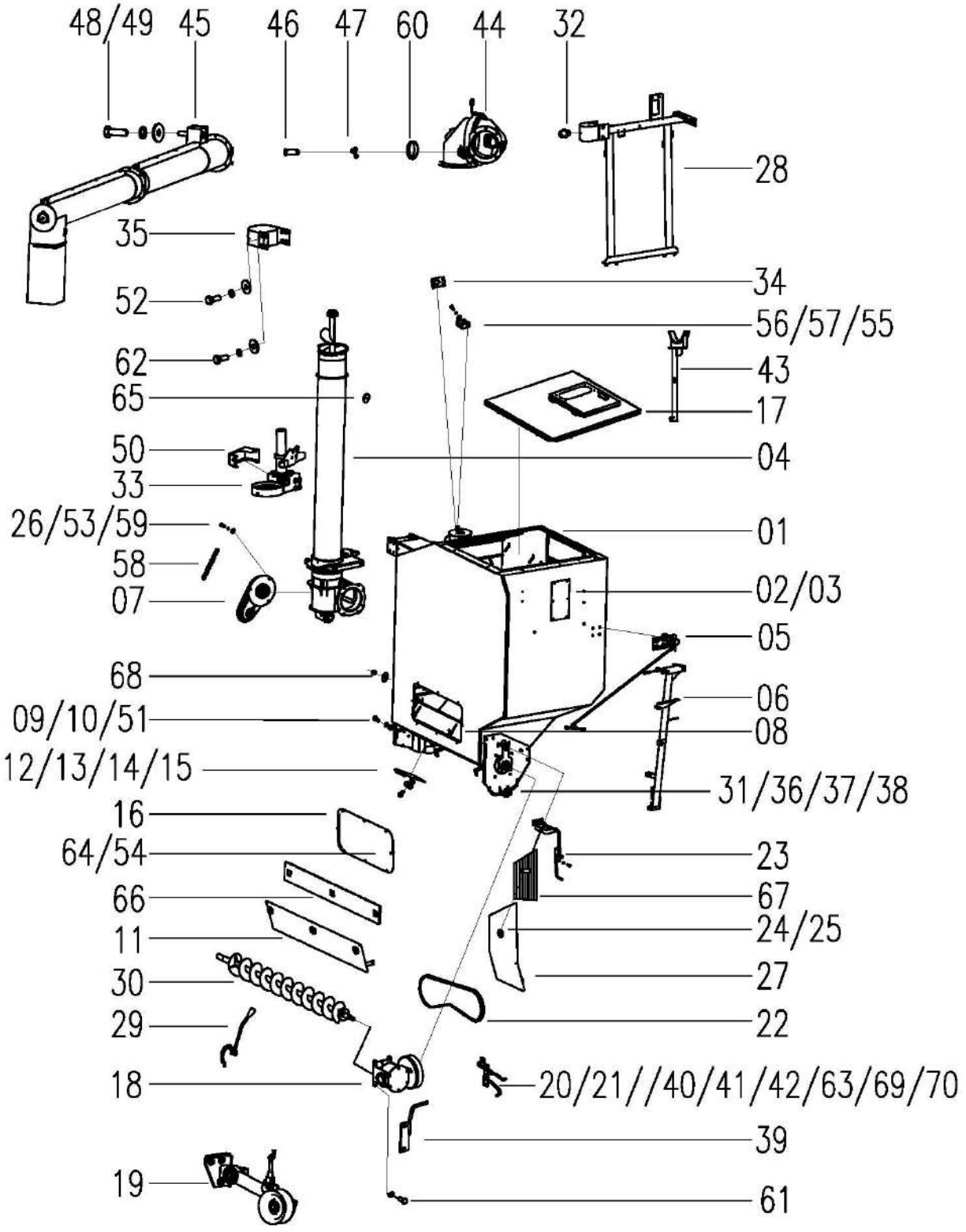

Grain Tank Assy W2.5F-04D-00				
No.	**Description**	**Qty**	**Part Code**	**Remark**
39	Belt Stopper Weld	1	W2.5B-04HX-20B-00	
40	Belt Limiter Assy	1	W2.5B-04-19X-00	Xinchai engine
41	Belt Limiter Assy	1	W5.0-04Q-07YC-00	Yuchai engine
42	Belt limiter Assy	1	W2.5B-04BX-19 YG -00D	Yuchai engine
43	Support Assy	1	W2.5E-04HX-06-00	
44	Upper Box Assy	1	W2.5B-04BX-03-00	
45	Grain Unloading Auger Assy	1	W2.5F-04A-04-00D	
46	Pin Shaft B20 × 70	1	GB/T882-86	
47	Pin 5 × 40	1	GB/T91-86	
48	Bolt M8 × 20	1	GB/T5783-86	
49	Retaining Ring	1	W2.5B-04BX-15	
50	Motor Cover Assy	1	W2.5E-04HX-15-00	
51	Bolt M10 × 25	12	GB/T5783-86	
52	Washer	8	W2.5-02-56-26	
53	Nut M8	3	GB/T6170-86	
54	Bolt M6 × 20	8	W3.5H-04BX-05-00	
55	Bolt M8 × 50	1	GB/T5782	
56	Nylon Clip	2	W2.5B-04BX-12-07	
57	Washer, Plain 8	1	GB/T97.1	
58	Roller Chain 10A-40	1	W2.5B-04HX-08A	
59	Bolt M8 × 25	2	GB/T5783-86	
60	Washer 20	1	GB/T97.1-85	
61	Bolt M10 × 35	2	GB/T5783-86	
62	Bolt M10X30	4	GB/T5783-86	
63	Belt limiter Assy	1	W2.5B-04-19 DC -00	
64	Bolt M6×16	8	GB/T5783	
65	Rear Reflector	1	W2.0-02-02-04-00	
66	Cover Sound-absorbing Sponge	1	W2.5F-04D-23	
67	Right Cover, Sound-absorbing Sponge	1	W2.5F-04D-24	
68	Big Washer, Plain 10	2	GB/T96	
69	Belt Limiter Assy	1	W2.5B-04BX-19 YG -00F	Yuchai F30 engine
70	Belt limiter Assy		W2.5B-04-19X-00B	Xinchai engine

Upper Box Assy W2.5B-04BX-03-00

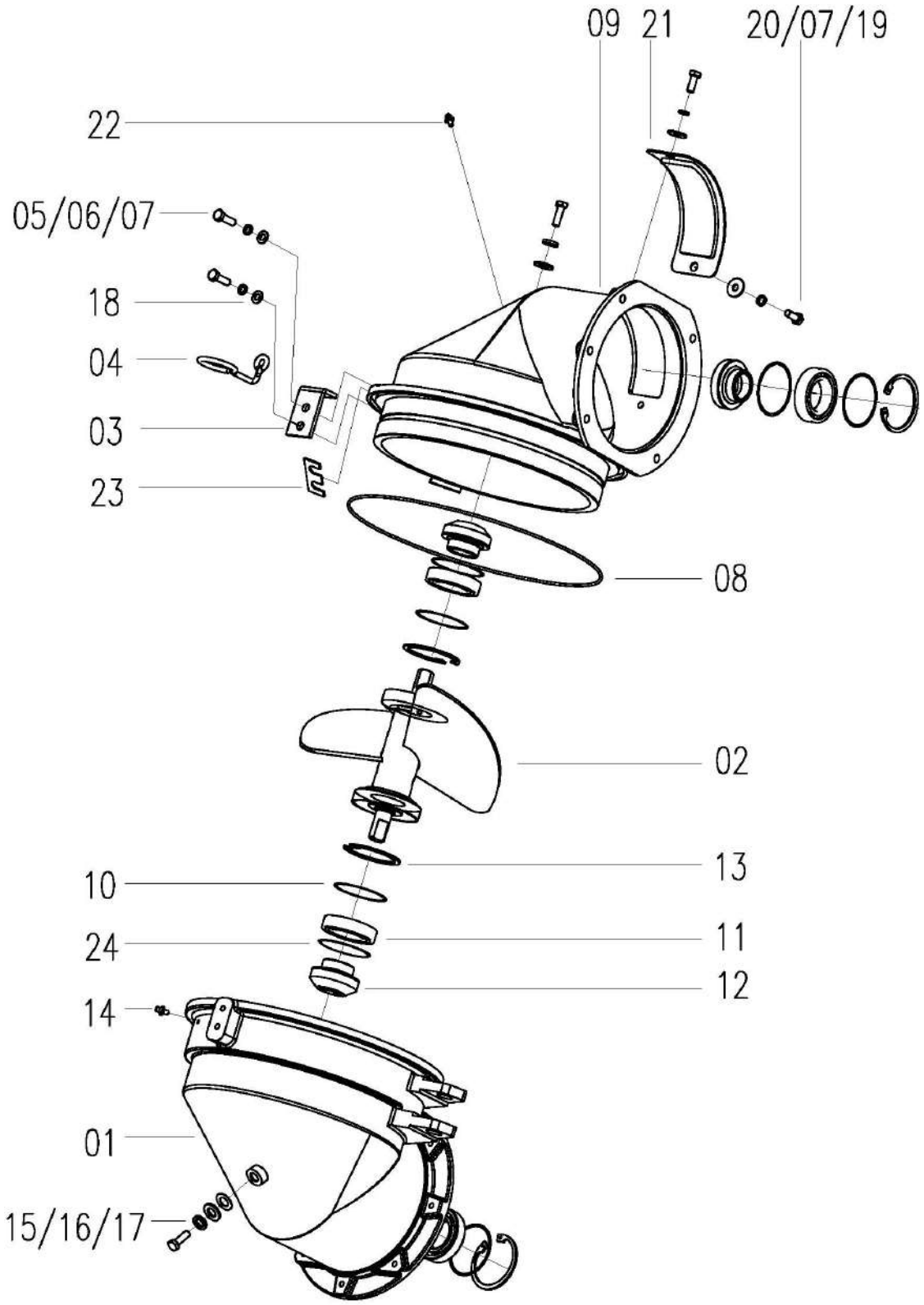

Upper Box Assy W2.5B-04BX-03-00				
No.	**Description**	**Qty**	**Part Code**	**Remark**
1	Upper box B	1	W2.5B-04BX-03-01-01	
2	Middle Short Auger Weld	1	W2.5B-04BX-03-03-00	
3	Card Plate	1	W2.5B-04BX-03-04	
4	Tube Clip	1	W2.5B-04BX-03-05	
5	Bolt M8 × 30	4	GB/T5783-86	
6	Washer 8	3	GB/T96-85	
7	Washer 8	6	GB/T93-87	
8	O-ring 315 × 5.3-G-N	1	GB/T3452.1-2005	
9	Upper Box A	1	W2.5B-04BX-03-02-01	
10	Adjustment Gasket	4	W2.5B-04BX-11-01-02	
11	Bearing 6008-RS, Lifting Box	4	W2.5B-04BX-11-01-07	
12	Bevel Gear	4	W2.5B-04BX-11-01-03	
13	Circlip for Hole 68	4	GB/T893.2-86	
14	Oil Cup M6	2	GB/T1152-89	
15	Bolt M12 × 25	2	GB/T5783-86	
16	Washer 12	2	GB/T97.1-85	
17	Washer 12	2	GB/T93-87	
18	Washer, Plain	1	01.03C-02	
19	Bolt M8 × 16	2	GB/T5783-86	
20	Washer 8	2	GB/T96-85	
21	Sealing Plate Weld	1	W2.5B-04BX-03-02-02-00	
22	Oil Cup M8	1	GB/T1152-89	
23	Adjustment Gasket	1	W2.5B-04BX-03-06	
24	Adjustment Gasket	4	W2.5B-04BX-11-01-06	

Gearbox Assy W2.5B-04HX-17B-00

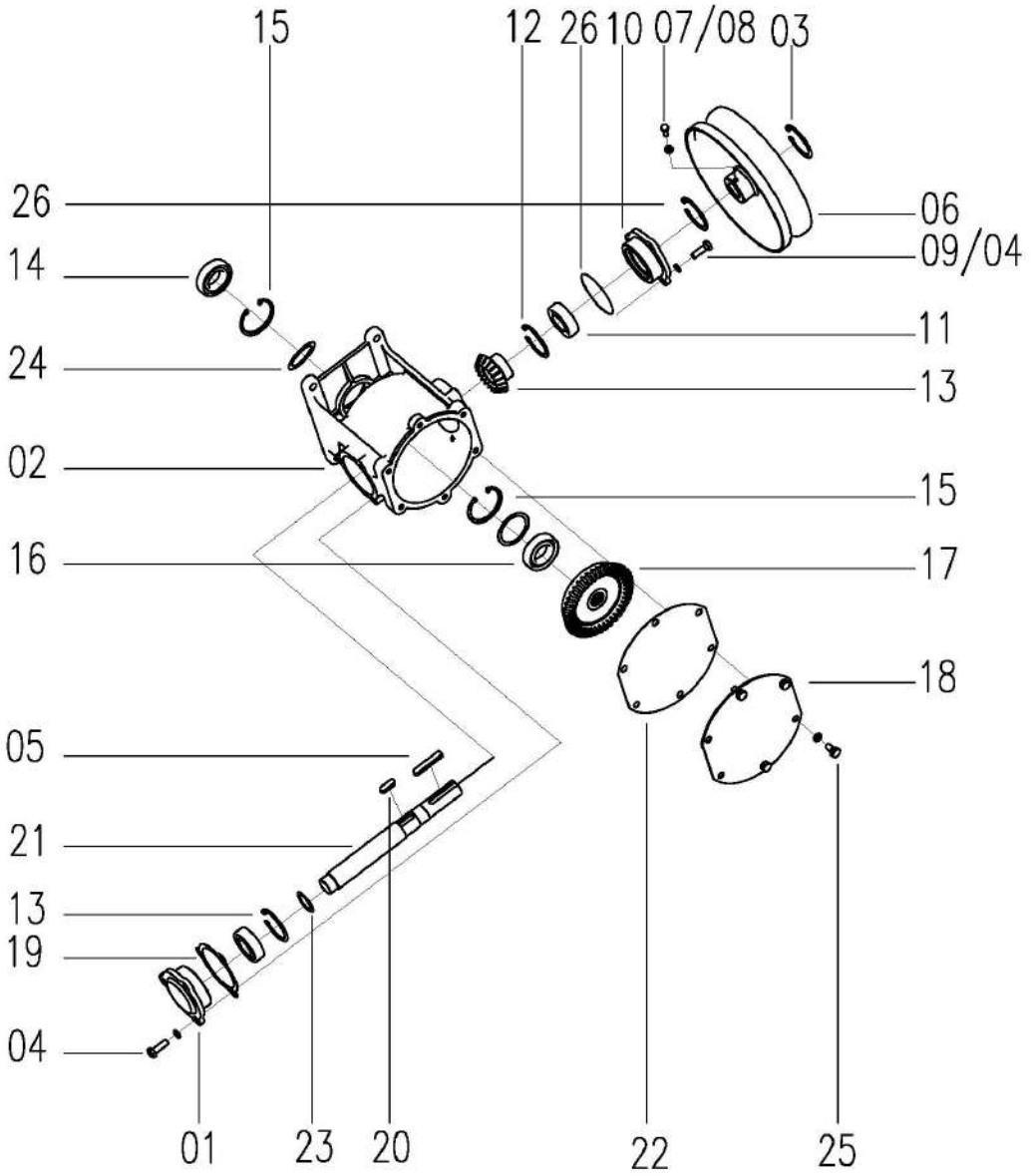

Gearbox Assy W2.5B-04HX-17B-00				
No.	**Description**	**Qty**	**Part code**	**Remark**
1	Bearing Block	1	W2.5B-04-10-04	
2	Transmission Box	1	W2.5B-04HX-17B-01	
3	Circlip for Shaft 24	1	GB/T894.1	
4	Washer 8	12	GB/T93-87	
5	Key A8X50	1	GB/T1096-79	
6	Belt Pulley Weld	1	W2.5B-04HX-17B-04-00	
7	Bolt M8X16	7	GB/5783-86	
8	Nut M8	1	GB/6170-86	
9	Bolt M8X25	6	GB/T5783-86	
10	Bearing Block	1	W2.5B-04HX-17B-02	
11	Bearing 6205-RS	2	GB/T276-94	
12	Circlip for Hole 52	3	GB/T893.1-86	
13	Small bevel gear	1	W2.5B-04-10-06	
14	Bearing 6006-2RS	1	GB/T276-94	
15	Circlip for Hole 55	2	GB/T893.1-86	
16	Bearing 6006-RS	1	GB/T276-94	
17	Large Bevel Gear	1	W2.5B-04-10-02	
18	Cover	1	W2.5B-04-10-07	
19	Adjustment Gasket	On demand	W2.5B-04-10-08	
20	Key 8X25	1	GB/T1096-79	
21	Gear Shaft	1	W2.5B-04HX-17B-03	
22	Sealing Plate	1	W2.5B-04-10-11	
23	Adjustment Pad 2	On demand	W2.5B-04-10-10	
24	Adjustment Pad B	On demand	W2.0B-04E-15-06	
25	Washer 8	2	GB/T97.1	
26	Circlip for Shaft 68	1	GB/T894.1	

Vertical Lifting Auger Assy W2.5B-04BX-02HB-00

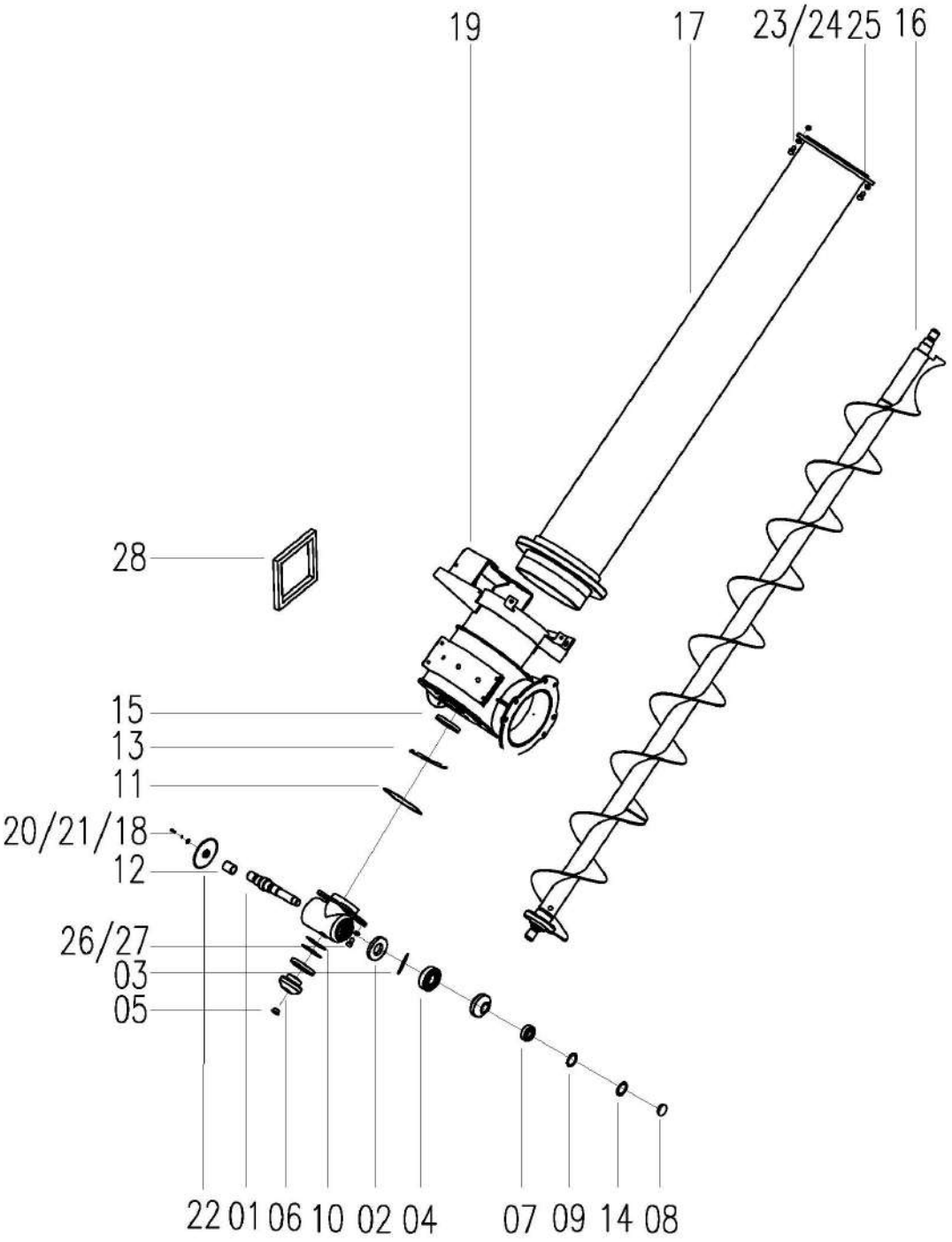

Vertical Lifting Auger Assy W2.5B-04BX-02HB-00

No.	Description	Qty	Part code	Remark
1	Transmission Shaft	1	W2.5B-04BX-02H-05-02	
2	Sealing Ring 32 × 62 × 8	1	GB/T13871-92	
3	Retaining Ring 62	1	GB/T893.1	
4	Bearing 6305-2RS	1	WD.12MC.9-01	
5	Sealing Cover	1	W2.5B-04HX-02A-05-07	
6	Bevel Gear	2	W2.5B-04HX-02A-05-03	
7	Bearing 6008-2RS	2	W2.5B-04BX-11-01-07	
8	Plug	1	W2.0M-04-10-02	
9	Adjustment Gasket	On demand	W2.5B-04BX-11-01-06	
10	Gear Box	1	W2.5B-04BX-02H-05-01	
11	Retaining Ring 68	2	GB/T893.1	
12	Spacer	1	W2.5B-04BX-02H-05-03	
13	Adjustment Gasket	On demand	W2.5B-04BX-02H-05-04	
14	Adjustment Gasket	On demand	W2.5B-04BX-11-01-02	
15	FB type 46X68X8	1	GB/T13871-92	
16	Lifting stir Weld	1	W2.5B-04BX-02H-02-00	
17	Lifting Auger Weld	1	W2.5B-04BX-02HB-01-00	
18	Washer 8	9	GB/T93-87	
19	Square Cross	1	W2.5B-04HX-02A-04-00C	
20	Bolt M8X20	1	G GB/T5783-86	
21	Retaining Ring for Shaft	1	L1.8A-02-03-09	
22	Chain Wheel 10A × 15	1	W2.5B-04HX-02A-07	
23	Bolt M8X35	7	GB/T5783-86	
24	Nut M8	7	GB/T6170-86	
25	Bolt M8X25	1	GB/T5783-86	
26	Bolt M10X20	1	GB/T5783-86	
27	Washer 10	4	GB/T93-87	
28	Sponge Pad 1	1	W2.5DA-07-06-03-06	

Grain Unloading Outrigger Assy W2.5F-04A-04-00D

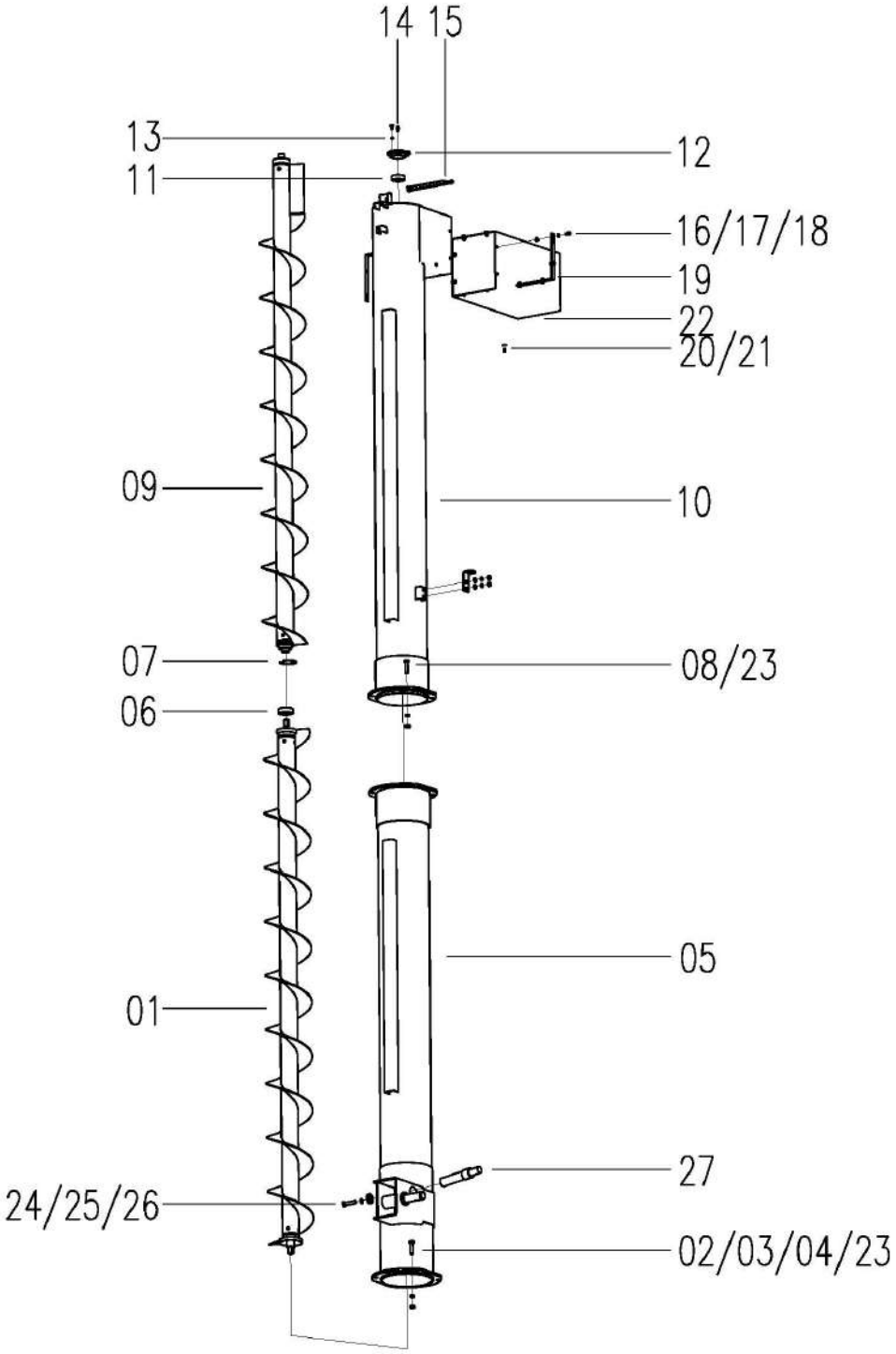

Grain Unloading Outrigger Assy W2.5F-04A-04-00D				
No.	**Description**	**Qty**	**Part code**	**Remark**
1	Grain Discharge Auger A	1	W2.5B-04BX-04-01-00	
2	Bolt M10 × 40	5	GB/T5783-86	
3	Washer 10	10	GB/T93-87	
4	Nut M10	10	GB/T6170-86	
5	Grain Unloading Auger Housing Weld A	1	W2.5B-04BX-04D-03-00B	
6	Grain miscellaneous Bearing 6304-2RS	1	W2.5-02-02-10-16	
7	Circlip for Hole 52	1	GB/T893.2-86	
8	Bolt M10 × 35	5	GB/T5783-86	
9	Grain Discharge Auger B	1	W2.5B-04BX-04B-02-00	
10	Grain Unloading Auger Housing Weld B	1	W2.5F-04A-04B-04-00	
11	Bearing 6204-RS	1	GB/T276-82	
12	Bearing Seat Cover	1	W2.0-02-10-01-04	
13	Cushion 6	11	GB/T93	
14	Oil Cup M6	1	GB/T1152-89	
15	Baffle Plate	1	W2.5B-04BX-04-07-00	
16	Bolt M6 × 16	11	GB/T5783-86	
17	Washer 6	8	GB/T97.1-85	
18	Nut M6	8	GB/T6170-86	
19	Guide Tube Fixing	2	W2.5B-04BX-04-06	
20	Rivet φ4 × 12	4	GB/T12618-1990	
21	Washer	8	W2.5B-04B-09-04	
22	Sleeve	1	W2.5B-04BX-04B-05	
23	Washer, Plain 10	15	GB/T97.1	
24	Retaining Ring	1	WD.1F-12	
25	Cushion 12	1	GB/T93	
26	Bolt M12 × 25	1	GB/T5783	
27	Supporting Shaft		W2.5B-04BX-04D-10B	

Grain Discharge Level Driven Assy W2.5B-04BX-12HB-00

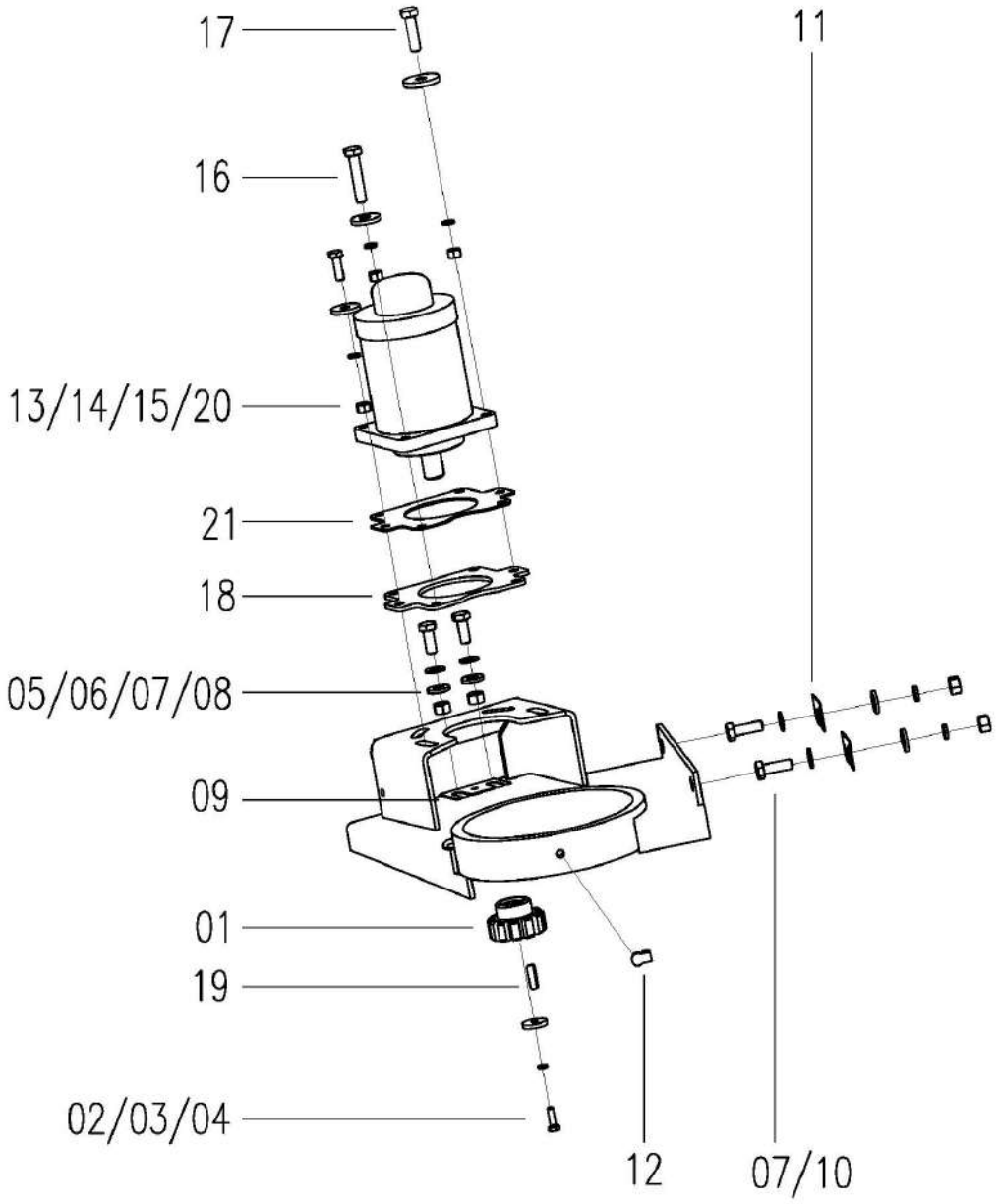

Grain Discharge Level Driven Assy W2.5B-04BX-12HB-00

No.	Description	Qty	Part code	Remark
1	Driving Gear	1	W2.5B-04BX-12-06	
2	Retaining Ring	1	W2.5B-04BX-12-05	
3	Bolt M6X20	1	GB/T5783-86	
4	Washer 6	1	GB/T93-87	
5	Washer 10	4	GB/T93-87	
6	Nut M10	4	GB/T6170-86	
7	Washer, Plain	6	WD-150.01.26-01	
8	Bolt M10X25	2	GB/T5783-86	
9	Adjustment Gasket	On demand	W2.5B-04HX-12A-02	
10	Bolt M10 × 30	2	GB/T5783-86	
11	Adjustment Gasket	On demand	W2.5B-04HX-12-03	
12	Oil Cup M6	1	GB/T1152-89	
13	Washer 8	6	GB/T93-87	
14	Nut M8	6	GB/T6170-86	
15	Retaining Ring for Shaft	4	W2.0-02-11-08	
16	Bolt M8X40	2	GB/T5783-86	
17	Bolt M8 × 30	4	GB/T5783-86	
18	Transition Board	1	W2.5B-04BX-12-02	
19	Flat Key C6X25	1	GB/T1096-79	
20	Bolt M8 × 25	2	GB/T5783	
21	Adjustment Gasket	On demand	W2.5B-04BX-12-10	

Chain Box Assy W2.5B-04HX-22A-00

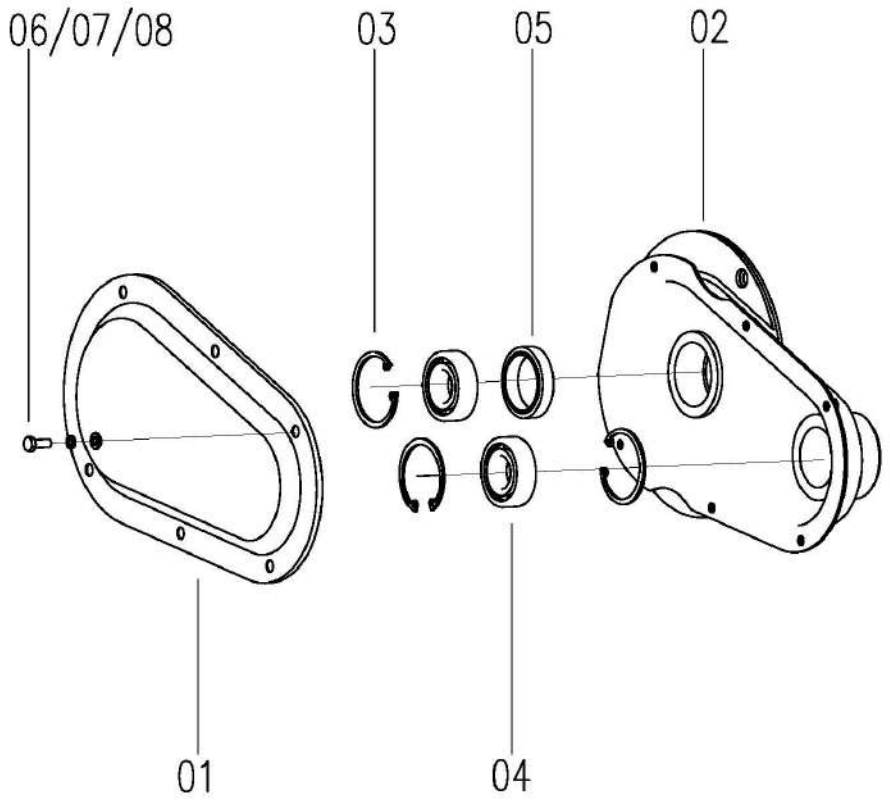

No.	Description	Qty	Part code	Remark
1	Chain Cover	1	W2.5B-04HX-22A-02	
2	Chain Box Weld	1	W2.5B-04HX-22A-01-00	
3	Retaining Ring 52	3	GB/T893.2-86	
4	Grain right Bearing 6205-2RS	2	W2.5K-02PC-10A-02	
5	Oil Seal F B30 × 45 × 10	1	GB/T13871-92	
6	Bolt M6 × 16	6	GB/T5783-86	
7	Washer 6	6	GB/T93-87	
8	Washer 6	6	GB/T97.1-85	

Grain Unloading Auger W2.5F-04A-11-00

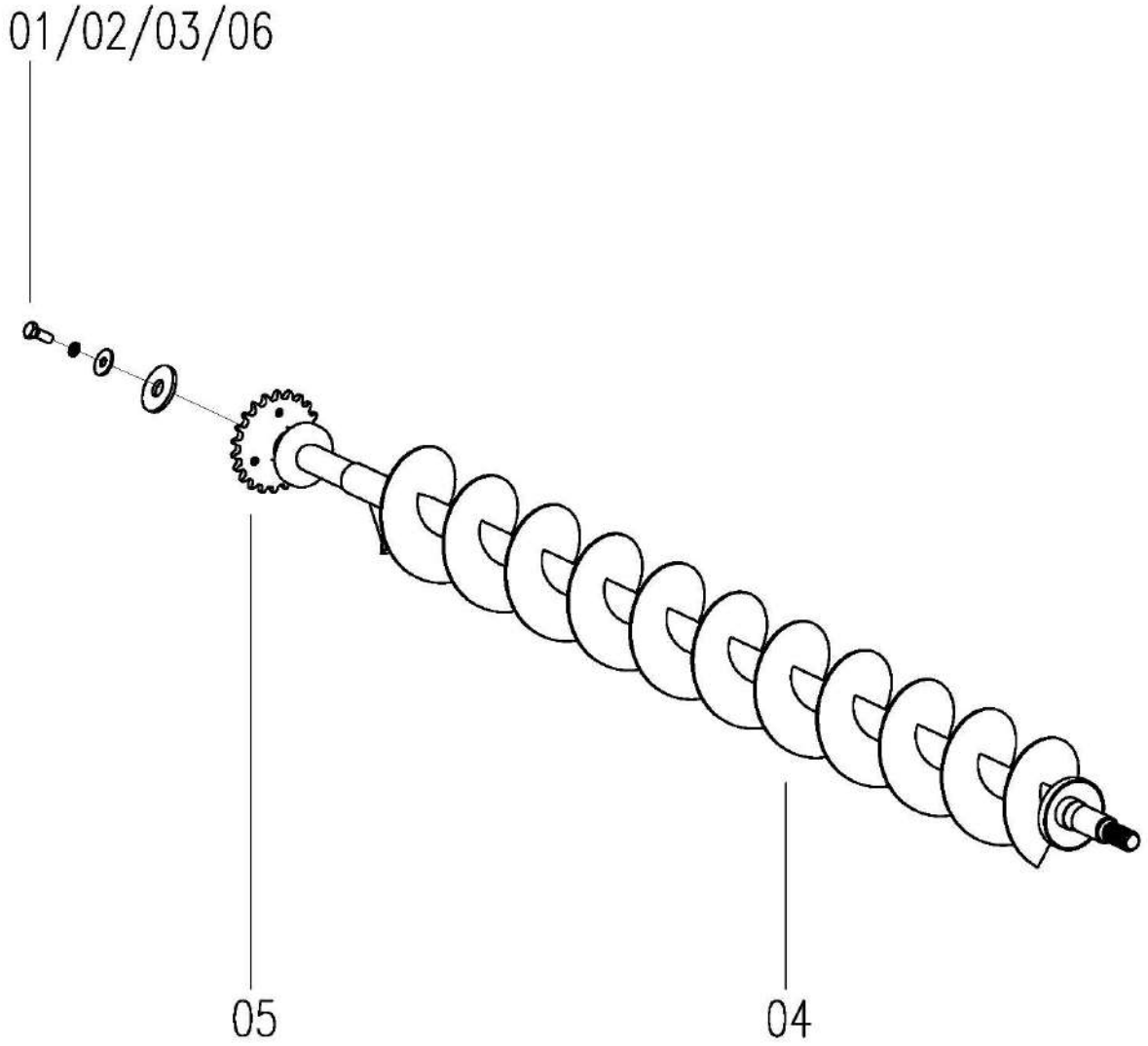

No.	Description	Qty	Part code	Remark
1	Bolt M8 × 20	1	GB/T5783	
	Bolt M8 × 25	1	GB/T5783	
2	Washer 8	1	GB/T93	
3	Retaining Ring for Shaft	1	L1.8A-02-03-09	
4	Grain Auger Weld	1	W2.5F-04A-11-01-00	
5	Chain Wheel 10A × 22	1	W2.5B-04HX-11-02	
6	Gasket	On demand	WD-150.01.29.01-05	

Grain Tank Cover Assy W2.5F-04HX-13-00

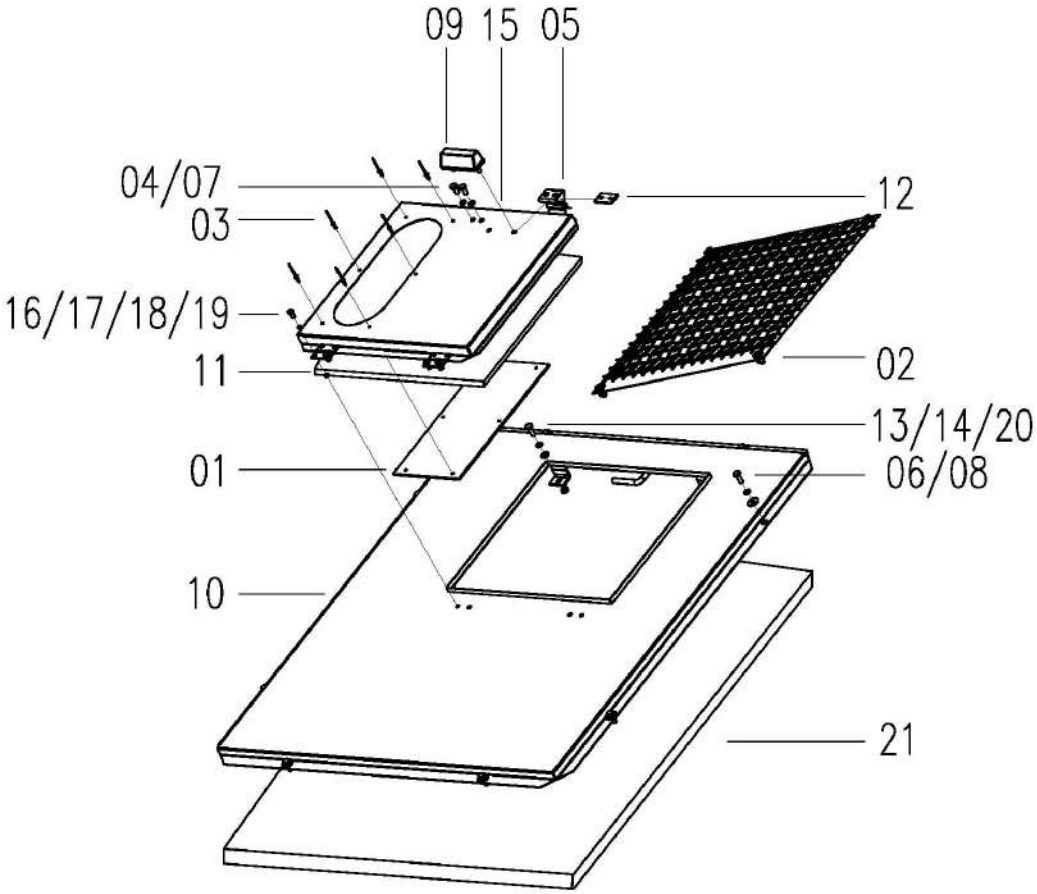

Grain Tank Cover Assy W2.5F-04HX-13-00

No.	Description	Qty	Part code	remark
1	Filter Cover	1	W2.5-04-02-03-07	
2	Safety Net Weld	1	W2.5B-04CY-13-03-00	
3	Rivet φ3.2×9	6	GB/T12618-1990	
4	Bolt M6×12	2	GB/T5783-86	
5	Spring Plate	1	W2.5B-04CY-13-04	
6	Washer, Big 6	9	GB/T96-85	
7	Washer 6	17	GB/T93-87	
8	Bolt M6×16	9	GB/T5783-86	
9	Handle	1	W2.5B-04CY-13-07	
10	Cover Weld, Upper	1	W2.5F-04HX-13-01-00	
11	Sealing Plate	On demand	W2.5B-04CY-13-06	
12	Lock Plate	1	W2.5B-04CY-13-05	
13	Washer 6	12	GB/T97.1-85	
14	Nut M6	8	GB/T6170-86	
15	Cover Weld, Grain Tank	1	W2.5B-04CY-13-02-00	
16	Nut M4	4	GB/T6170-86	
17	Bolt M4×12	4	GB/T5783-86	
18	Washer 4	4	GB/T93-87	
19	Washer 6	4	GB/T97.1-85	
20	Bolt M6×20	4	GB/T5783-86	
21	Sealing Plate	On demand	W2.5B-04CY-13-08	

Cover Assy W2.5F-04A-21-00

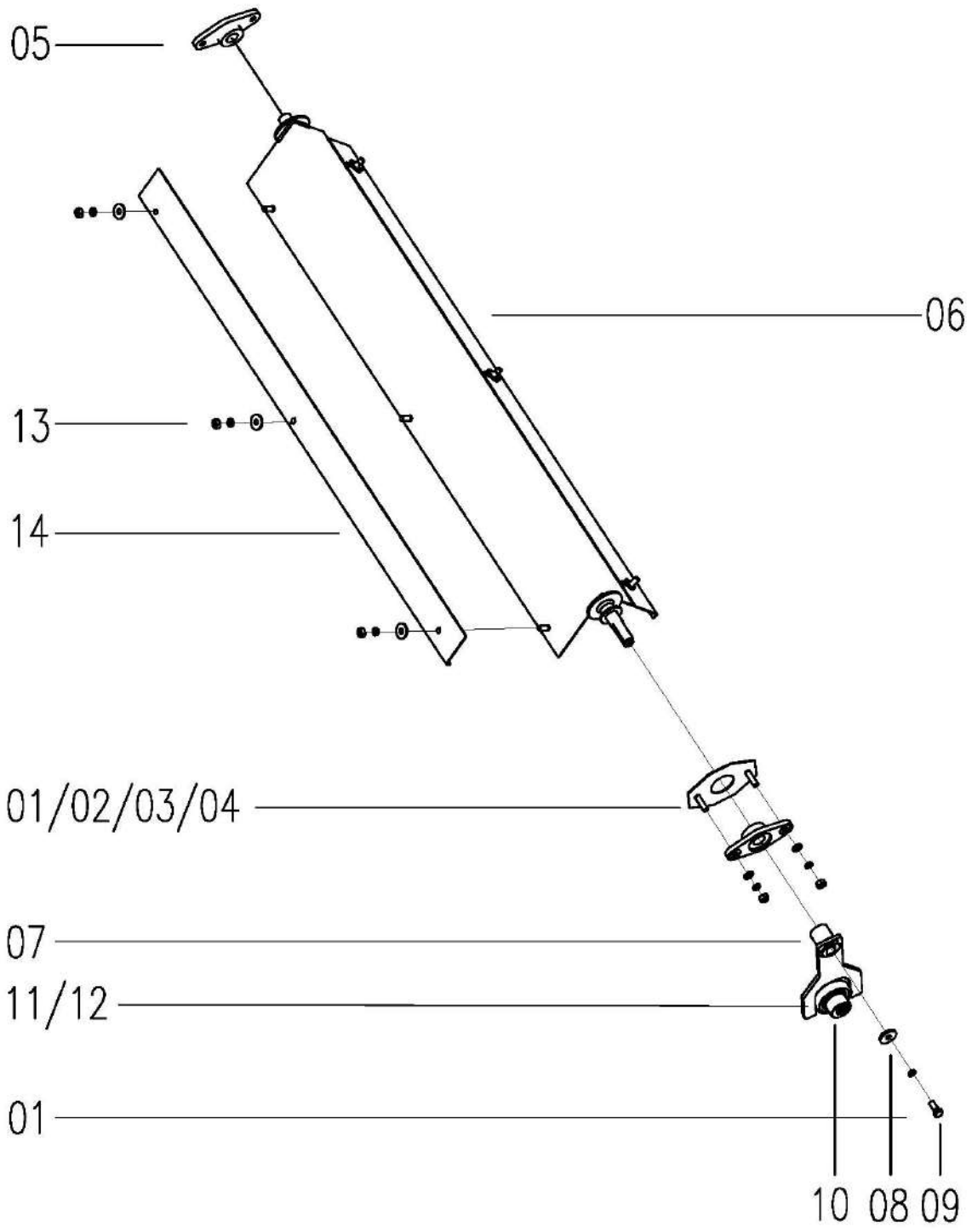

Cover Assy W2.5F-04A-21-00

No.	Description	Qty	Part code	Remark
1	Washer 8	4	GB/T97.1-85	
2	Washer 8	11	GB/T93-87	
3	Nut M8	10	GB/T6170-86	
4	Bolt M8×25	4	GB/T5783	
5	Nylon Sleeve	2	W2.5B-04CD-05-03	
6	Cover Weld	1	W2.5F-04A-21-01-00	
7	Swing Rod Weld	1	W2.5B-04CD-05-04-00	
8	Retaining Ring	1	W2.5B-04CD-05-07	
9	Bolt M8×20	1	GB/T5783-86	
10	Eccentric Key Sleeve	1	W2.5B-04CD-05-02	
11	Circlip for Shaft 35	1	GB/T894-86	
12	Bearing 6007-2RS	1	GB/T276-94	
13	Washer 8	6	GB/T96-85	
14	Washer, Adjusting	2	W2.5F-04A-21-02	

Unloading Handle Assy W2.5B-04CY-12B-00

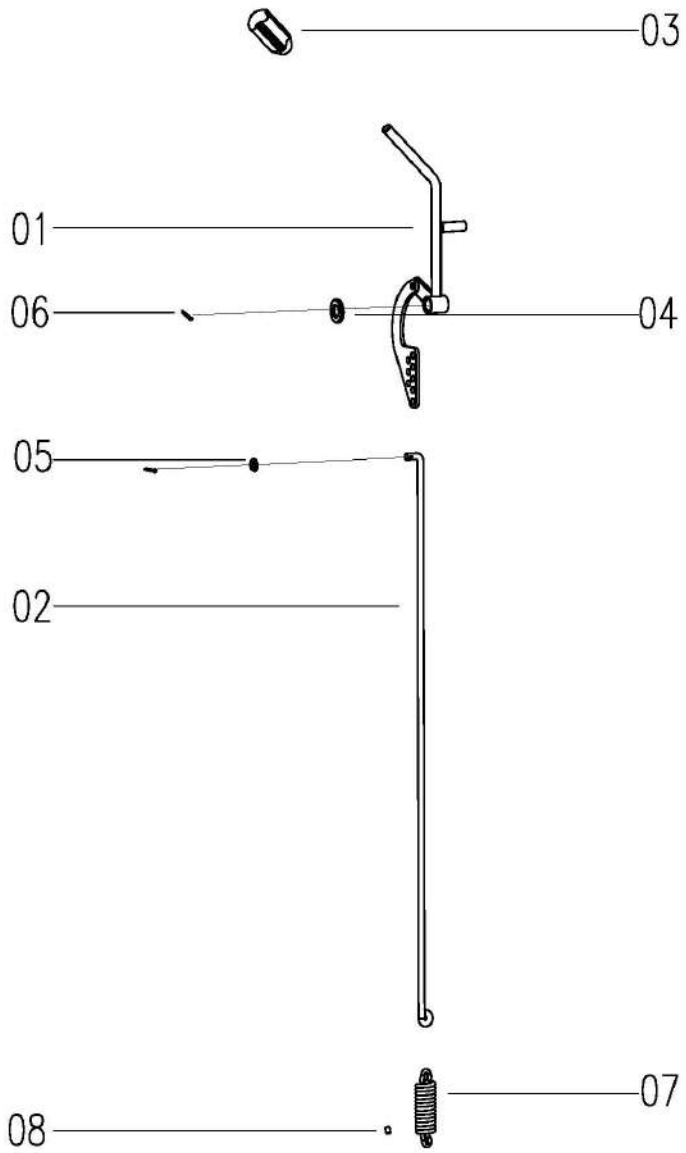

No.	Description	Qty	Part code	Remark
1	Handle Rod Assy, Grain Unloading	1	W2.5B-04CY-12B-01-00	
2	Connecting Rod, Lower	1	W2.5B-04CY-12B-02B	
3	Clutch Lever	1	W2.5DA-07E-05-01	
4	Washer 16	1	GB/T97.1-85	
5	Washer 8	1	GB/T97.1-85	
6	Pin φ2.5x26	2	GB/T91-86	
7	Spring, Grain Unloading	1	W2.5B-04CY-12B-03B	
8	Rubber Tube	1	W2.5B-04CY-12B-04	

Tension Arm Assy W2.5B-04CM-02-00

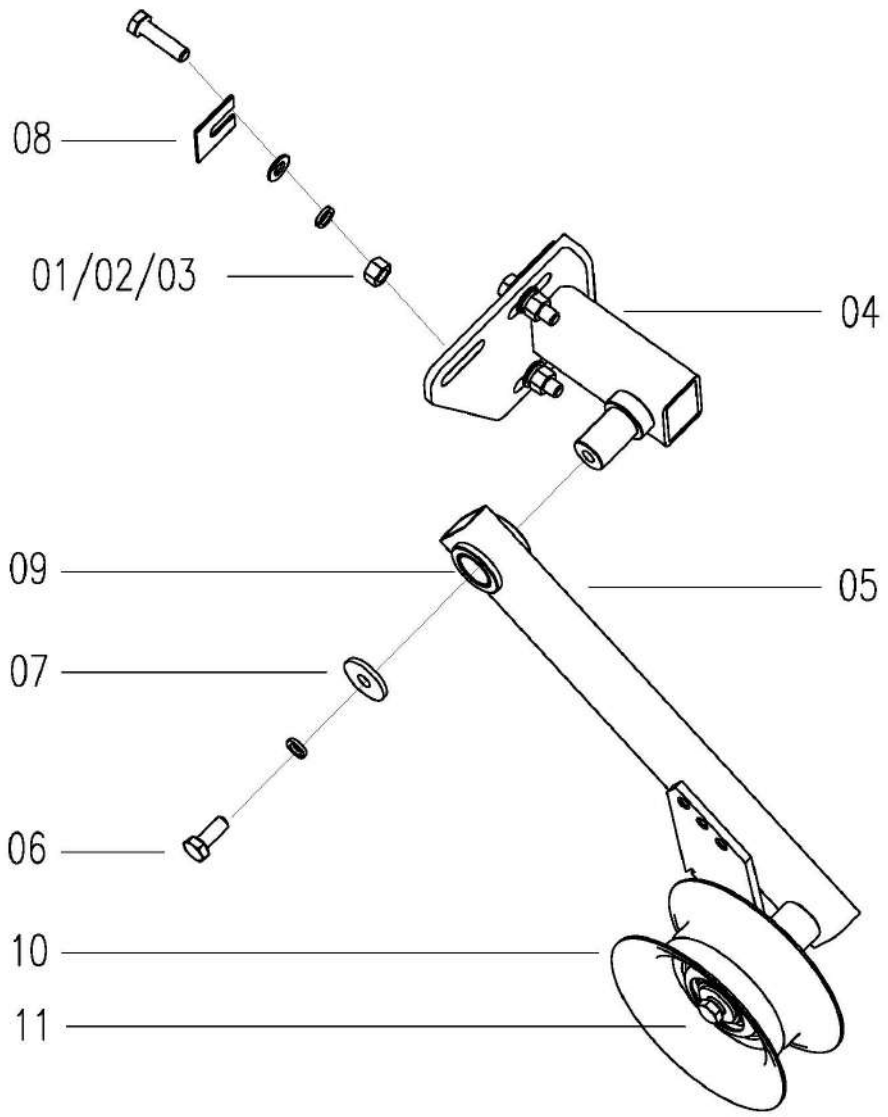

No.	Description	Qty	Part code	Remark
1	Nut M8	3	GB/T6170-86	
2	Washer 8	3	GB/T96-85	
3	Washer 8	5	GB/T93-87	
4	Tension Seat Weld	1	W2.5B-04CM-02-01-00A	
5	Tension Arm Weld	1	W2.5B-04CM-02-02-01-00A	
6	Bolt M8×20	2	GB/T5783-86	
7	Retaining Ring	1	W2.5B-04CM-02-04	
8	Adjustment Gasket	On demand	W2.5B-04CM-02-03	
9	Bearing 1620	2	W2.5-02G-02-32-02	
10	Tension Wheel riveted	1	W2.5B-04CM-02-02-03-00	
11	Retaining Ring	1	W2.0-02-17-03	

Lever Assy W2.5F-04D-06-00

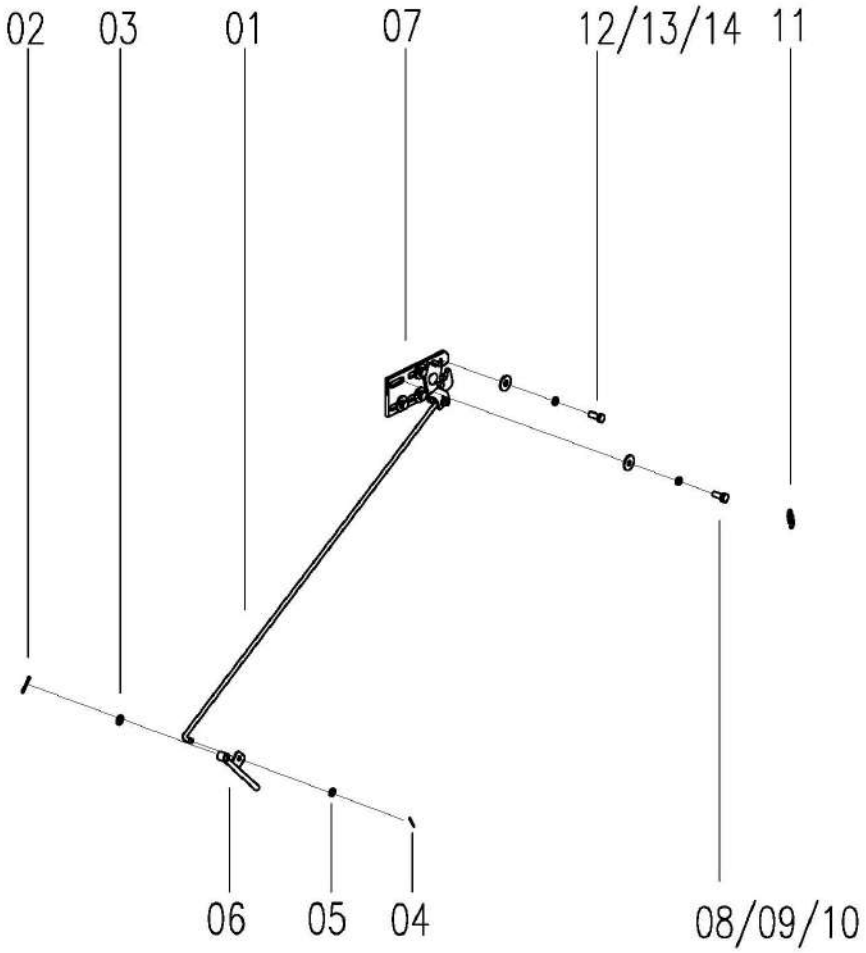

No.	Description	Qty	Part code	Remark
1	Lever	1	W2.5F-04D-06-02	
2	Pin 3.2×24	1	GB/T91-86	
3	Washer 10	1	GB/T97.1-85	
4	Pin 2×22	2	GB/T91-86	
5	Washer 8	2	GB/T97.1-85	
6	Handle Weld	1	W2.5B-04CY-06-01-00	
7	Plate Assy	1	W2.0B-04E-06-02-00	
8	Washer 10	4	GB/T93-87	
9	Washer, Big 10	4	GB/T96-85	
10	Bolt M10×25	4	GB/T5783-86	
11	Tension Spring	1	W2.5B-04-06-05	
12	Nut M6	1	GB/T6170-86	
13	Washer 6	1	GB/T93-87	
14	Bolt M6×16	1	GB/T5783-86	

Cover Assy W2.5E-04HX-15-00

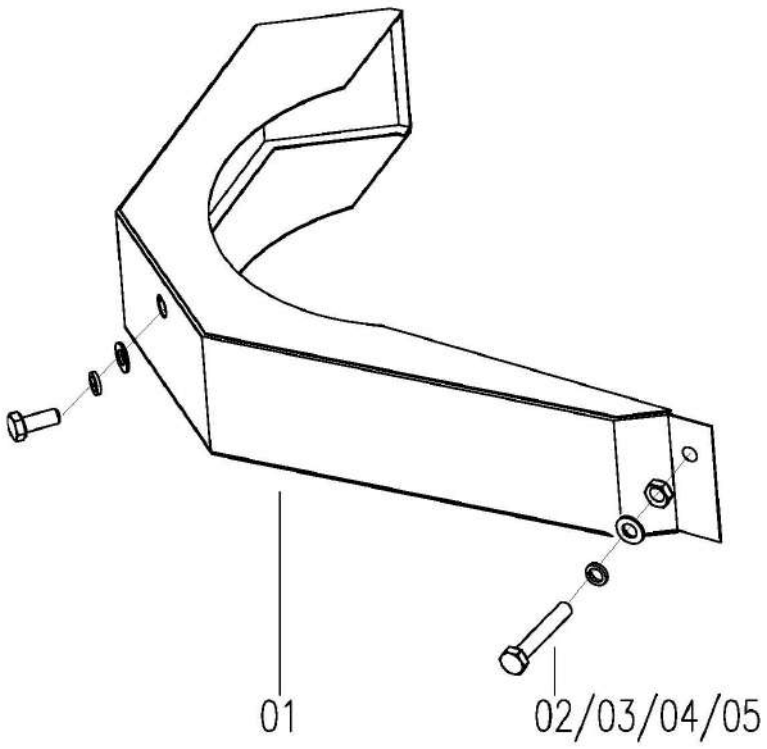

No.	Description	Qty	Part code	Remark
1	Cover Weld	1	W2.5E-04HX-15-01-00	
2	Bolt M6×16	3	GB/T5783-86	
3	Washer 6	3	GB/T93-87	
4	Washer, Big 6	3	GB/T96-85	
5	Nut M6	1	GB/T6170-86	

Support Assy W2.5E-04HX-06-00

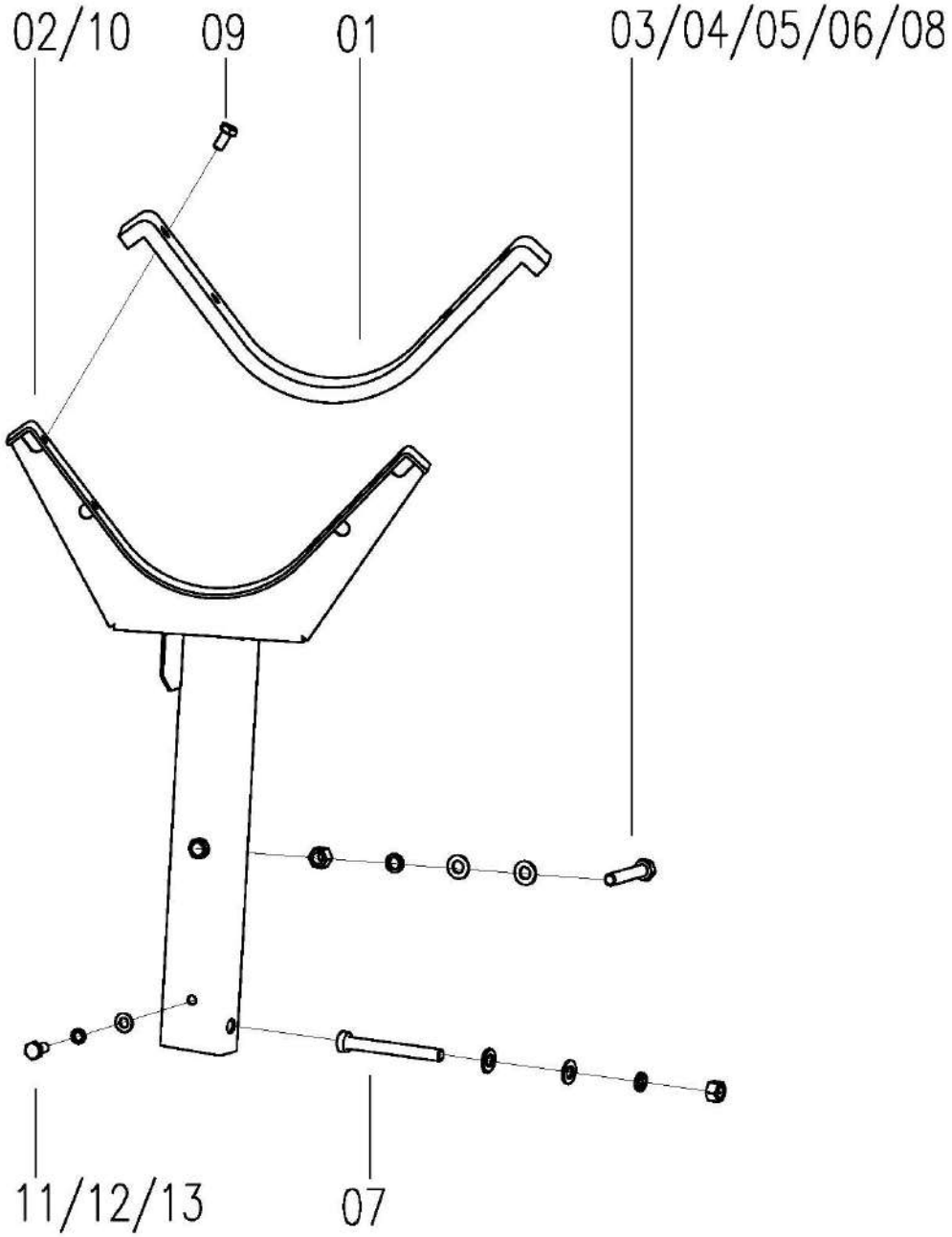

Support Assy W2.5E-04HX-06-00

No.	Description	Qty	Part code	Remark
1	Rubber	1	W2.5E-04HX-06-02	
2	Support Weld	1	W2.5E-04HX-06-01-00	
3	Bolt M10×55	1	GB/T5782-86	
4	Washer 10	2	GB/T93-87	
5	Washer 10	3	GB/T96-85	
6	Nut M10	2	GB/T6170-86	
7	Bolt M10×90	1	GB/T5782-86	
8	Washer 10	1	GB/T97.1-85	
9	Bolt 7	4		
10	Support Weld	1	W2.5E-04HX-06-01B-00	
11	Bolt M8×16	1	GB/T5783	
12	Washer 8	1	GB/T96	
13	Cushion 8	1	GB/T93	

Belt Limiter Assy W5.0-04Q-07Q-00

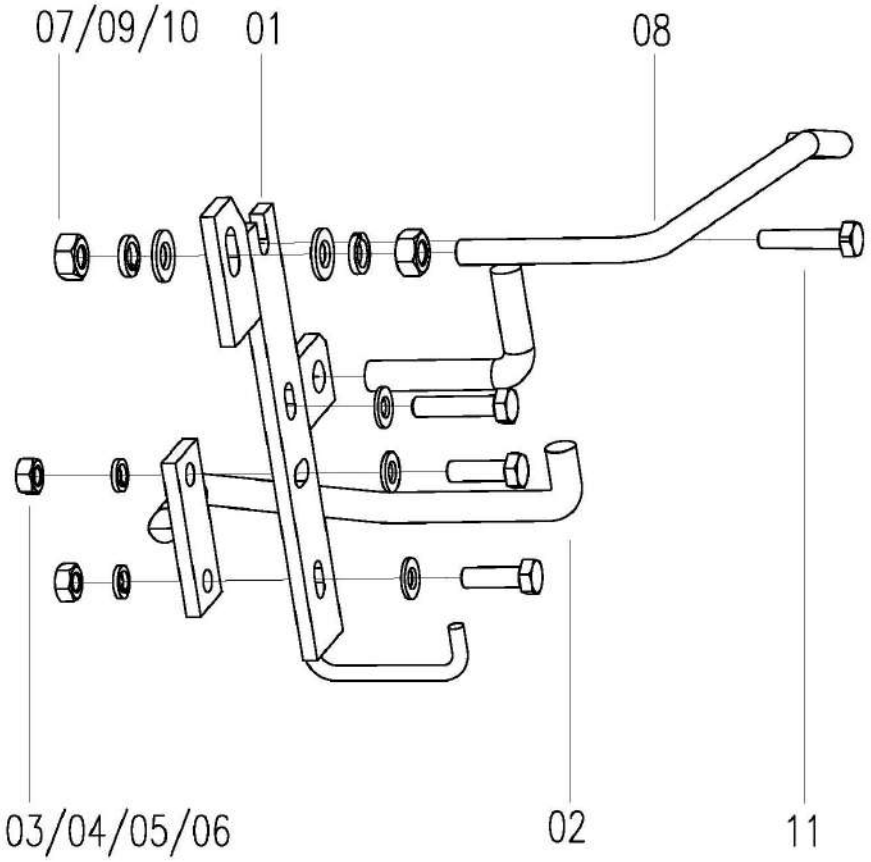

No.	Description	Qty	Part code	Remark
1	Belt Stopper Weld	1	W5.0-04Q-07Q-01-00	
2	Lower Frame Weld	1	W2.5B-04-19 Q -02-00	
3	Bolt M8X25	2	GB/T5783-86	
4	Washer 8	2	GB/T93-87	
5	Washer 8	2	GB/T97.1-85	
6	Nut M8	2	GB/T6170-86	
7	Nut M10	2	GB/6170-86	
8	Steel Bar Weld, Pressing Belt	1	W2.0A-04-20-03	
9	Washer 10	2	GB/T97.1-85	
10	Washer 10	2	GB/T93-87	
11	Bolt M8X45	2	GB/T5783-86	

Front Frame Assy

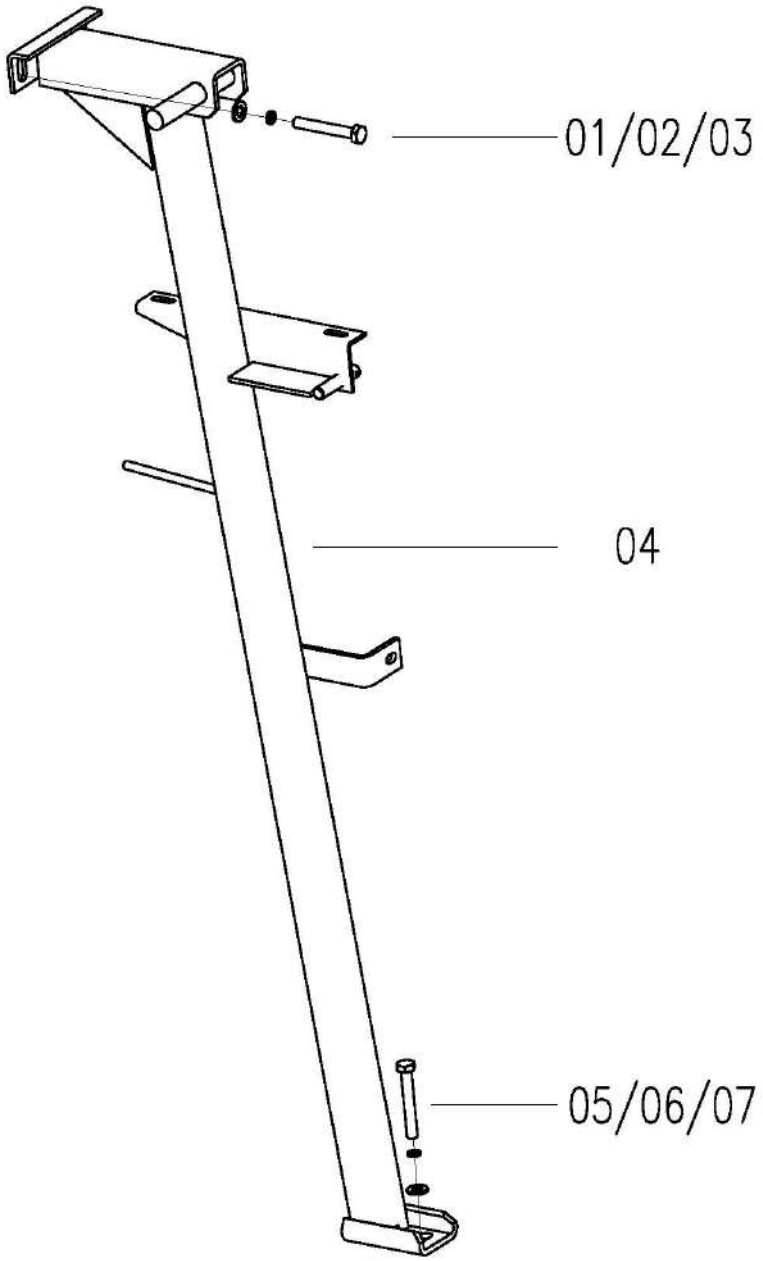

No.	Description	Qty	Part code	Remark
1	Bolt M10×25	2	GB/T5783-86	
2	Washer, Plain	2	WD-150.01.26-01	
3	Washer 10	2	GB/T93-87	
4	Frame Weld, Front	1	W2.5F-04-07-01-00	
5	Bolt M12×30	1	GB/T5783-86	
6	Washer 12	1	GB/T96-85	
7	Washer 12	1	GB/T93-87	

Rear Frame Assy W2.5F-04A-09-00

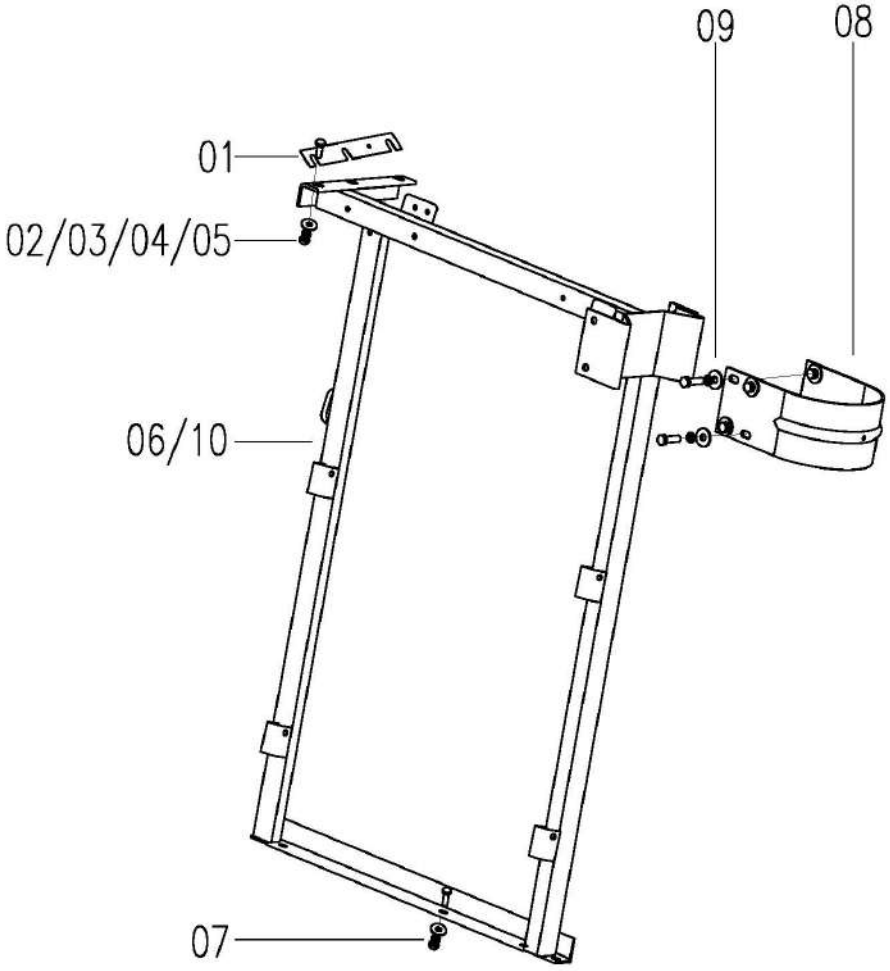

No.	Description	Qty	Part code	Remark
1	Adjustment Gasket	Do demand	W2.5B-04-03-03	
2	Bolt M10×30	3	GB/T5783	
3	Washer 10	11	GB/T93	
4	Washer 10	10	GB/T96	
5	Nut M10	7	GB/T6170	
6	Frame Assy, Rear	1	W2.5F-04A-09-01-00	
7	Bolt M10×25	4	GB/T5783	
8	Hoop	1	W2.5B-04CY-09B-02	
9	Washer, Plain	2	WD-150.01.26-01	
10	Frame Assy, Rear	1	W2.5F-04A-09-01B-00	

Cover Frame Weld W2.5F-04HX-19-00

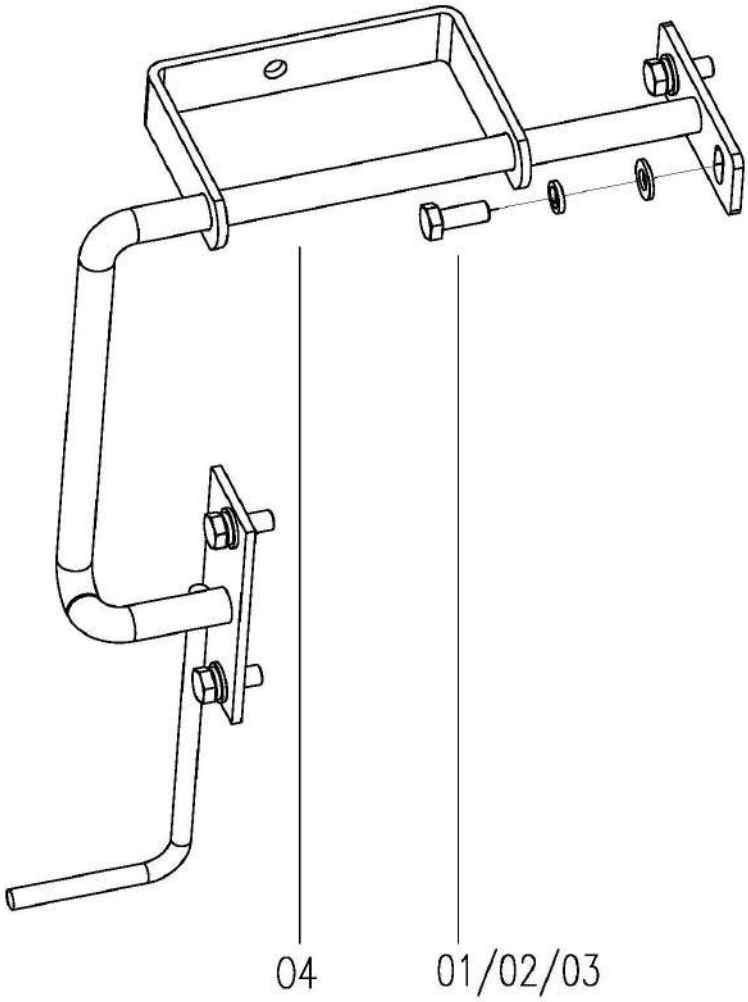

No.	Description	Qty	Part code	Remark
1	Bolt M8 × 20	2	GB/T5783-86	
2	Washer 8	2	GB/T93-87	
3	Washer 8	2	GB/T96-85	
4	Cover Frame Weld	1	W2.5F-04HX-19-01-00	

Cover Assy W2.5F-04D-18-00

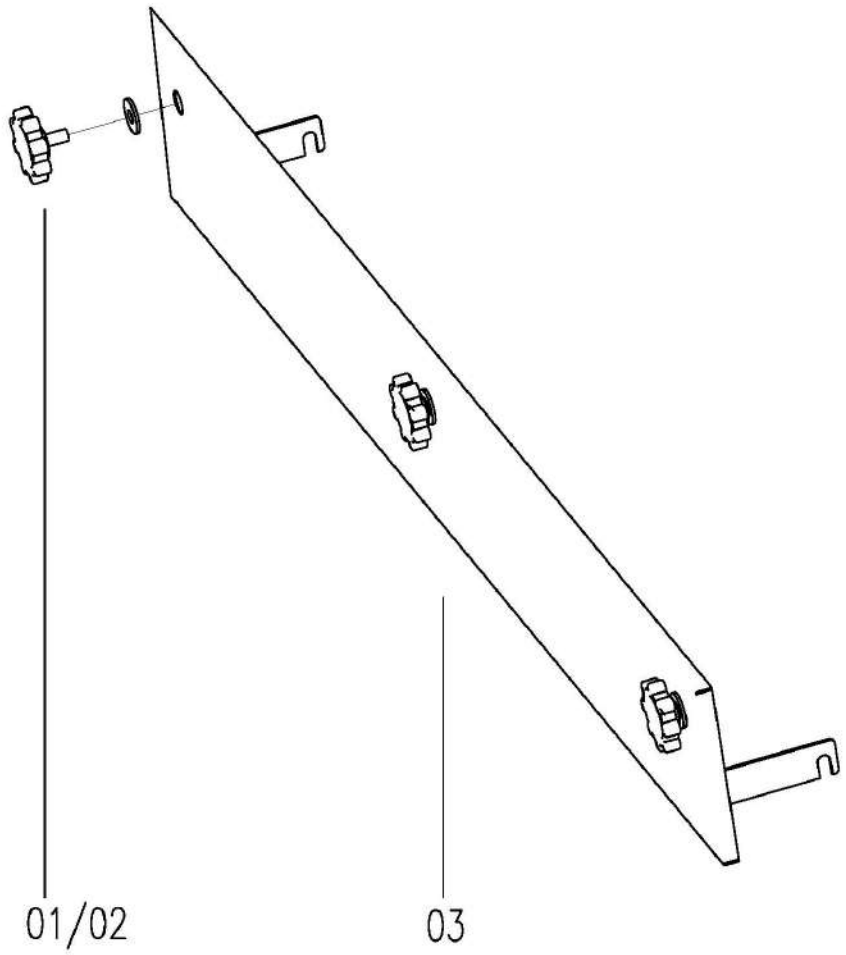

No.	Description	Qty	Part code	Remark
1	Bolt	3	W2.0-01-02-07-00	
2	Washer, Big 8	3	GB/T96-85	
3	Cover Weld	1	W2.5F-04D-18-01-00	

Turn Signal Frame Assy W2.5B-04-35-00

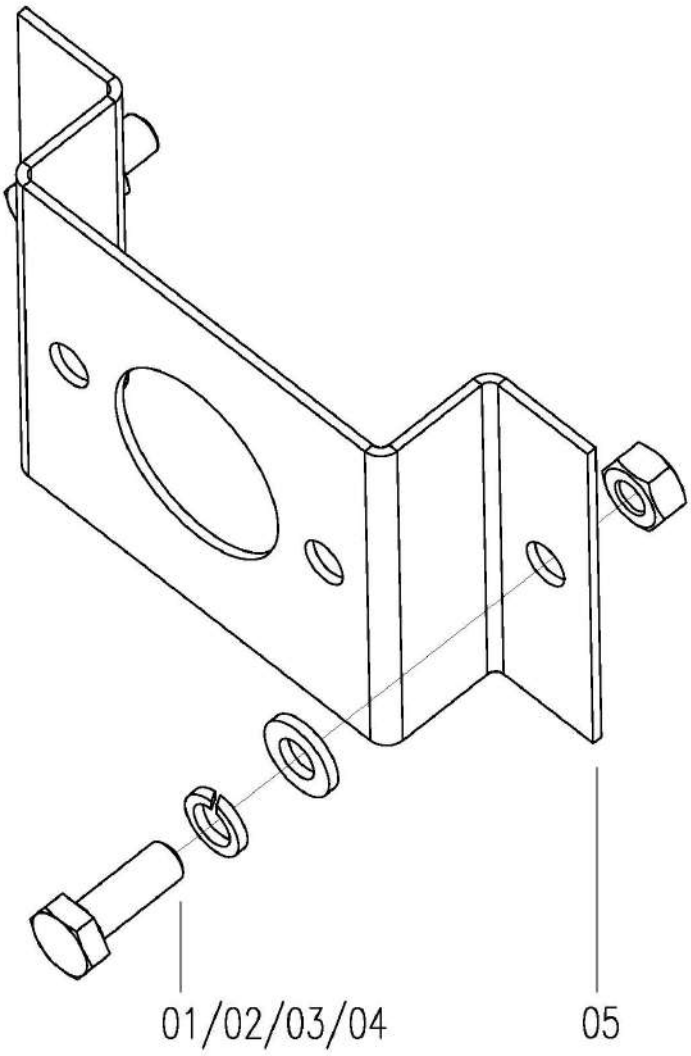

No.	Description	Qty	Part code	Remark
1	Bolt M6 × 16	2	GB/T5783-86	
2	Washer 6	2	GB/T93-87	
3	Washer 6	2	GB/T97.1-85	
4	Nut M6	2	GB/T6170-86	
5	Turn Signal Frame, Rear, Right	1	W2.5B-04-35-01	

Belt Limiter Assy W2.5B-04-19 DC -00

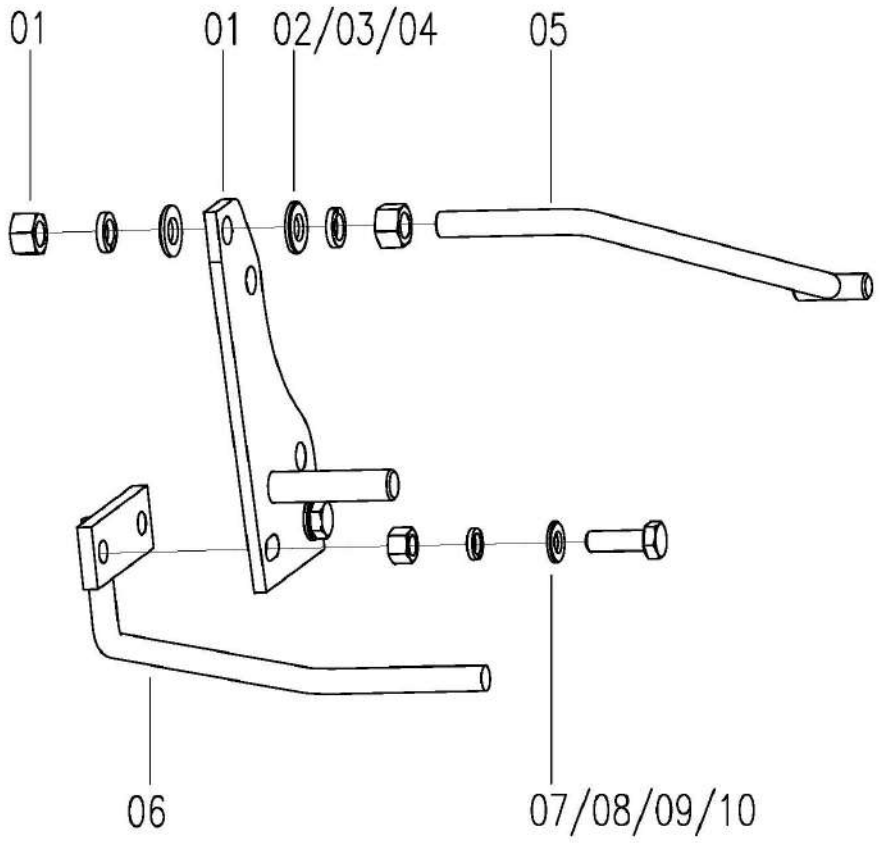

Belt Limiter Assy W2.5B-04-19 DC -00

No.	Description	Qty	Part code	Remark
1	Belt Stopper Weld	1	W2.5B-04-19 DC -01-00	
2	Nut M10	2	GB/T6170-86	
3	Washer 10	2	GB/T97.1-85	
4	Washer 10	2	GB/93-87	
5	Steel Bar Weld, Pressing Belt	1	W2.5B-04-19 DC -02-00	
6	Lower Frame Weld	1	W2.5B-04-19 DC -03-00	
7	Bolt M8X25	2	GB/T5783-86	
8	Washer 8	2	GB/T93-87	
9	Washer 8	2	GB/T97.1-85	
10	Nut M8	2	GB/T6170-86	

Belt Limiter Assy W2.5B-04-19X-00B

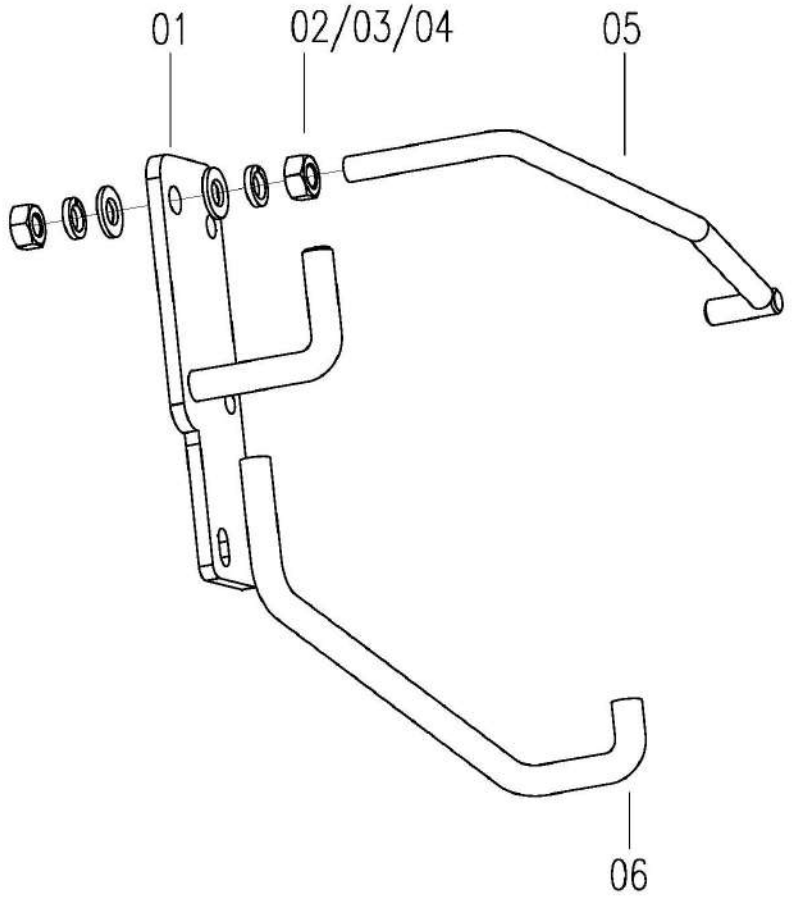

No.	Description	Qty	Part code	Remark
1	Belt Stopper Weld	1	W2.5B-04-19X-01B-00	
2	Nut M10	2	GB/6170-86	
3	Washer 10	2	GB/T97.1-85	
4	Washer 10	2	GB/T93-87	
5	Steel Bar Weld, Pressing Belt	1	W2.5B-04-19X-02-00	

Belt Limiter Assy W2.5B-04-19X-00

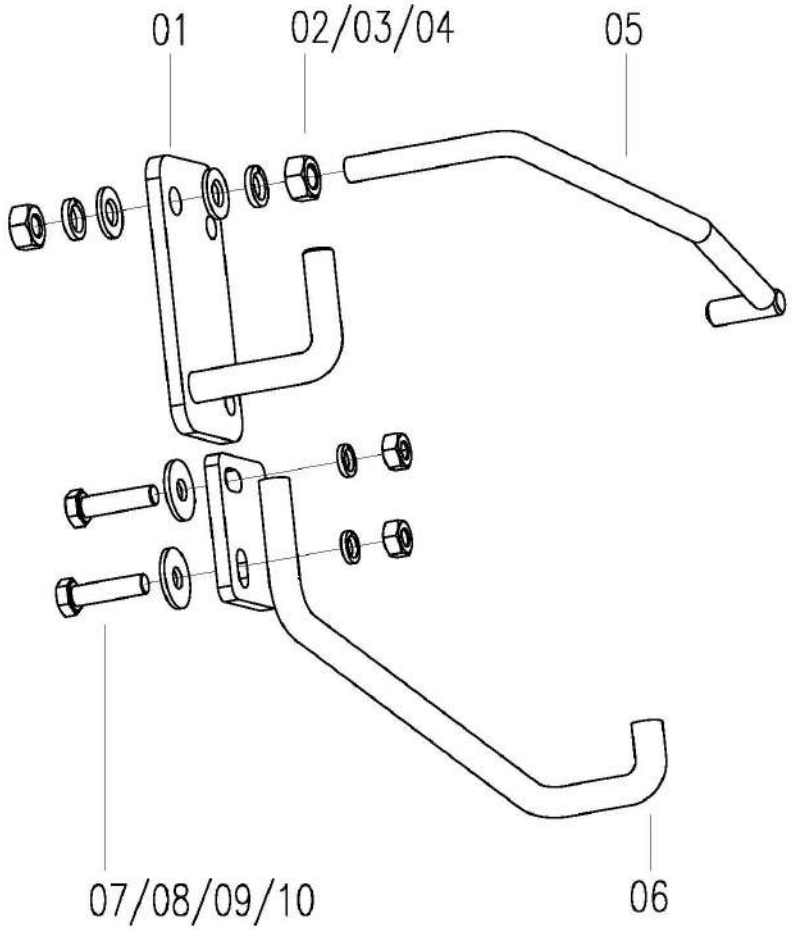

No.	Description	Qty	Part code	Remark
1	Belt Stopper Weld	1	W2.5B-04-19X-01-00	
2	Nut M10	2	GB/6170-86	
3	Washer 10	2	GB/T97.1-85	
4	Washer 10	2	GB/T93-87	
5	Steel Bar Weld, Pressing Belt	1	W2.5B-04-19X-02-00	
6	Lower Frame Weld	1	W2.5B-04-19X-03-00	
7	Nut M8	2	GB/6170-86	
8	Washer 8	2	GB/T93-87	
9	Bolt M8X25	2	GB/T5783-86	
10	Washer 8	2	GB/T96-85	

Limit Belt Holder Assy W2.5B-04BX-19 YG -00D

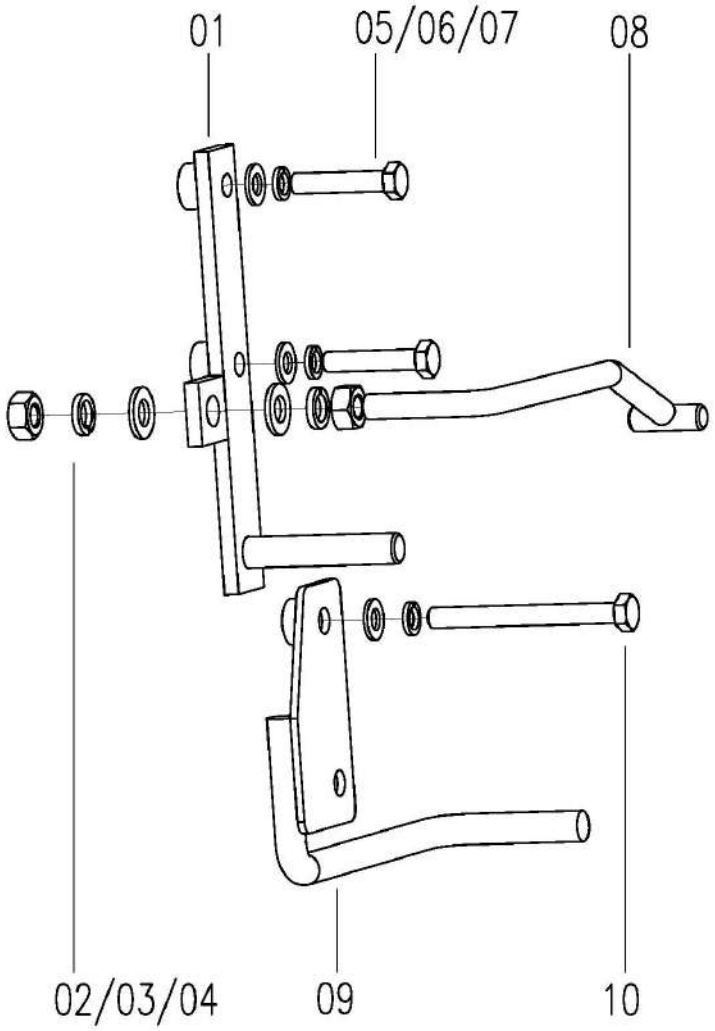

No.	Description	Qty	Part code	Remark
1	Belt Stopper Weld	1	W2.5B-04BX-19 YG -01D-00	
2	Nut M10	2	GB/6170-86	
3	Washer 10	2	GB/T97.1-85	
4	Washer 10	2	GB/T93-87	
5	Bolt M8X40	2	GB/T5783-86	
6	Washer 8	4	GB/T97.1-85	
7	Washer 8	4	GB/93-87	
8	Steel Bar Weld, Pressing Belt	1	W2.5B-04BX-19 YG -02D-00	
9	Frame Assy, Lower	1	W2.5B-04BX-19 YG -03D-00	
10	Bolt M8X90	2	GB/T5782-86	

Limit Belt Holder Assy W5.0-04Q-07YC-00

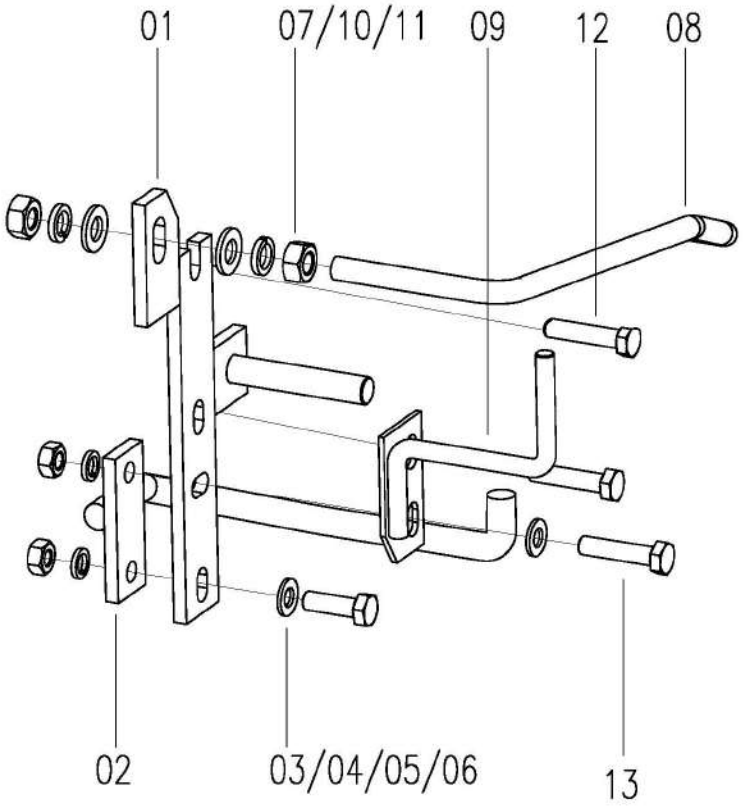

No.	Description	Qty	Part code	Remark
1	Belt Stopper Weld	1	W5.0-04Q-07-01-00	
2	Frame Assy, Lower	1	W2.5B-04-19YC-02-00	
3	Bolt M8X25	1	GB/T5783-86	
4	Washer 8	2	GB/T93-87	
5	Washer 8	2	GB/T97.1-85	
6	Nut M8	2	GB/T6170-86	
7	Nut M10	2	GB/6170-86	
8	Steel Bar, Pressing Belt	1	W2.5B-04-19YC-04-00	
9	Plate Assy	1	W5.0-04Q-07-02-00	
10	Washer 10	2	GB/T97.1-85	
11	Washer 10	2	GB/T93-87	
12	Bolt M8X35	2	GB/T5783-86	
13	Bolt M8X30	1	GB/T5783-86	

Belt Limiter Assy (W5.0-04Q-07-00)

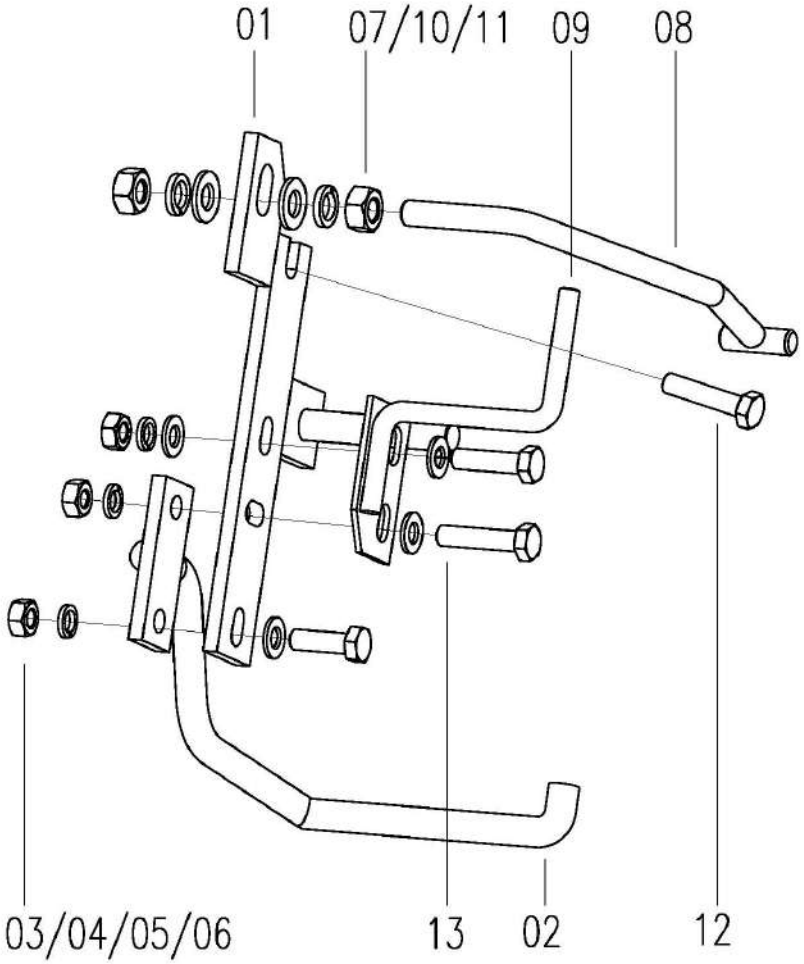

No.	Description	Qty	Part Code	Remark
1	Belt Stopper Weld	1	W5.0-04Q-07-01-00	
2	Lower Frame Weld	1	W2.5B-04-19-02-00	
3	Bolt M8X25	1	GB/T5783-86	
4	Washer 8	2	GB/T93-87	
5	Washer 8	2	GB/T97.1-85	
6	Nut M8	2	GB/T6170-86	
7	Nut M10	2	GB/6170-86	
8	Steel Bar Weld, Pressing Belt	1	W2.0A-04-20-03	
9	Plate Weld	1	W5.0-04Q-07-02-00	
10	Washer 10	2	GB/T97.1-85	
11	Washer 10	2	GB/T93-87	
12	Bolt M8X35	2	GB/T5783-86	
13	Bolt M8X30	1	GB/T5783-86	

Belt Limiter Assy (W2.5B-04BX-19(YG)-00F)

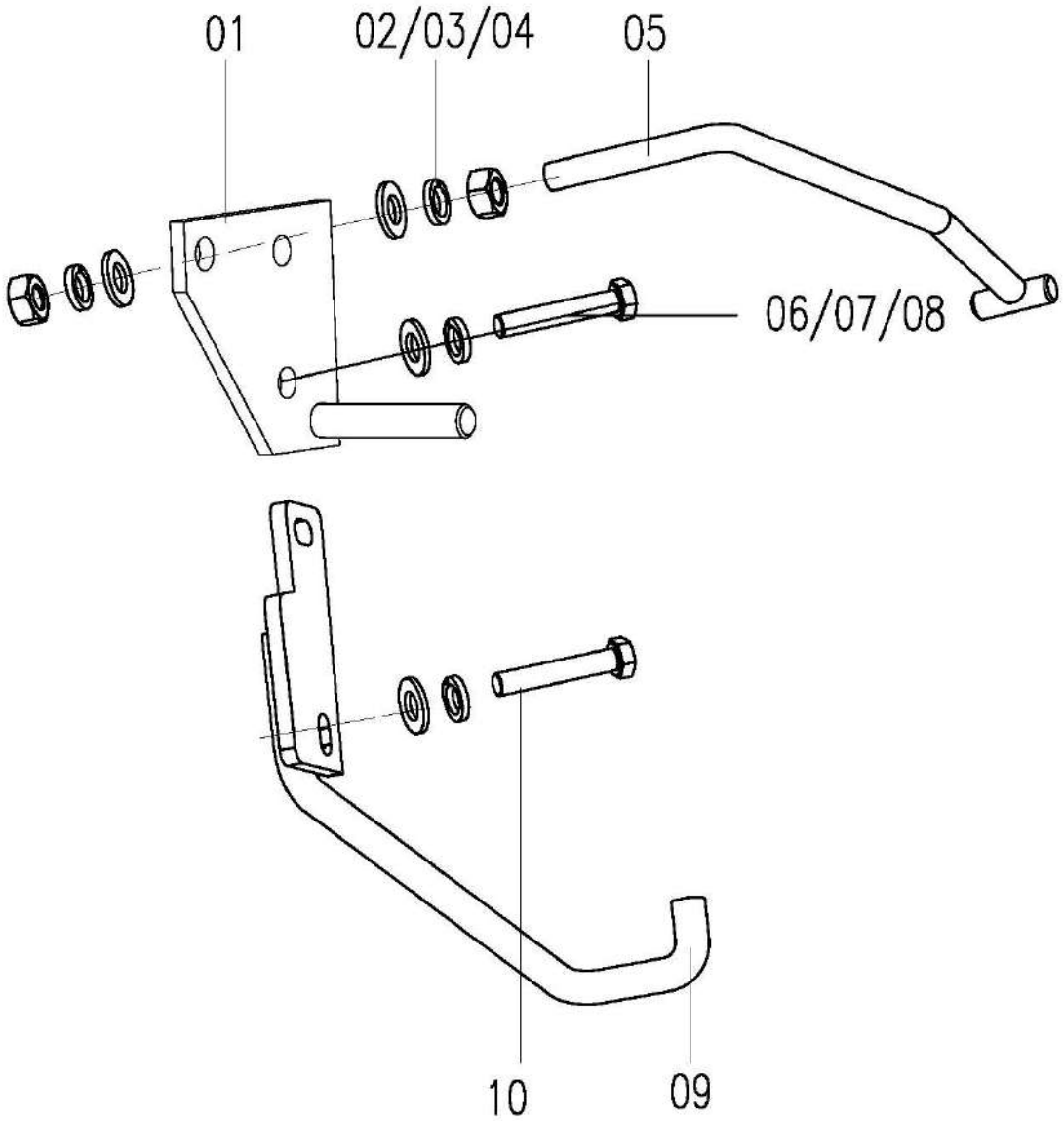

No.	Description	Qty	Part Code	Remark
1	Belt Stopper Weld	1	W2.5B-04BX-19(YG)-01F-00	
2	Washer 10	2	GB/T93-87	
3	Washer 10	2	GB/T97.1-85	
4	Nut M10	2	GB/T6170-86	
5	Steel Bar Weld, Pressing Belt	1	W2.5B-04BX-19(YG)-02F-00	
6	Washer 8	4	GB/T97.1-85	
7	Washer 8	4	GB/T93-87	
8	Bolt M8X60	2	GB/T5783-86	Grade 10.9
9	Lower Frame Weld	1	W2.5B-04BX-19(YG)-03F-00	
10	Bolt M8X85	2	GB/T5783-86	Grade 10.9

Ⅵ. Hydraulic Part

Hydraulic Valve Assy（Cross-region）W2.5X-05D-00

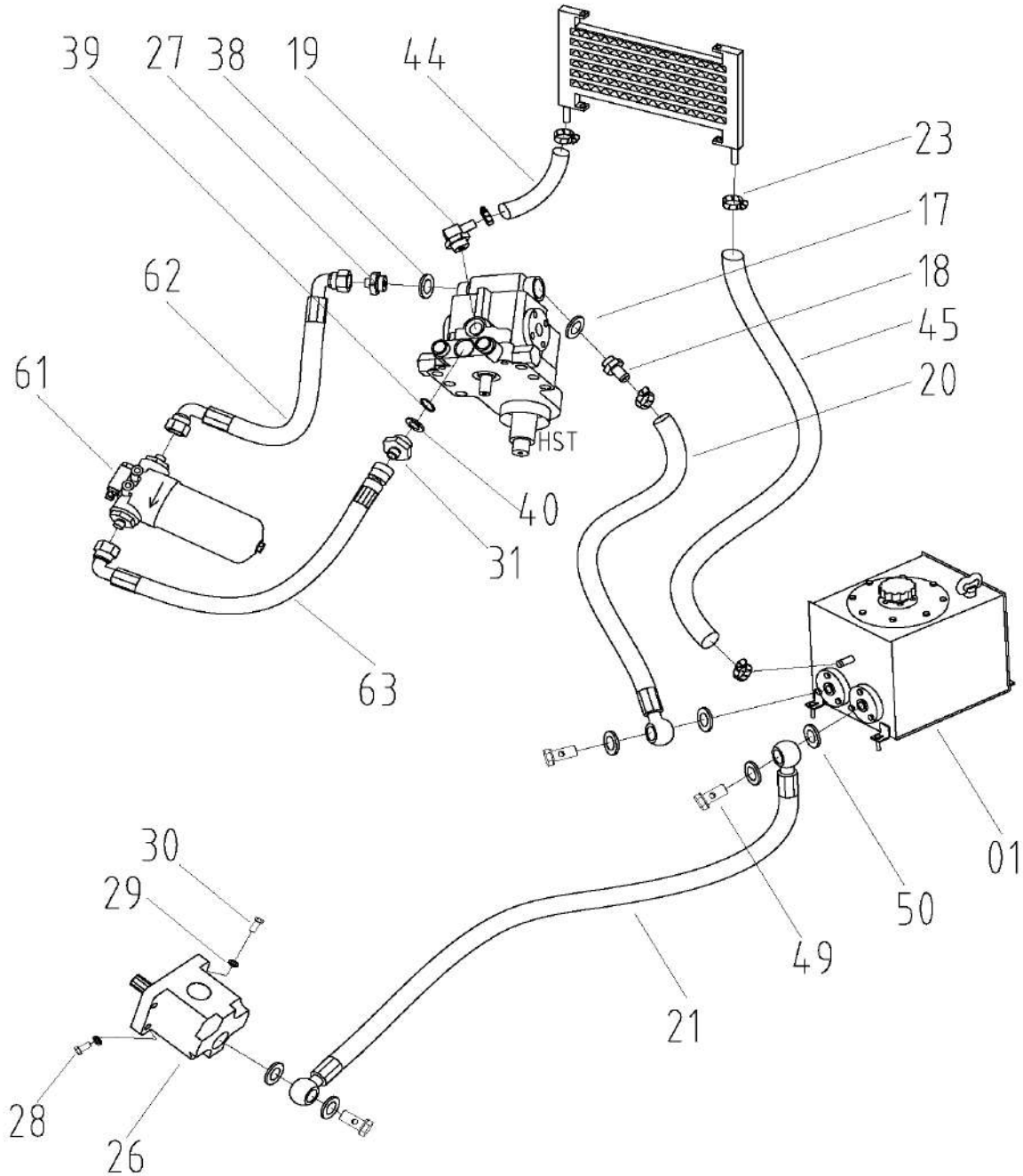

Hydraulic Valve Assy（Cross-region）W2.5X-05D-00				
No.	**Description**	**Qty**	**Part Code**	**Remark**
01	Hydraulic Oil Tank Assy	1	W2.5X-05A-01-00	
02	Oil Returning Hose	1	W2.5X-05A-15-00	
03	Valve, Reel	1	W2.5X-05A-02-00	
04	Oil Tube, Multi-Valve	1	W2.5X-05A-03-00	
05	Washer 18	6	JB982-77	
06	Bolt M18×1.5	3	L1.8A-04-04	
07	Main Oil Tube, Reel	1	W2.5X-05A-04-00	
08	Multifunctional Slide Valve Assy	1	W2.5DD-05DC-17-00C	
09	Main Oil Tube A, Header	1	W2.5X-05A-05-00	
10	Oil Tube Assy, Reel	2	W2.5DD-05DB-06-00	
11	Cylinder, Reel	2	W2.5F-05-10-00B	
12	T Connector	1	W2.5DD-05D-11	
13	Steering Cylinder Assy	1	W2.5DD-05DC-33-00	
14	Right Steering Tube	1	W2.5X-05D-09-00	
15	Left Steering Tube	1	W2.5X-05D-06-00	
16	Steering Tubing, Oil Return	1	W2.5X-05D-07-00	
17	Combination Washer 27	1	JB982-77	
18	Connector, Oil Inlet	1	WD.7M-02	
19	Connector, Oil Outlet	1	W2.0-05-30-00	
20	Oil Inlet Pipe Assy, HST	1	W2.5DD-05DC-14-00	
21	Oil Inlet Pipe Assy, Gear Pump	1	W2.5DD-05DC-12-00	
22	Oil Inlet Pipe, Valve	1	W2.5X-05A-09-00	
23	Hose Clamp, Steel	8	20-32	
24	Left Oil Separator Tube, Reel	1	W2.5X-05D-04-00	Suit for 2.1m
25	Connector, Oil Pipe, Steering Cylinder	3	W2.5DD-05D-09	
26	Involute gear pump	1	W2.5DD-05DC-09-00E	
27	Connector, Oil Outlet, Oil Filling Pump	1	W2.0-05(R)-34	
28	Bolt M8×30	2	GB70-85	
29	Washer 8	6	GB93-87	
30	Bolt M8×35	2	GB/T70	
31	Connector, HST	1	W2.0-05(R)-35	
32	Oil Returning Pipe	1	W2.5DD-05DB-14	
33	Valve, Grain Unloading	1	W2.5DD-05DC-16-00	
34	Oil Tube Assy, Combination Valve	1	W2.5X-05A-10-00	
35	Hose, Grain Unloading	1	W2.5X-05D-08-00	
36	Cylinder, Grain Unloading	1	W2.5DD-05GX-02-00EC	
37	Single Clip 8	4	W2.5DD-05GX-04	
38	Combination Washer 21	1	JB982-77	
39	Seal Washer 20	1	JB1002-77	
40	O-ring 14×2.65	1	GB3452.1-83	

W2.5X-05D-00 Hydraulic Valve Assy（Cross-region）

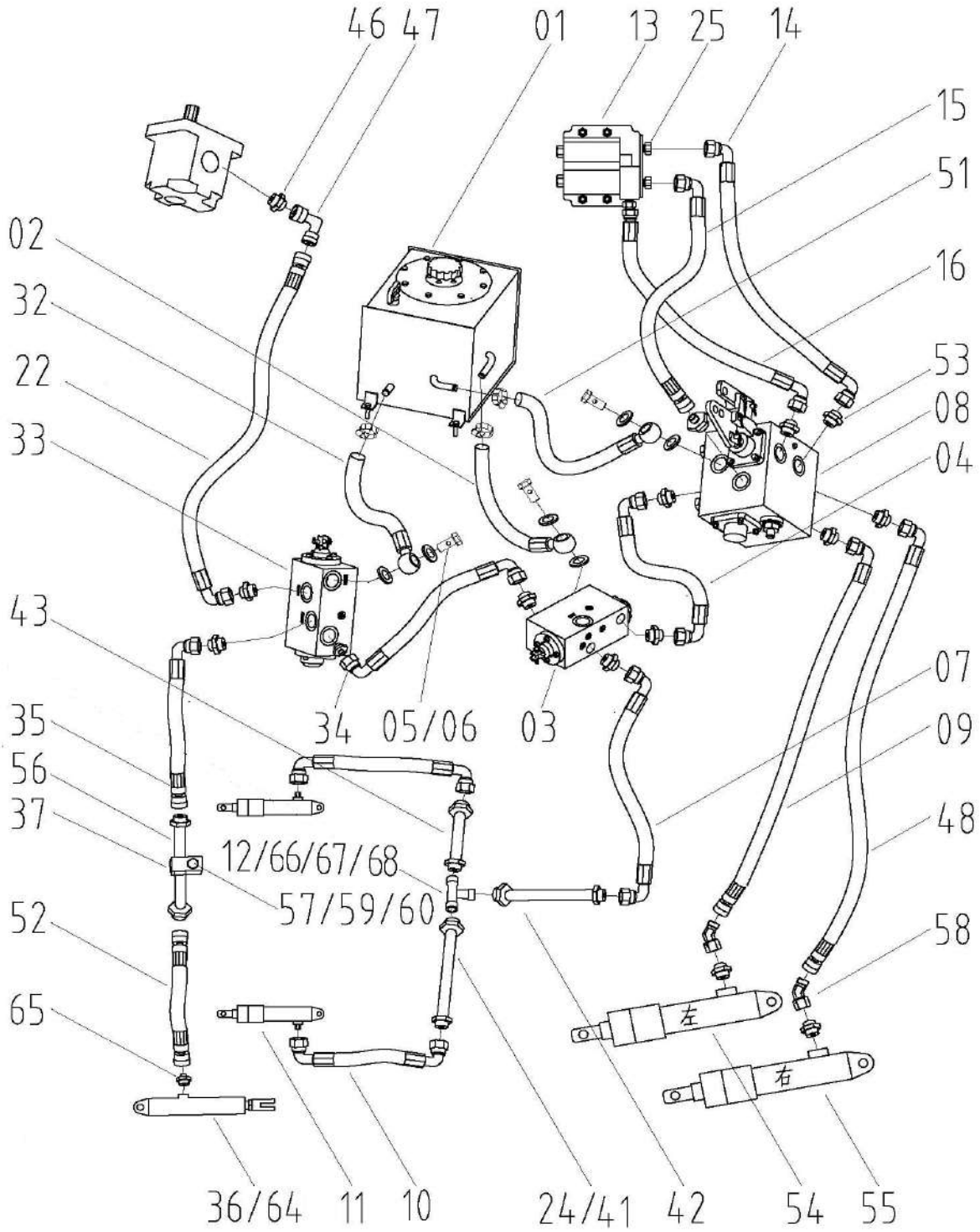

Hydraulic Valve Assy（Cross-region）W2.5X-05D-00				
No.	**Description**	**Qty**	**Part Code**	**Remark**
41	Left Oil Separator Tube, Reel	1	W3.5-05MD-01-00M	2.2 m
42	Main Oil Tube, Reel	1	W2.5X-05D-03-00	
43	Right Oil Separator Tube, Reel	1	W2.5DD-05D-02-00A	2.1/2.2m
44	Oil Inlet Pipe, Cooler	1	W2.5DA-05D-15	
45	Oil Returning Pipe, Cooler	1	W2.5DA-05D-16A	
46	Connector M18×1.5	8	W3.5-05MD-03-00	
47	Right Angle Connector M18×1.5	1	W3.5-05MD-04-00	
48	Oil Tube B, Header Cylinder	1	W2.5X-05-10-00	
49	Bolt M22×1.5	3	W2.5DD-05DC-13	
50	Washer 22	6	JB982-77	
51	Oil Return Tube	1	W2.5E-05GB-16-00	
52	Hose, Grain Unloading	1	W2.5X-05A-14-00A	
53	Connector, M18X1.5 to M4X1.5	5	W3.5-05MD-02-00	
54	Cylinder, Header	1	W2.5X-05D-02-00M	
55	Cylinder, Header	1	W2.5X-05D-01-00M	
56	Oil Tube, Grain Unloading	1	W2.5X-05D-05-00	
57	Bolt M8×40	2	GB5783	
58	135°Joint M18X1.5	2	W3.5-05MD-16-00	
59	Nut M8	2	GB/T6170	
60	Big Washer, Plain 8	2	GB/T96	
61	Oil Filter Assy	1	W2.5M-05M-18-00	
62	Oil Pipe, Oil Filter, Oil Inlet Pump	1	W2.5X-05F-01-00	
63	Filter, HST Oil Inlet Tube	1	W2.5X-05F-02-00A	
64	Cylinder, Grain Unloading	1	W2.5DD-05GX-02-00ED	
65	Cylinder Joint, Grain Unloading	1	W3.5-05MD-19-00	
66	Quick change connectors M14×1.5	1	KZE.2-6	
67	Combination Washer 14	1	JB982-77	
68	Connector	1	W2.5X-05D-14	

Hydraulic Oil Tank Assy W2.5X-05A-01-00

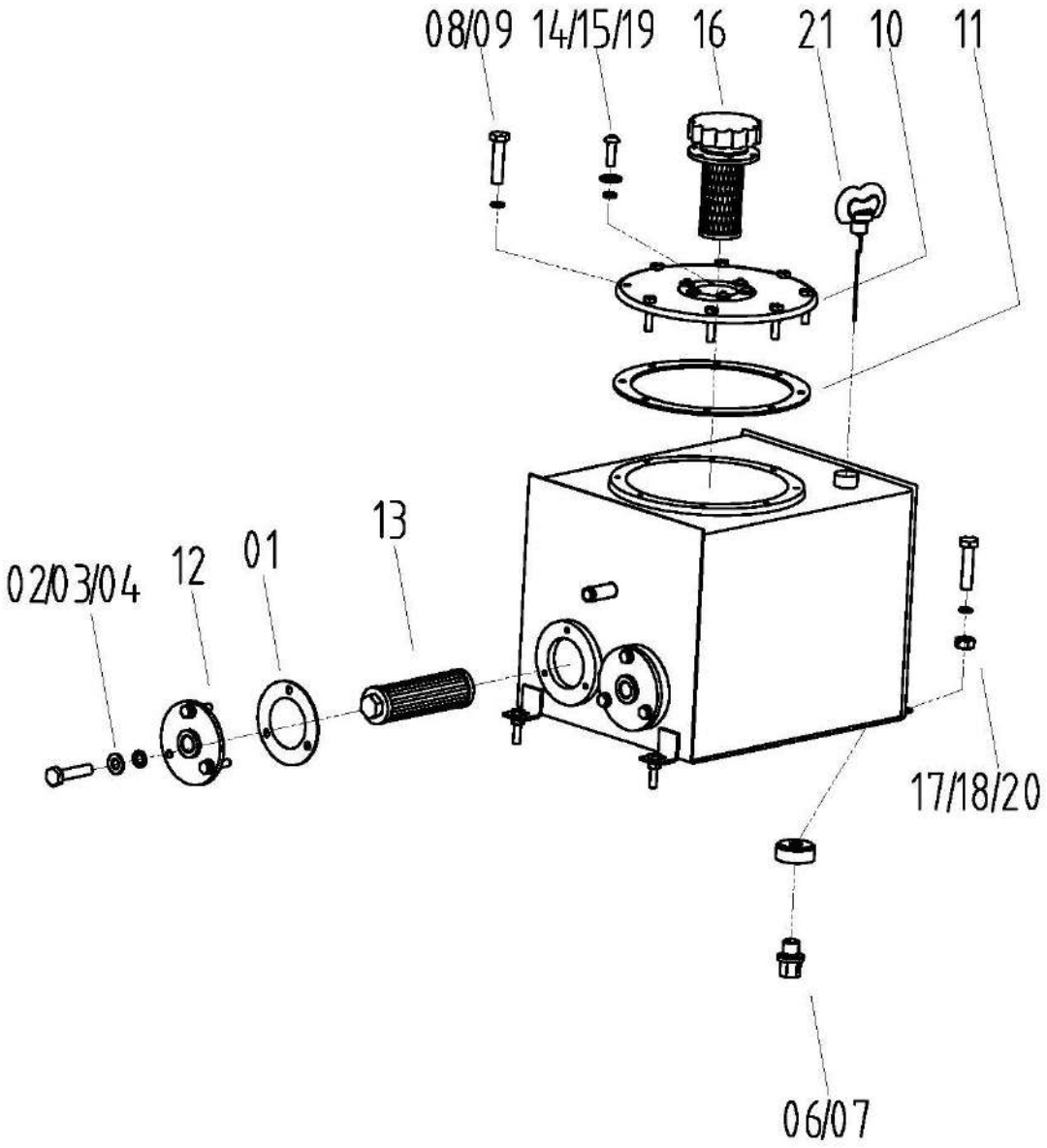

Hydraulic Oil Tank Assy W2.5X-05A-01-00

No.	Description	Qty	Part Code	Remark
01	Sealing Gasket, Connecting Plate, Oil Outlet Filter	2	L1.8A-04-01-01-06	
02	Bolt M8×20	6	GB/T5783-86	
03	Washer 8	10	GB/T93-87	
04	Washer 8	6	GB/T97.1-85	
05	Hydraulic Oil Tank	1	W2.5X-05A-01-01-00	
06	Washer 12	1	JB/T1002-77	
07	Hex Plug	1	W2.5DD-05DC-21	
08	Bolt M6×16	8	GB/T5783-86	
09	Washer 6	8	GB/T93-87	
10	Flange Weld	1	W2.5DD-05DB-01-07-00B	
11	Flange Weld	1	W2.0-05-01-02A	
12	Connecting Plate, Oil Outlet Filter	2	W2.5DD-05DB-01-02-00	
13	Filter	2	W2.5DD-05DB-01-03A	
14	Screw M5×12	6	GB/T70	
15	Washer 5	6	GB/T93-87	
16	Cover, Hydraulic Oil Tank	1	W1.8E-05-14-02-00	
17	Nut M8	4	GB/T6170-86	
18	Washer 8	8	GB/T96-85	
19	Washer, plain Φ5	6	GB/T97.1	
20	Bolt M8×25	4	GB/T5783-86	
21	Hydraulic Oil Dipstick	1	W2.5X-05A-01-02-00	

Reel Valve Assy W2.5X-05A-02-00

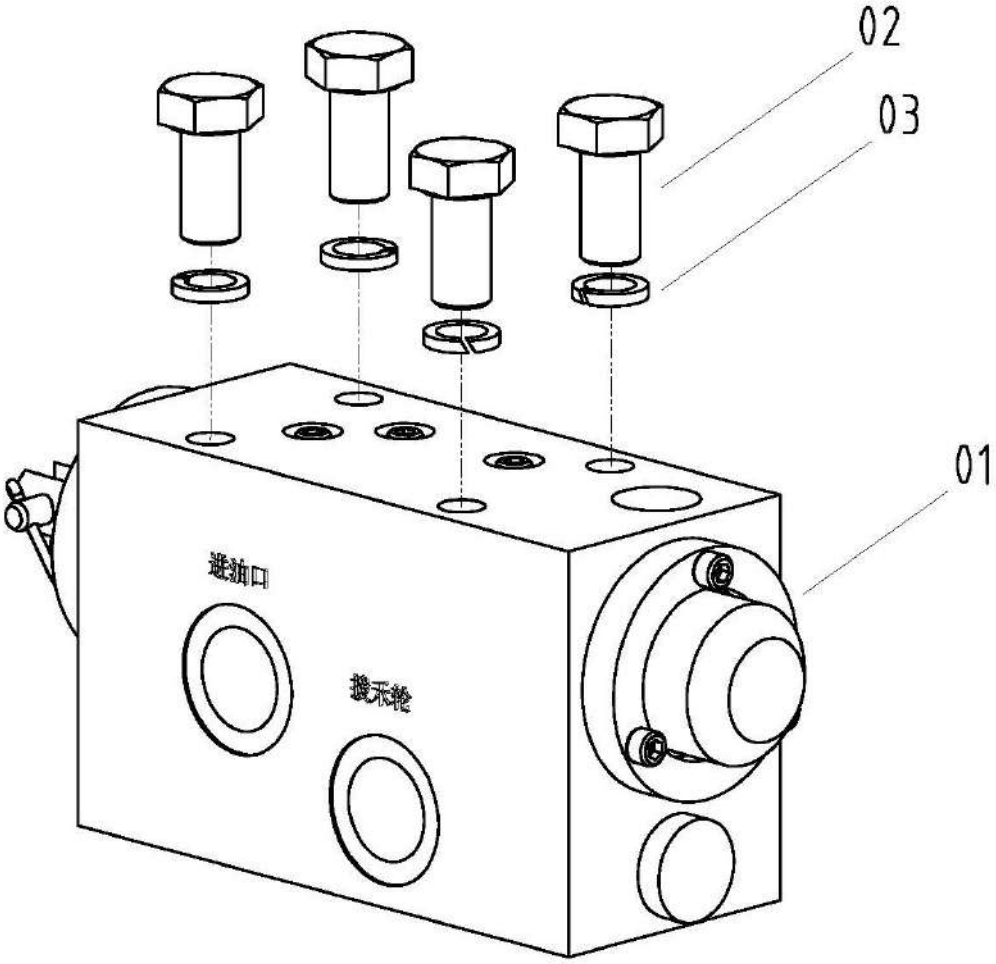

No.	Description	Qty	Part Code	Remark
01	Reel Valve	1	W2.5DD-05DC-15-01	
02	Bolt M8×16	4	GB/T5783	
03	Washer 8	4	GB/T93	

Unloading Valve Assy W2.5DD-05DC-16-00

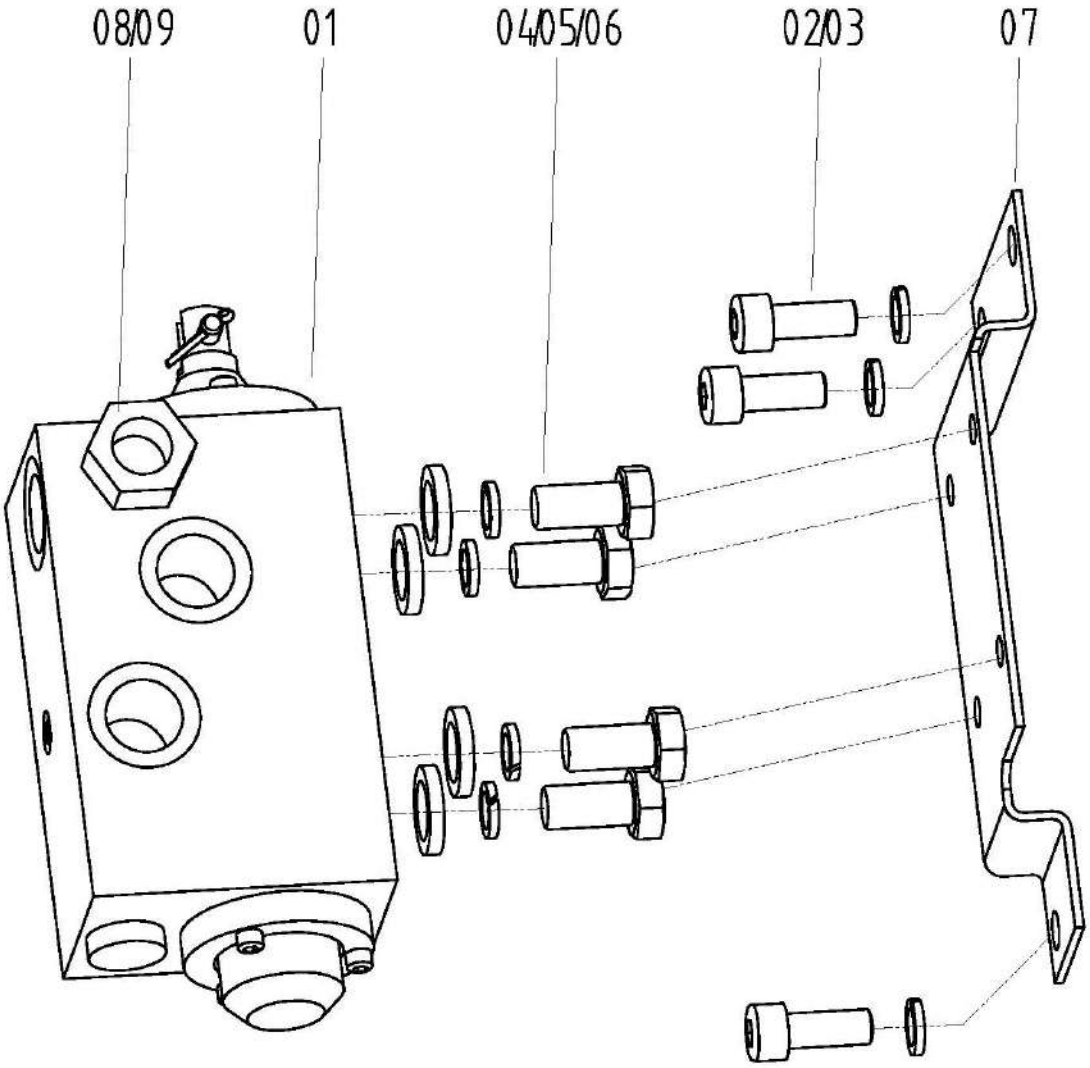

No.	Description	Qty	Part Code	Remark
1	Grain Unloading Valve	1	W2.5DD-05DC-16-01	
2	Screw M8×20	3	GB/T70	
3	Washer 8	3	GB/T93	
4	Bolt M6×16	4	GB/T5783	
5	Washer 6	4	GB/T93	
6	Washer 6	4	GB/T97.1	
7	Frame, Valve	1	W2.5DD-05DC-16-05	
8	General Connector	1	W2.5DD-05DB-33	
9	Washer 18	1	JB/T982	

Multifunctional Slide Valve W2.5DD-05DC-17-00C

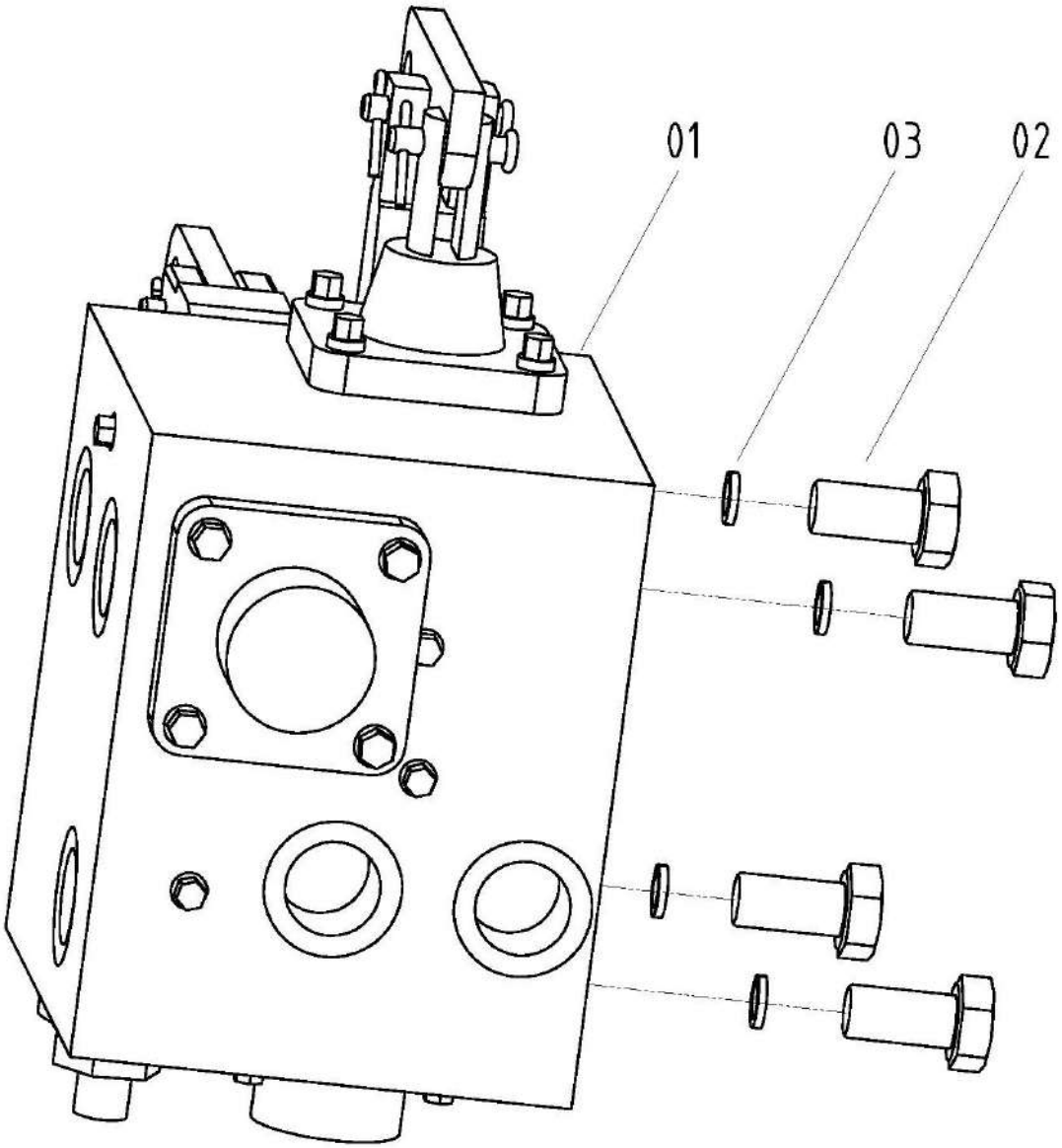

No.	Description	Qty	Part Code	Remark
1	Multifunctional Slide Valve	1	W2.5DD-05DC-17-01C	
2	Bolt M6×16	4	GB/T5783-86	
3	Washer 6	4	GB/T93-87	

Oil Filter Assy W2.5M-05M-18-00

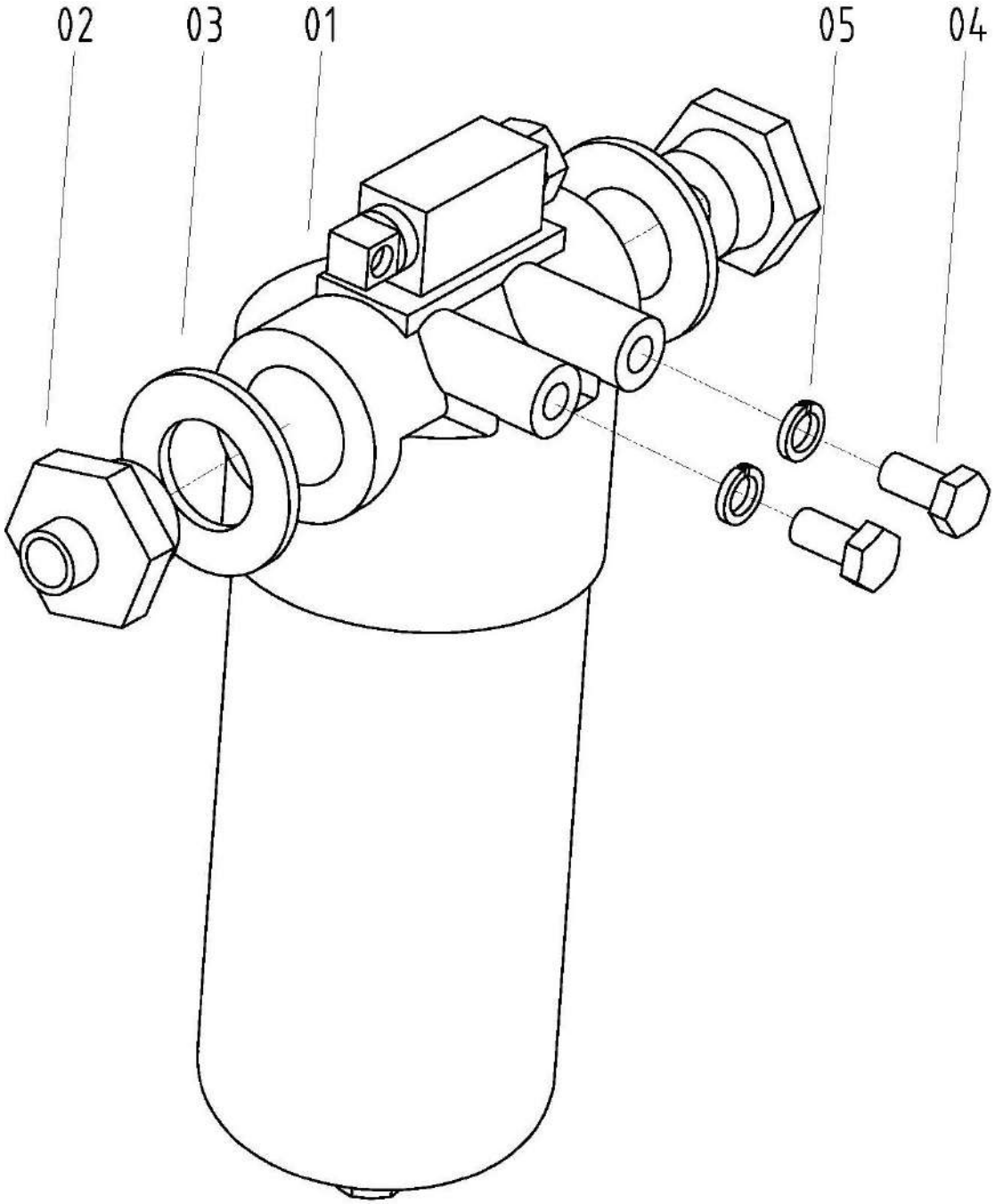

No.	Description	Qty	Part Code	Remark
1	HST Oil Filter	1	W2.5M-05M-18-01	
2	Connector, Oil Filter	2	W2.0-05(R)-38-02	
3	Washer 33	2	JB/T982	
4	Bolt M10×20	2	GB/T5783	
5	Washer 10	2	GB/T93	

Steering Cylinder Assy W2.5DD-05DC-33-00

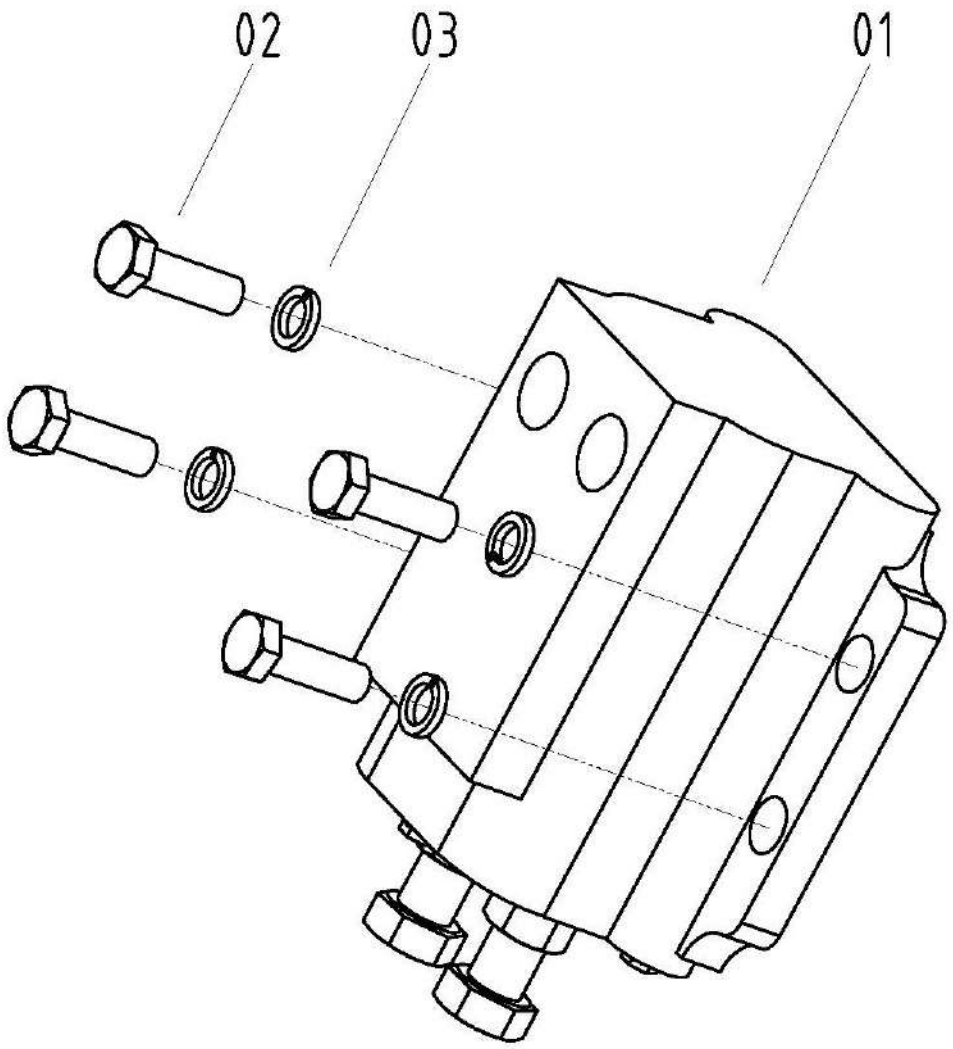

No.	Description	Qty	Part code	Remark
1	Steering Cylinder	1	W2.0-05-33	
2	Bolt M8*25	4	GB/T5783	
3	Washer 8	4	GB/T93	

XI. Operation Part

Operation Assy W3.5H-07B-00

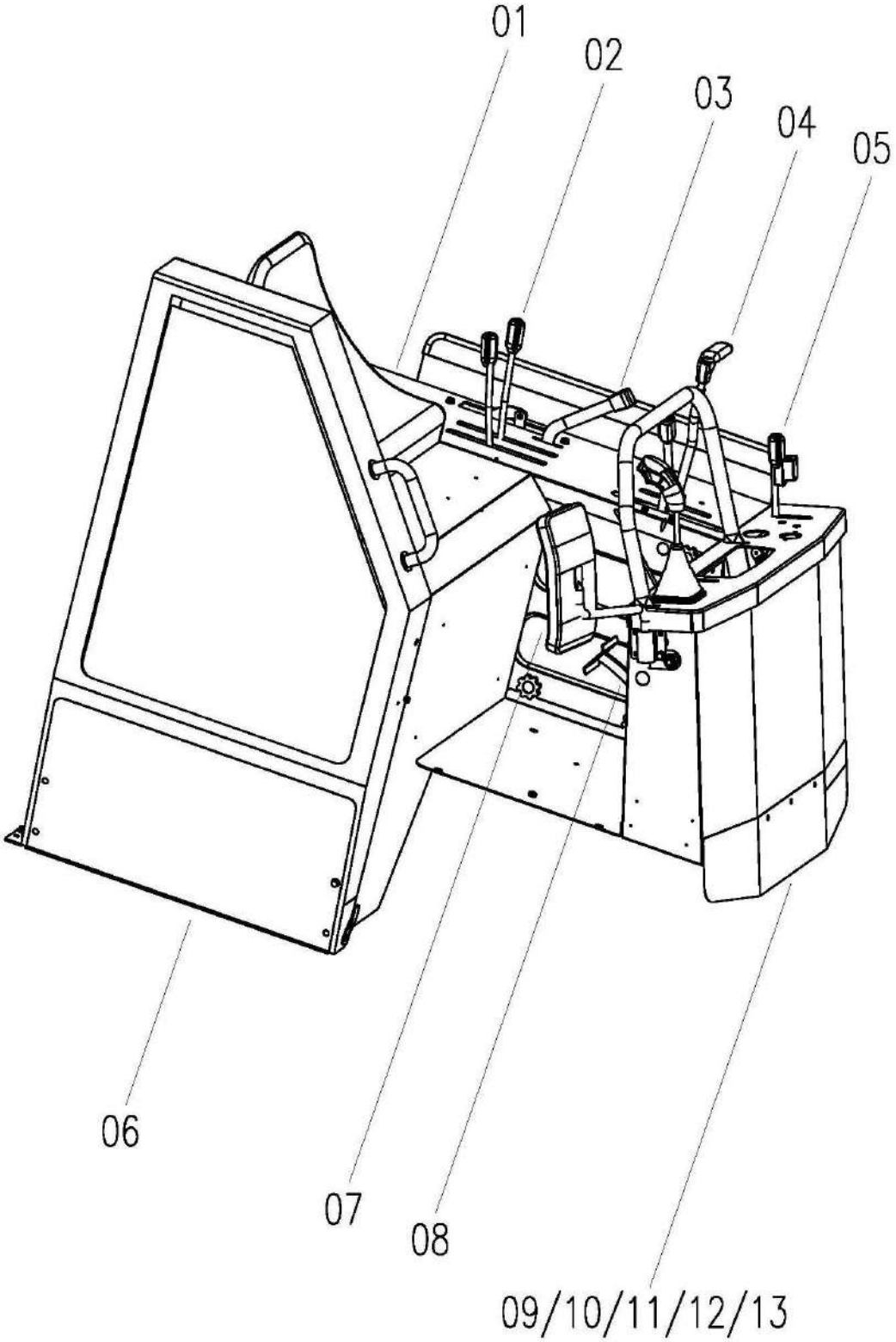

Operation Assy W3.5H-07B-00

No.	Description	Qty	Part code	Remark
1	Operation Platform Assy	1	W3.5H-07B-01-00	
2	Clutch Lever	1	W2.5H-07-05-00	
3	Throttle	1	W2.5DA-07E-08-00	
4	Main and Auxiliary Shift	1	W3.5H-07B-04-00	
5	Main and auxiliary Lever	1	W3.5H-07B-02-00	
6	Engine dust cover	1	W3.5H-07X-06-00	
7	Side Mirror	1	W2.0-01-11-00	
8	Brake	1	W3.5H-07B-03-00	
9	Baffle Plate, Front	1	W2.5H-07-11A	
10	Bolt M6×16	5	GB/T5783	
11	Washer 6	5	GB/T93	
12	Washer 6	5	GB/T96	
13	Nut M6	5	GB/T6170	

Operation Platform Assy W3.5H-07B-01-00

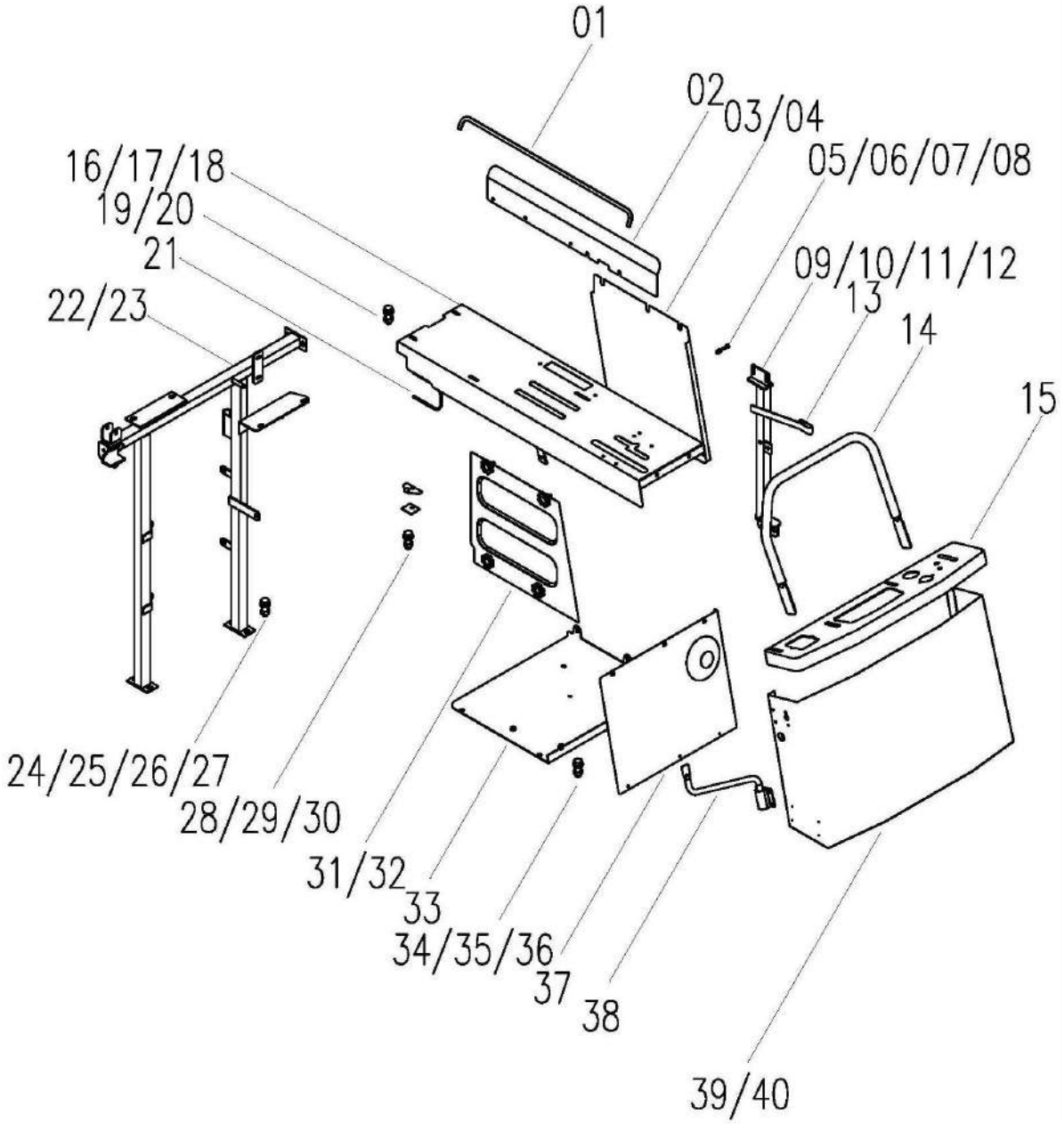

Operation Platform Assy W3.5H-07B-01-00				
No.	**Description**	**Qty**	**Part code**	**Remark**
01	Hook Plate	1	W2.5H-07-01-19	
02	Plate	1	W2.5H-07-01-18	
03	Plate	1	W2.5H-07-01-05-00	
04	Sponge Strip	On demand	W2.5H-07J-01-24	
05	Bolt M6×16	16	GB/T5783	
06	Washer 6	17	GB/T93	
07	Washer 6	11	GB/T96	
08	Nut M6	6	GB/T6170	
09	Shifting Frame weld	1	W3.5H-07B-01-06-00	
10	Bolt M8×30	2	GB/T5783	
11	Nut M8	15	GB/T6170	
12	Washer 8	24	GB/T96	
13	Spring Plate	1	W2.5DA-07KC-01-14	
14	armrest	1	W2.5H-07-01-08	
15	Plate	1	W2.5H-07-01-17	
16	Operation Platform Weld	1	W2.5H-07J-01-02A-00	
17	Guide panel	1	W2.5H-07-01-20	
18	Rivet 4×12	7	GB/T12618	
19	Bolt M8×25	11	GB/T5783	
20	Circle	4	W2.0-02-17-03	
21	Tube		W2.5DA-07K-01-25	
22	Support frame welding	1	W2.5D-07Y-01-01-00	
23	Bolt M10×25	2	GB/T5783	
24	Bolt M10×60	1	GB/T5782	
25	Washer 10	3	GB/T93	
26	Nut 10	1	GB/T6170	
27	Washer 10	1	GB/T96	
28	hook	1	W2.5DA-07G-01-20	
29	Plate	1	W2.5DA-07G-01-23	
30	Bolt M8×20	1	GB/T5783	
31	Plate	1	W2.5H-07J-01-14-00	
32	Bolt	4	W2.0-01-02-07-00	
33	Pedal	1	W3.5H-07J-01-12	
34	Bolt M8x20	19	GB/T5783	
35	Washer 8	34	GB/T93	
36	Washer 8	13	GB/T97.1	
37	Plate	1	W2.5H-07J-01-11-00	
38	Rear Mirror	1	W2.5H-07-01-16-00A	
39	Main Clutch Box Weld	1	W2.5H-07B-01-09-00	
40	Toolbox assembly	1	WD.31A	

W3.5H-07B-02-00 Main/Auxiliary Shift Handle

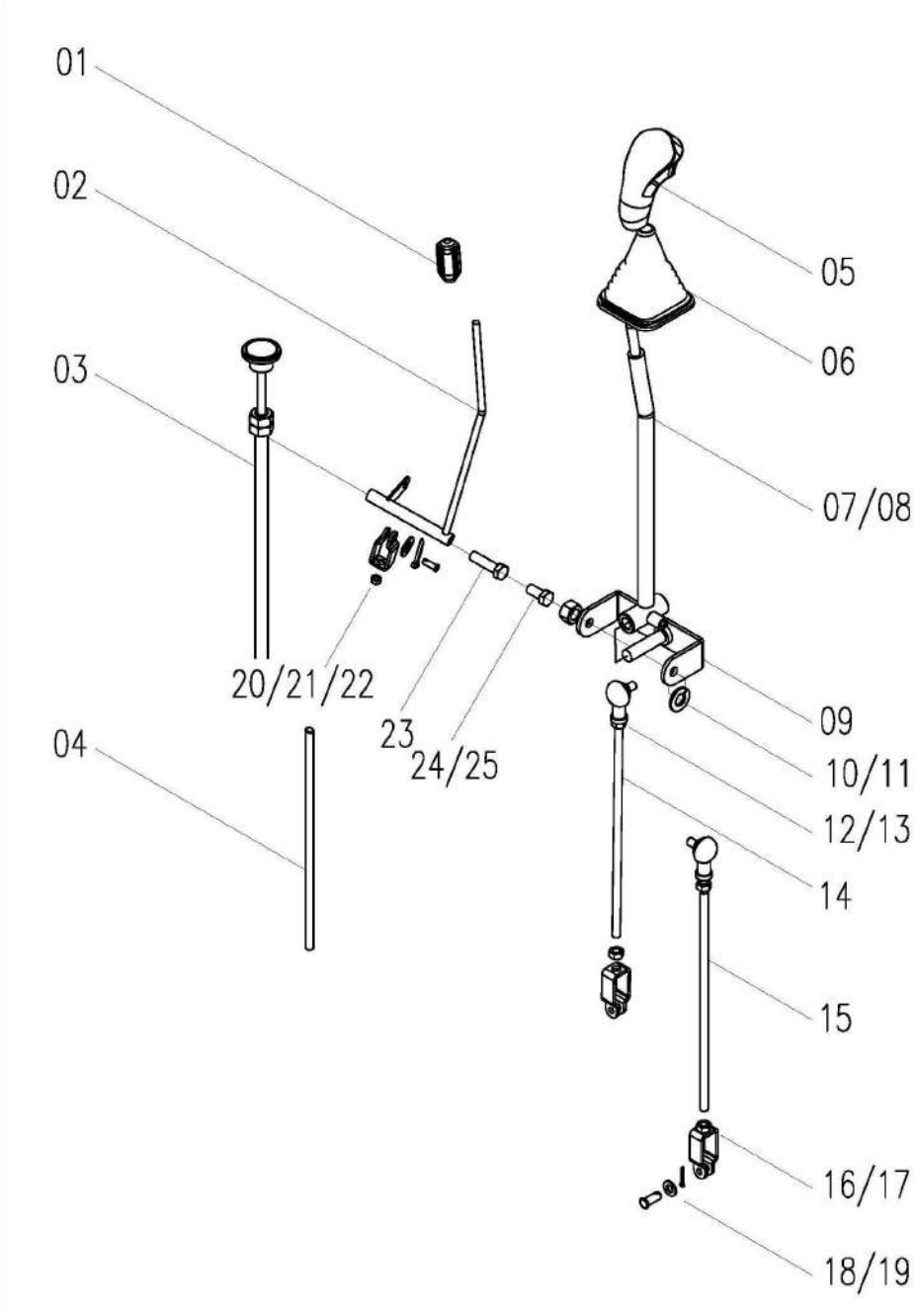

W3.5H-07B-02-00 Main/Auxiliary Shift Handle

No.	Description	Qty	Part code	Remark
01	Lever, Clutch	1	W2.5DA-07E-05-01	
02	Lever, Auxiliary Operation	1	W2.5H-07J-02-06-00	
03	Flameout Wire	1	W2.0-07-02-08-00	
04	Rod, Reel Lifting	1	W2.5H-07-02-05	
05	Lever, Main Operation	1	W2.5H-07-02-19	
06	Sleeve	1	W2.0-07-02-06	
07	Lever, Main Operation	1	W2.5H-07-02-01-00	
08	Lever, Main Operation	1	W2.5H-07-02-01-00A	
09	Swivel mount weld	1	W2.5H-07-02-02-00	
10	Washer 10	6	GB/T97.1	
11	Washer 10	4	GB/T93	
12	Bearing SQ10C-RS	2	JB5306-91	
13	Nut M10	7	GB/T6170	
14	Rod, Header Lifting	1	W2.5H-07-02-04	
15	Steering Rod	1	W2.5H-07-02-03	
16	Connecting Fork	2	W2.5H-07J-02-21	
17	Pin Shaft B10*20	2	GB/T882	
18	Pin 2.5*25	2	GB/T91	
19	Washer, Big 10	1	GB/T96	
20	Connecting Fork	1	W2.5H-07J-04-09-00	
21	Pin Shaft B10*20	1	GB/T882	
22	Pin 2.5*25	1	GB/T91	
23	Bolt M12×170	1	GB/T5782	
24	Bolt	1	W2.5D-07-02-18	
25	Nut M12	2	GB/T6170	

Brake Locking W3.5H-07B-03-00

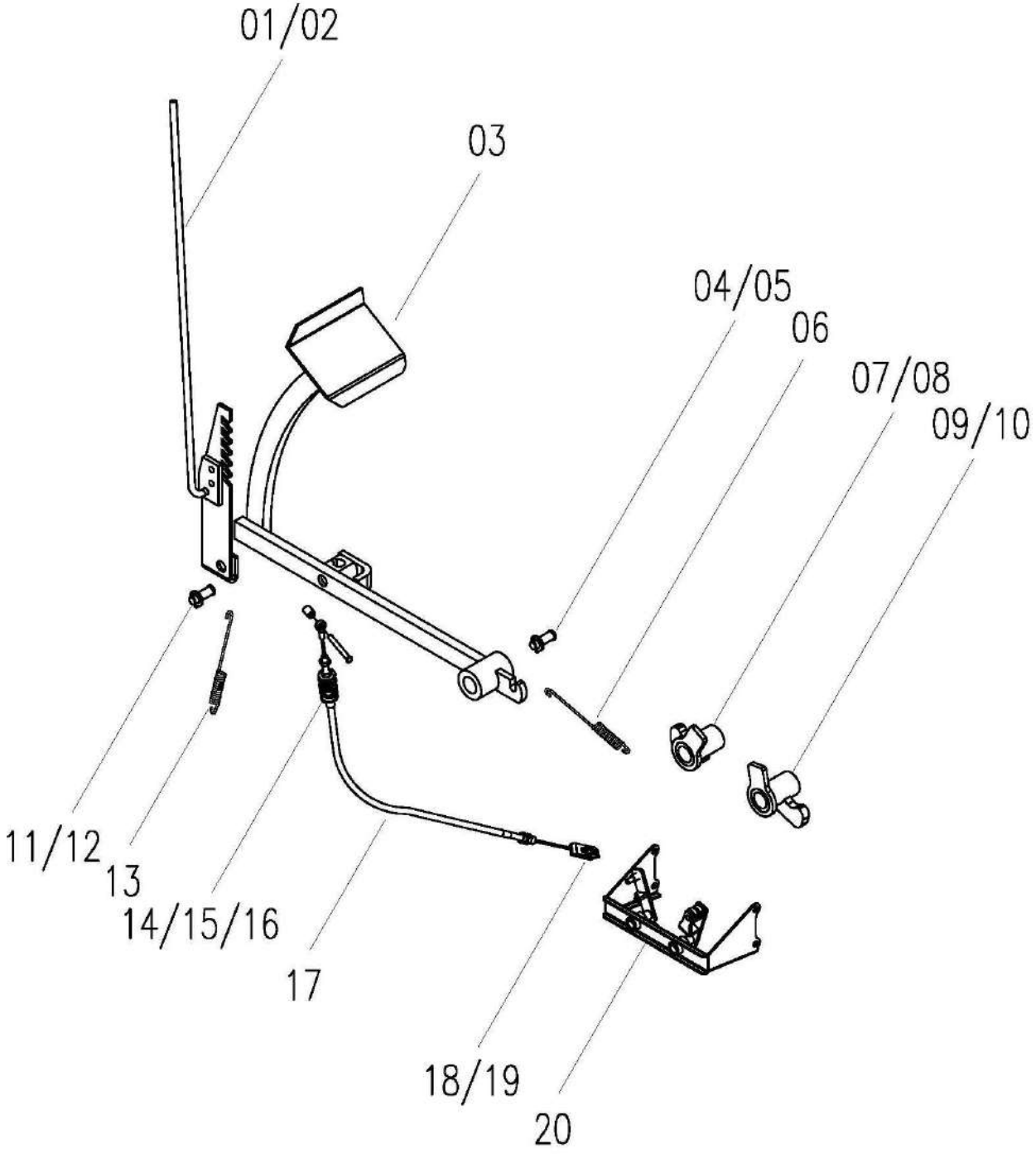

Brake Locking W3.5H-07B-03-00

No.	Description	Qty	Part code	Remark
01	Break Locking	1	W2.5-07-03-01-00	
02	Locking screw	1	W2.5H-07-03-15	
03	Locking Pedal	1	W3.5H-07B-03-05-00	
04	Pin 3.2*24	1	GB/T 91	
05	Washer 16	1	GB/T 97.1	
06	Spring, Pedal	1	W2.5-07-03-06	
07	Swing Arm, right	1	ZKB40-206a-401-2-00S	
08	Swing Arm, left	1	ZKB40-206a-401-1-00S	
09	Pin 5*30	2	GB/T879	
10	Pin 8*30	2	GB/T879	
11	Washer 10	1	GB/T97.1	
12	Pin 2.5*20	1	GB/T91	
13	Spring	1	W2.0-07-03-02	
14	Pin Shaft 8*20 B Type	1	GB/T882-86	
15	Pin 2.5*26	1	GB/T91	
16	Washer 8	1	GB/T97.1	
17	Breaking Wire	1	W2.5H-07-03-04-00	
18	Washer, Plain 8	1	GB/T97.1	
19	Pin 2.5*25	1	GB/T91	
20	Fixed Seat	1	W2.5-07D-03-12-00	

Main/Auxiliary Shift Handle W3.5H-07B-04-00

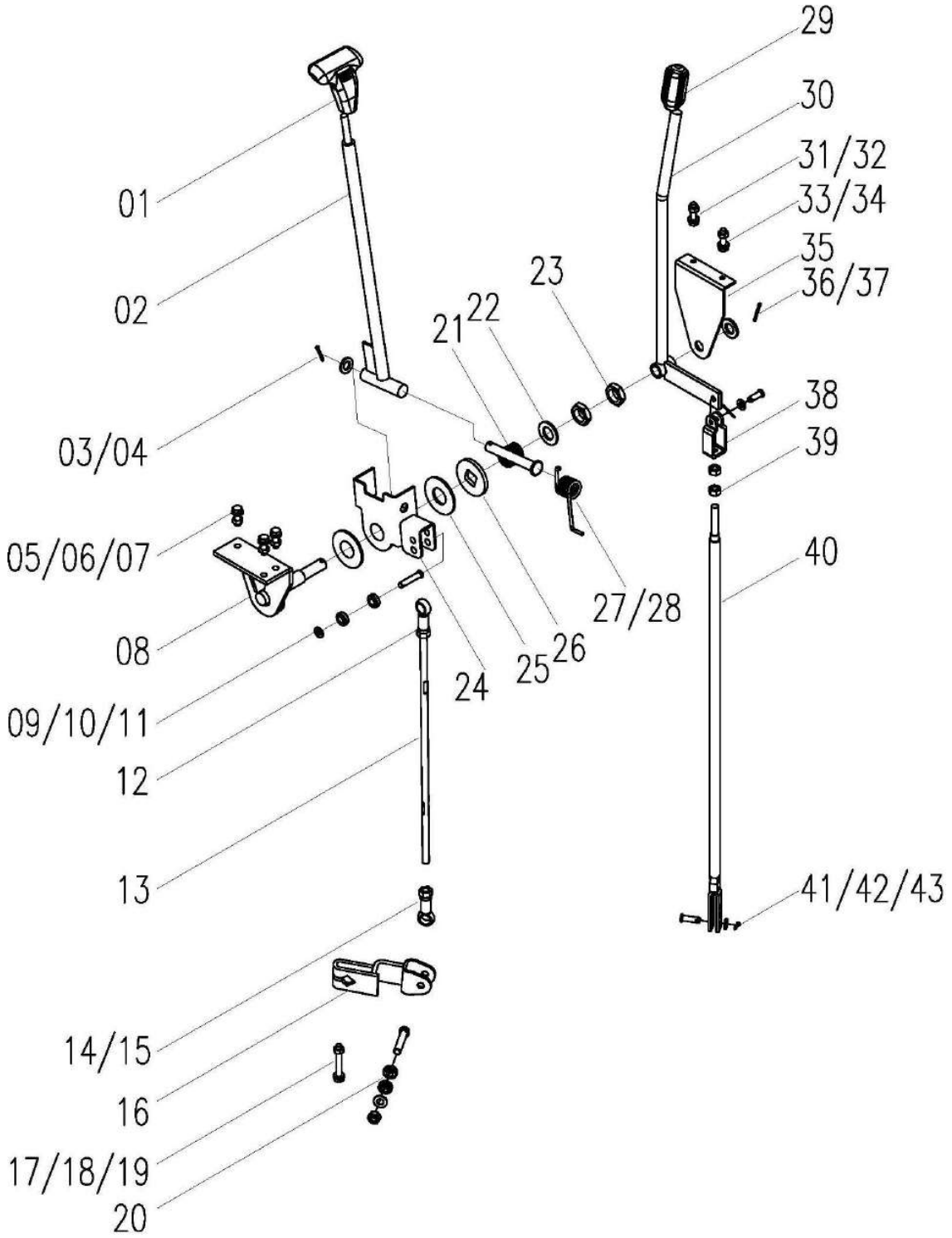

Main/Auxiliary Shift Handle W3.5H-07B-04-00				
No.	**Description**	**Qty**	**Part code**	**Remark**
01	Lever, Main Clutch	1	W2.5H-07-04-19	
02	Rod	1	W2.5H-07-04-15-00	
03	Washer, Plain 14	1	GB/T97.1	
04	Bolt M8*25	1	GB/T91	
05	Cushion 8	3	GB/T5783	
06	Washer, Plain 8	3	GB/T93	
07	Nut M8	3	GB/T97.1	
08	Frame	1	W2.5H-07J-04-03-00	
09	Washer, Plain 10	2	GB/T97.1	
10	Fixing Shaft, Lower	1	W2.5DA-07E-04-06	
11	Sleeve	4	W2.5DA-07E-04-10	
12	Bearing PHSA10	1	W2.5DA-07E-04-21L	
13	Connecting Rod HST	1	W3.5H-07F-04-04	
14	Nut M8	1	GB/T6170	
15	Bearing PHSA10	1	W2.5DA-07E-04-21R	
16	Shifting Rod	1	W2.2-07-04-08-00D	
17	Bolt M10*75	1	GB/T5782	
18	Cushion 10	3	GB/T93	
19	Washer	2	W2.5DA-07E-04-28	
20	Fixing Shaft, Lower	1	W2.5DA-07E-04-06	
21	Spring	1	W2.0-07-04A-25	
22	Washer 20	1	GB/T97.1	
23	Nut M20*1.5	2	GB/T6173	
24	Shifting Frame Weld	1	W2.5DA-07KC-04-14-00	
25	Washer, Plain	2	W2.0-07-04A-24	
26	Press Plate	1	W2.0-07-04A-23	
27	Pin Shaft B8*26	1	GB/T882	
28	Spring	1	W2.5DA-07KC-04-20	
29	Lever, Clutch	1	W2.5H-07-05-01	
30	Auxiliary Shift Rod	1	W2.5H-07J-04-02-00	
31	Bolt M6*18	2	GB/T5783	
32	Nut M6	2	GB/T6170	
33	Washer, Plain 6	2	GB/T97.1	
34	Cushion 6	2	GB/T93	
35	Support Seat	1	W2.5DA-07E-04-26	
36	Washer, Plain 16	1	GB/T97.1	
37	Pin 3.2*30	1	GB/T91	
38	Connecting Fork	1	W2.5H-07J-04-09-00	
39	Nut M10	5	GB/T6170	

Main/Auxiliary Shift Handle W3.5H-07B-04-00

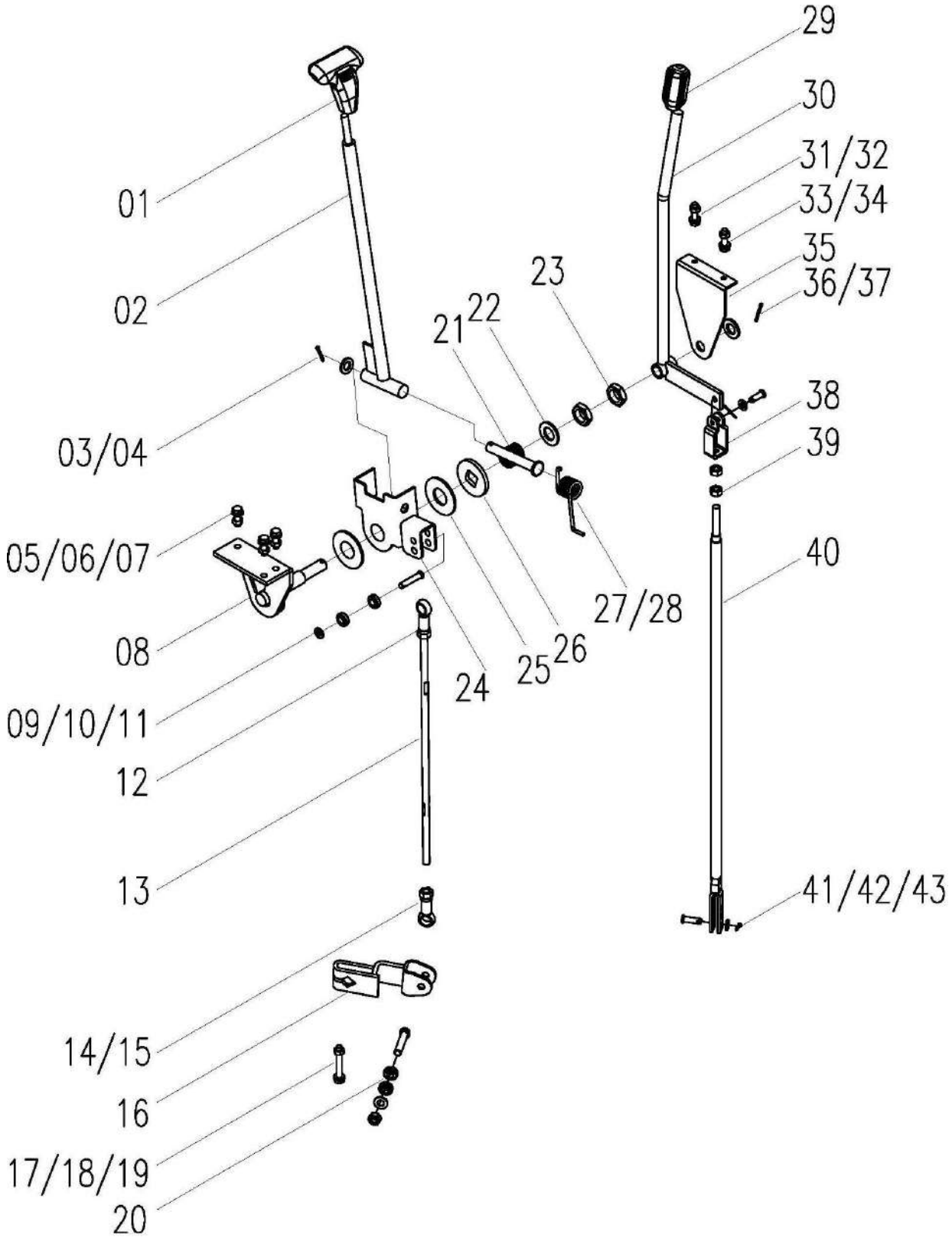

Main/Auxiliary Shift Handle W3.5H-07B-04-00

No.	Description	Qty	Part code	Remark
40	Shifting Rod	1	W3.5H-07B-04-07-00	
41	Pin Shaft B8×26	2	GB/T882	
42	Washer, Plain8	2	GB/T97.1	
43	Pin 2.5*26	2	GB/T91	

Clutch Rod W2.5H-07-05-00

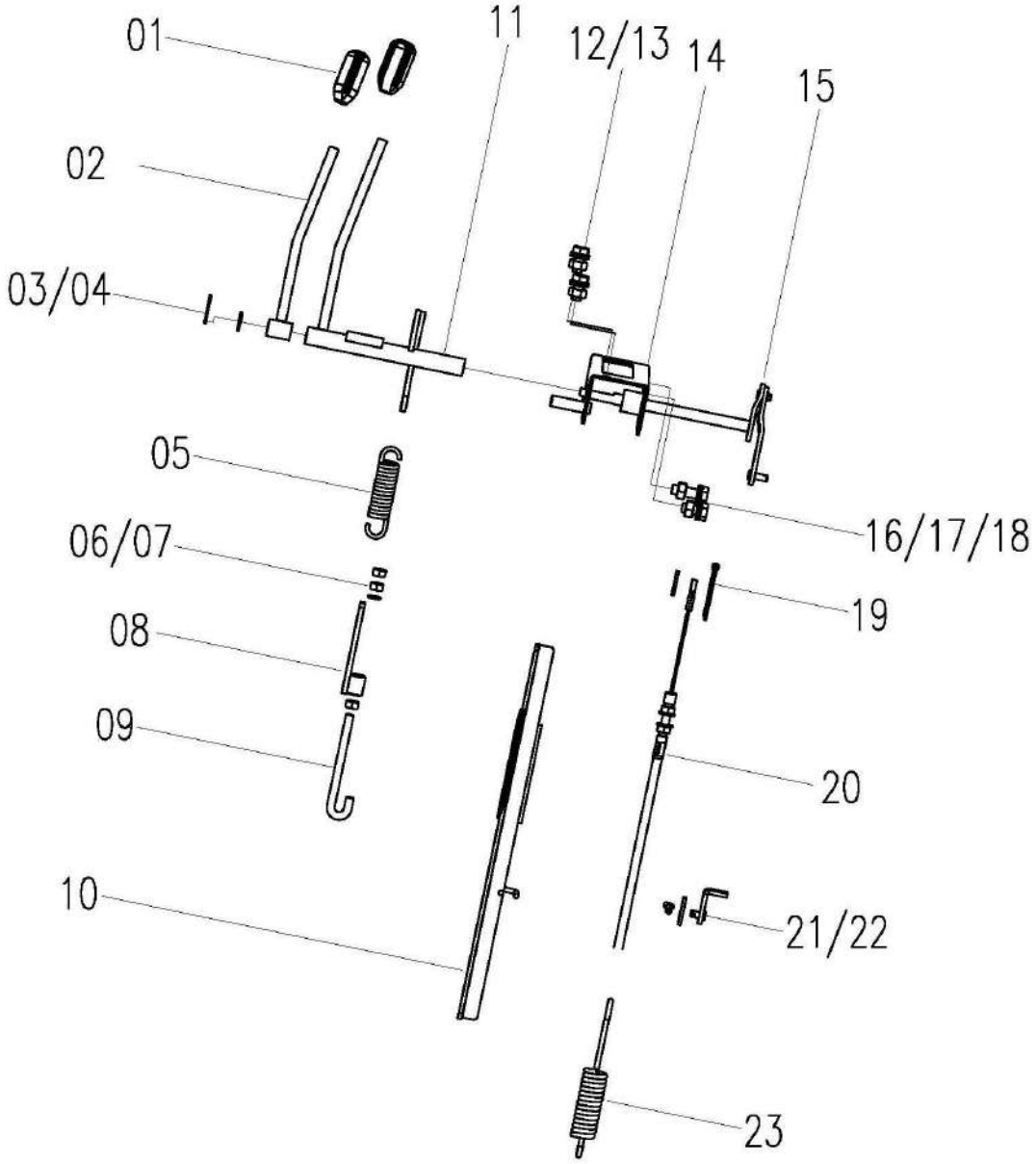

Clutch Rod W2.5H-07-05-00

No.	Description	Qty	Part code	Remark
01	Clutch Rod	2	W2.5H-07-05-01	
02	Operating Rod, Wire	1	W2.5G-07K-05-06-00	
03	Pin 2.5*25	1	GB/T91	
04	Washer, Plain 10	2	GB/T97.1	
05	Spring	1	W2.5D-07G-05-11A	
06	Nut M10	3	GB/T6170	
07	Cushion 10	2	GB/T93	
08	Plate Weld	1	W2.5DA-07E-05-07-00	
09	Hook	1	W2.5DA-07E-05-08	
10	Support Frame Weld	1	W2.5H-07-05-12A-00	
11	Operating Rod, Thresher	1	W2.5DA-07E-05-02-00	
12	Bolt M8*20	6	GB/T5783	
13	Cushion 8	6	GB/T93	
14	Support Frame Weld	1	W2.5DA-07E-05-14-00	
15	Shaft, Connecting Rod	1	W2.5DA-07E-05-03-00	
16	Bolt M10×25	1	GB/T5783	
17	Washer, Plain 8	7	GB/T97.1	
18	Nut M8	5	GB/T6170	
19	Pin 2.5*20	1	GB/T91	
20	Reverse Wire	1	W2.5-07-05-04-00	
21	Cable support is welded	1	W2.5DA-07E-05-05-00	
22	Pin 2.5×16	1	GB/T91	
23	Spring	1	WL7B-07-05-15	

Engine Protective Cover W3.5H-07X-06-00

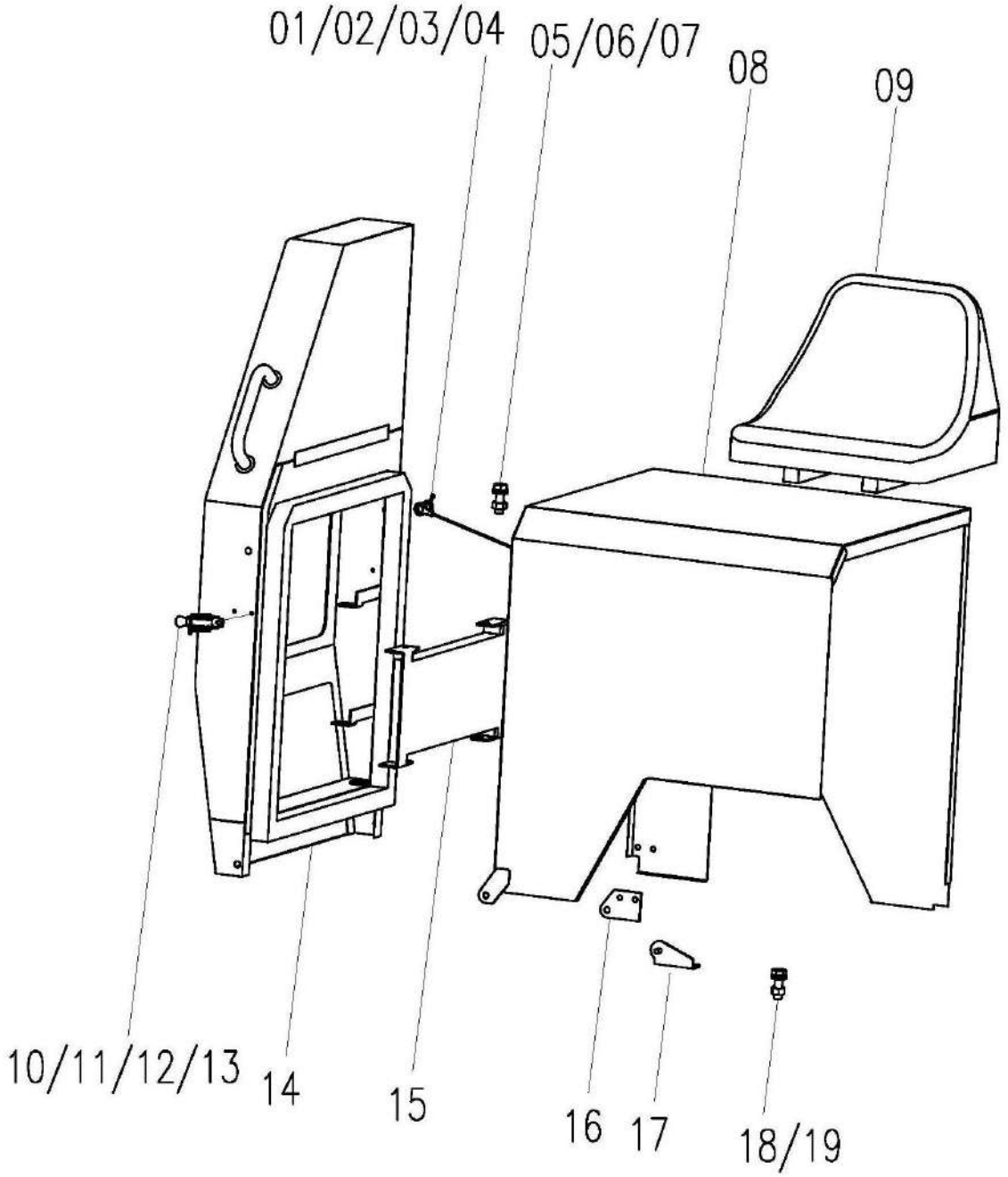

Engine Protective Cover W3.5H-07X-06-00

No.	Description	Qty	Part code	Remark
01	Wire Rope	1	W2.5-07-06-05	
02	Pin 4 × 22	2	GB91-88	
03	Washer 12	2	GB97.1-85	
04	Spring pin	1	W2.5H-07C-06-05	
05	Bolt M8×20	6	GB5783-86	
06	Nut M8	4	GB6170-86	
07	Washer 8	8	GB97.1-85	
08	Seat Frame Assy	1	W2.5D-07CE-06-04-00	
09	Seat Frame Assy	1	W2.0-07-06-01-00B	
10	clamp	3	W2.5-07-06-09-00A	
11	Nut M6	6	GB6170-86	
12	Washer 6	6	GB93-87	
13	Water Tank Protecting Cover Assy	1	W2.5DA-07GC-06-03-00	
14	Oil Cooler	1	W2.5DD-05DC-20-00	
15	Connecting Plate	1	W2.5-07-06-06	
16	Fixing Block (supported by dust cover)	1	W2.5-07-06-07-00	
17	Bolt M8×25	2	GB6170-86	
18	Washer 8	8	GB93-87	

Water Tank Protective Cover Assy W2.5DA-07GC-06-03-00

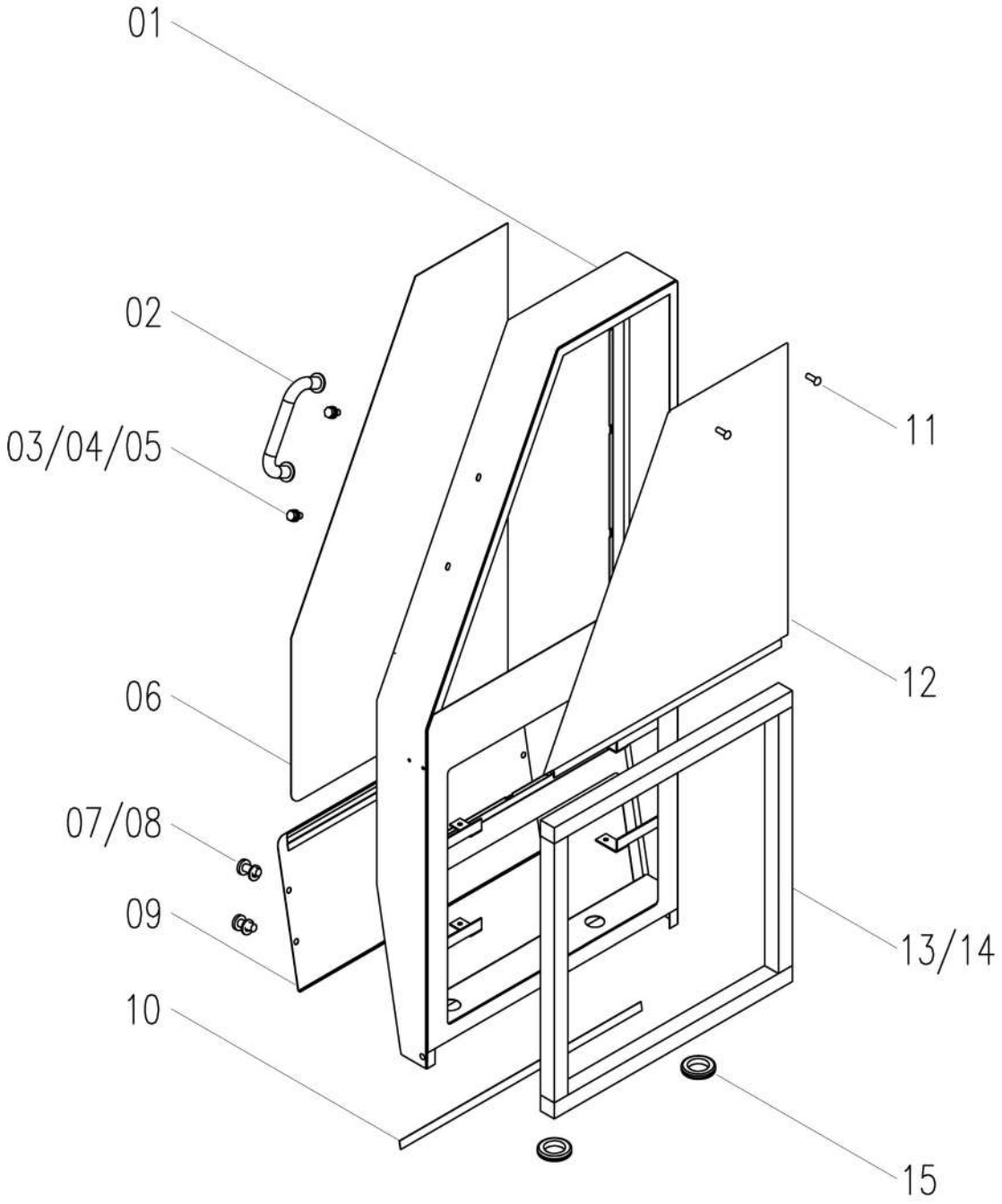

Water Tank Protective Cover Assy W2.5DA-07GC-06-03-00				
No.	**Description**	**Qty**	**Part code**	**Remark**
01	Dust Cover Weld	1	W2.5DA-07GC-06-03-02-00	
02	Handrails Weld	1	W2.5D-07-06-03-15-00	
03	Nut M8	2	GB6170	
04	Washer 8	6	GB93	
05	Washer 8	2	GB97.1	
06	Cover	1	W2.5DA-07-06-03-03	
07	Screw M8 × 16	4	GB/T818	
08	Washer 8	4	GB96	
09	Cover (front and bottom, dustproof)	1	W2.5-07-06-03-04-00	
10	Sealing Sponge		W2.5DA-07-06-03-04	
11	Rivet 4 × 12	13	GB4005	
12	Cover Weld, Rear, Upper	1	W2.5D-07(B)-06-03-01-00	
13	Sponge Gasket 1	2	W2.5DA-07G-06-03-07	
14	Sponge Gasket 2	2	W2.5DA-07GC-06-03-08	
15	Dust Ring	2	W2.5DA-07-06-03-05	

Throttle Acceleration W2.5DA-07E-08-00

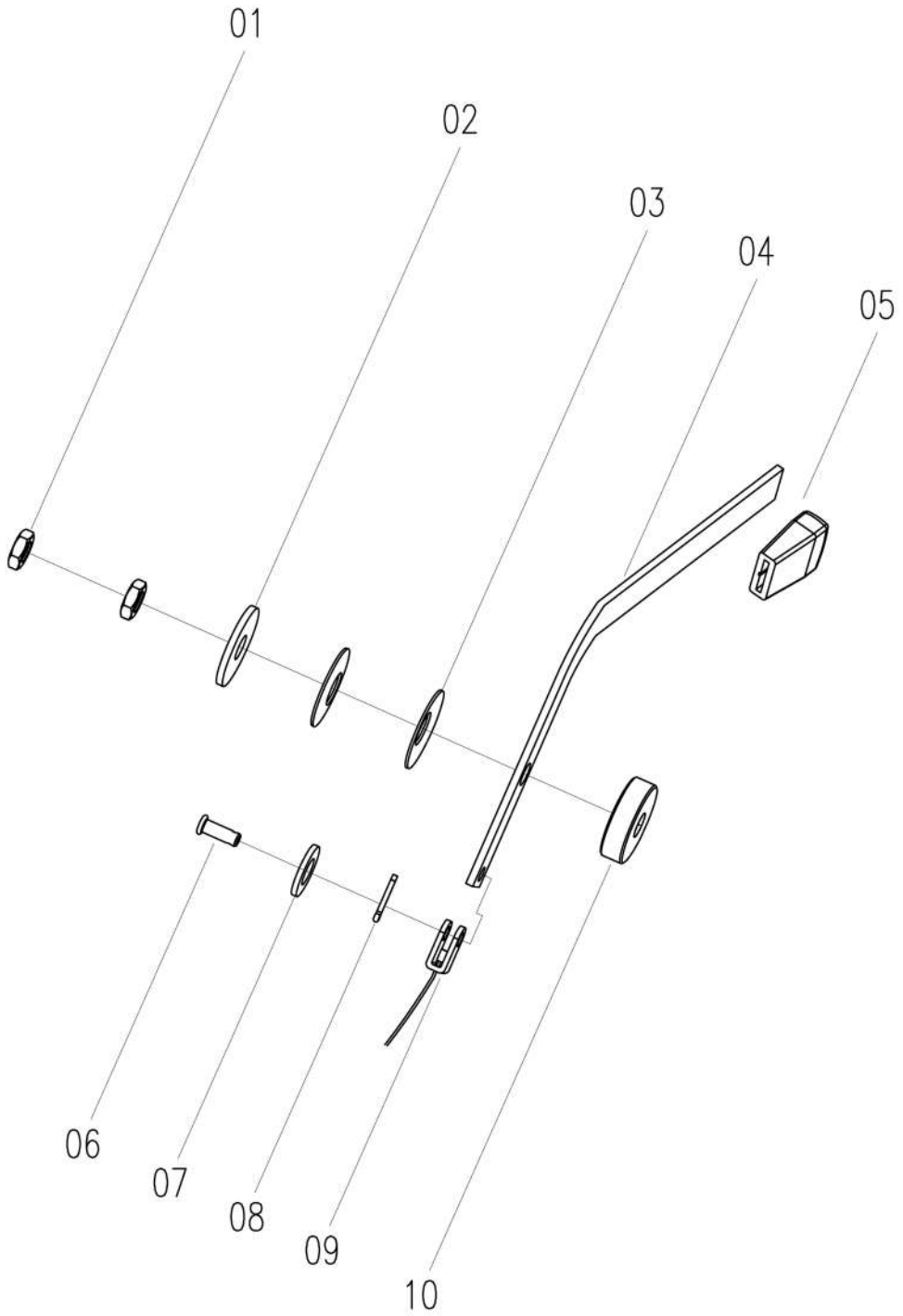

Throttle Acceleration W2.5DA-07E-08-00

No.	Description	Qty	Part Code	Remark
01	Thin Nut M14	2	GB/T6172	
02	Extra-large Washer 14	1	GB/T5287	
03	Dish Washer	2	W2.5-07-04-11	
04	Accelerator	1	W2.5DA-07E-08-02	
05	Handle	1	W2.5-07-04-12	
06	B Pin Shaft 8 × 20	1	GB/T882	
07	Washer Plain 8	1	GB/T97.1	
08	Pin 2.5 × 20	1	GB/T91	
09	Throttle Wire	1	W2.5-07-08-05-00	
10	Pad	1	W2.5DA-07E-08-06	

Canopy Assy (with fan) W2.5DF-13S-00

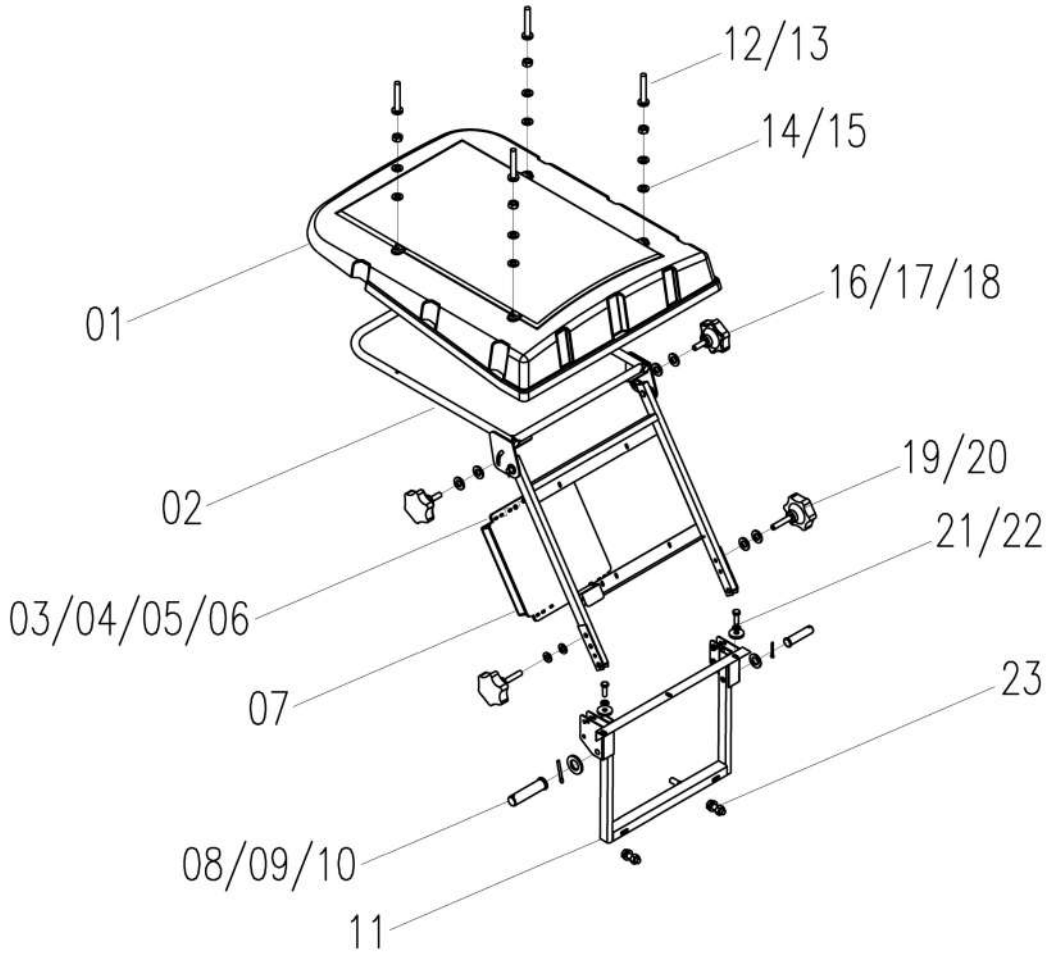

Canopy Assy (with fan) W2.5DF-13S-00

No.	Description	Qty	Part Code	Remark
01	Canopy	1	W2.0-13-03A	
02	Welding of upper support	1	W2.5DF-13-02-00	
03	Bolt M6X25	4	GB/T5783	
04	Washer 6	8	GB/T96	
05	Washer 6	4	GB/T93	
06	Nut M6	4	GB/T6170	
07	Fan	1	W2.5DF-13-05	
08	Pin B16X65	2	GB/T882-86	
09	Pin 4X30	2	GB/T91-86	
10	Washer 16	2	GB/T97.1-85	
11	Lower support welding	1	W2.5DF-13S-01-00	
12	Cross recessed pan head screws M8X50	4	GB/T818-2000	
13	Washer 8	7	GB/T93-87	
14	Washer 8	8	GB/T96-85	
15	Nut M8	4	GB/T6170-86	
16	Bolt B	2	W3.5H-13B-04	
17	Washer 10	6	GB/T93-87	
18	Washer 10	4	GB/T96-85	
19	Bolt A	2	W3.5H-13B-03	
20	Washer 10	2	GB/T97.1-85	
21	Bolt M10X25	2	GB/T5783-86	
22	shaft end gear ring	3	W2.0-02-11-08	
23	Bolt M8X25	3	GB/T5783-86	

Operation Assy W3.5H-07F-00

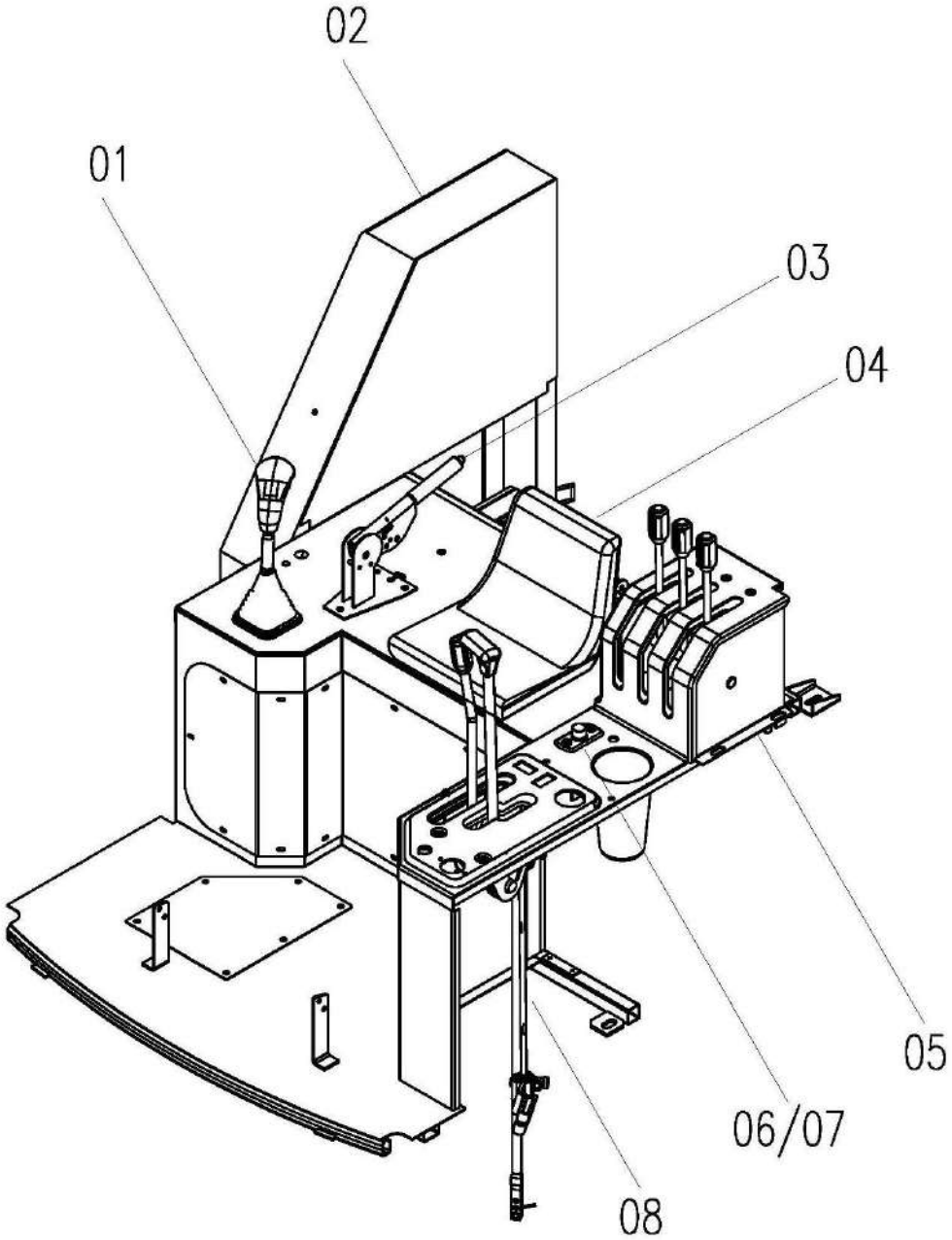

Operation Assy W3.5H-07F-00

No.	Description	Qty	Part Code	Remark
01	Main and Auxiliary Lever	1	W2.5E-07F-02-00	
02	Dust Cover Assy	1	W3.5H-07F-06-00	Changchai 102HP , State 2 optional
03	Brake	1	W2.5E-07F-03-00A	
04	Seat	1	W2.0-07-06-01-00C	
05	Clutch Lever	1	W2.5E-07F-05-00A	
06	Pedal Lever	1	W2.5E-07F-08-00A	Changchai 102HP , State 2 optional
07	Flameout Wire	1	W2.5E-07F-09-00A	Changchai 102HP , State 2 optional
08	Main and Auxiliary Shift	1	W3.5H-07F-04-00	

Main/Auxiliary Lever W2.5E-07F-02-00

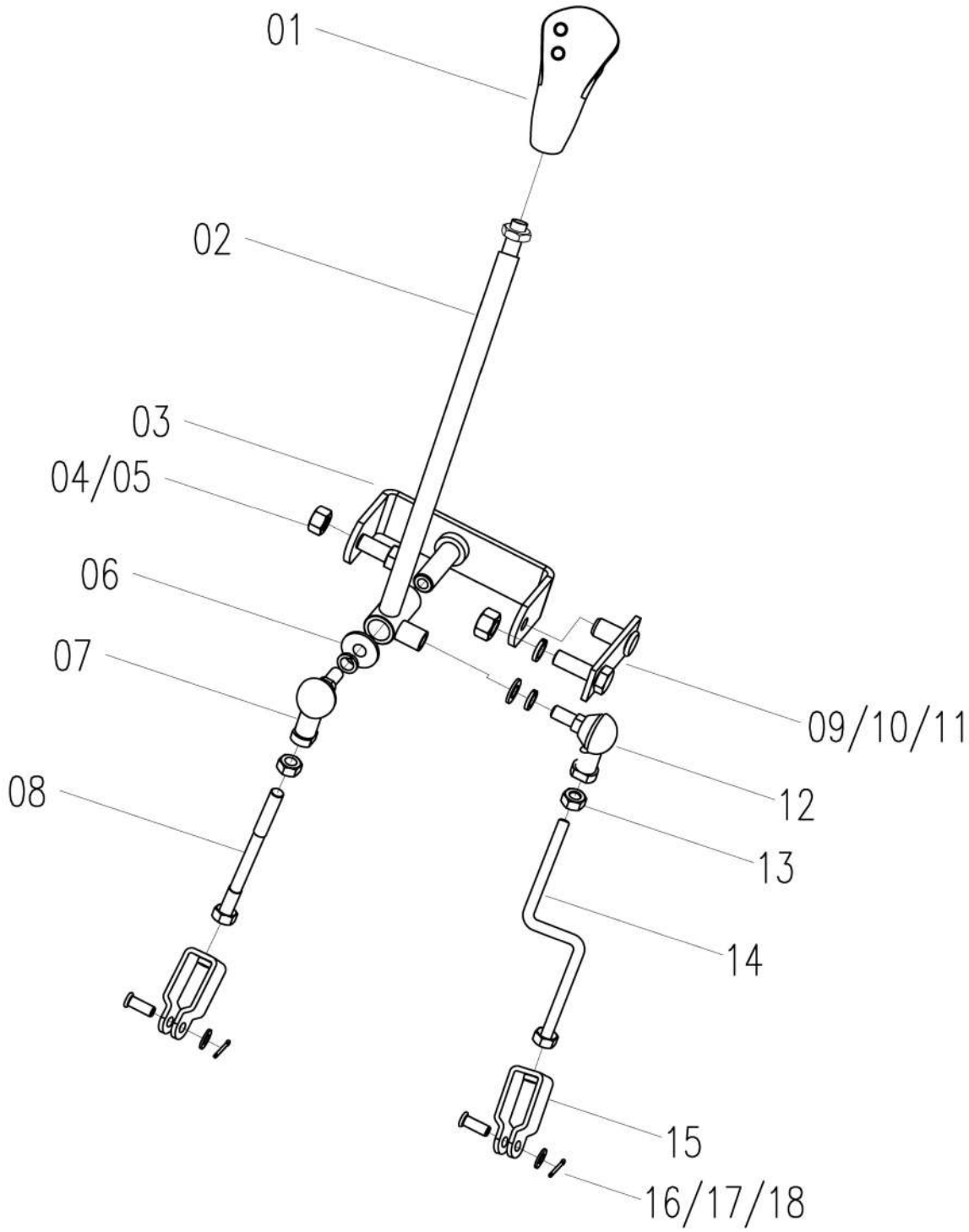

Main/Auxiliary Lever W2.5E-07F-02-00

No.	Description	Qty	Part Code	Remark
01	Handle, Main Operation	1	W2.5DA-07-02-28	
02	Lever, Main Operation	1	W2.5E-07F-02-06-00	
03	Steering Seat Weld	1	W2.5E-07F-02-02-00	
04	Bolt	1	W2.5D-07-02-18	
05	Nut M12	1	GB6170	
06	Washer, Big 10	1	GB/T96	
07	Bearing SQ10C-RS	2	JB5306	Left, Hand
08	Rod, Header Lifting	1	W2.5E-07F-02-05	
09	Pin Shaft Weld	1	WD.5FK.2.5	
10	Nut M8	1	GB/T6170-86	
11	Washer 8	1	GB93	
12	Washer 10	2	GB/T93	
13	Nut M10	4	GB6170	Left Hand, Right Hand 2 pcs each
14	Steering Rod	1	W2.5E-07F-02-04	
15	Connecting Fork	2	W2.5DA-07-02-21	
16	Washer 10	3	GB/T97.1	
17	Pin Shaft B10*20	2	GB882	
18	Pin 2.5*25	2	GB91	

Brake W2.5E-07F-03-00A

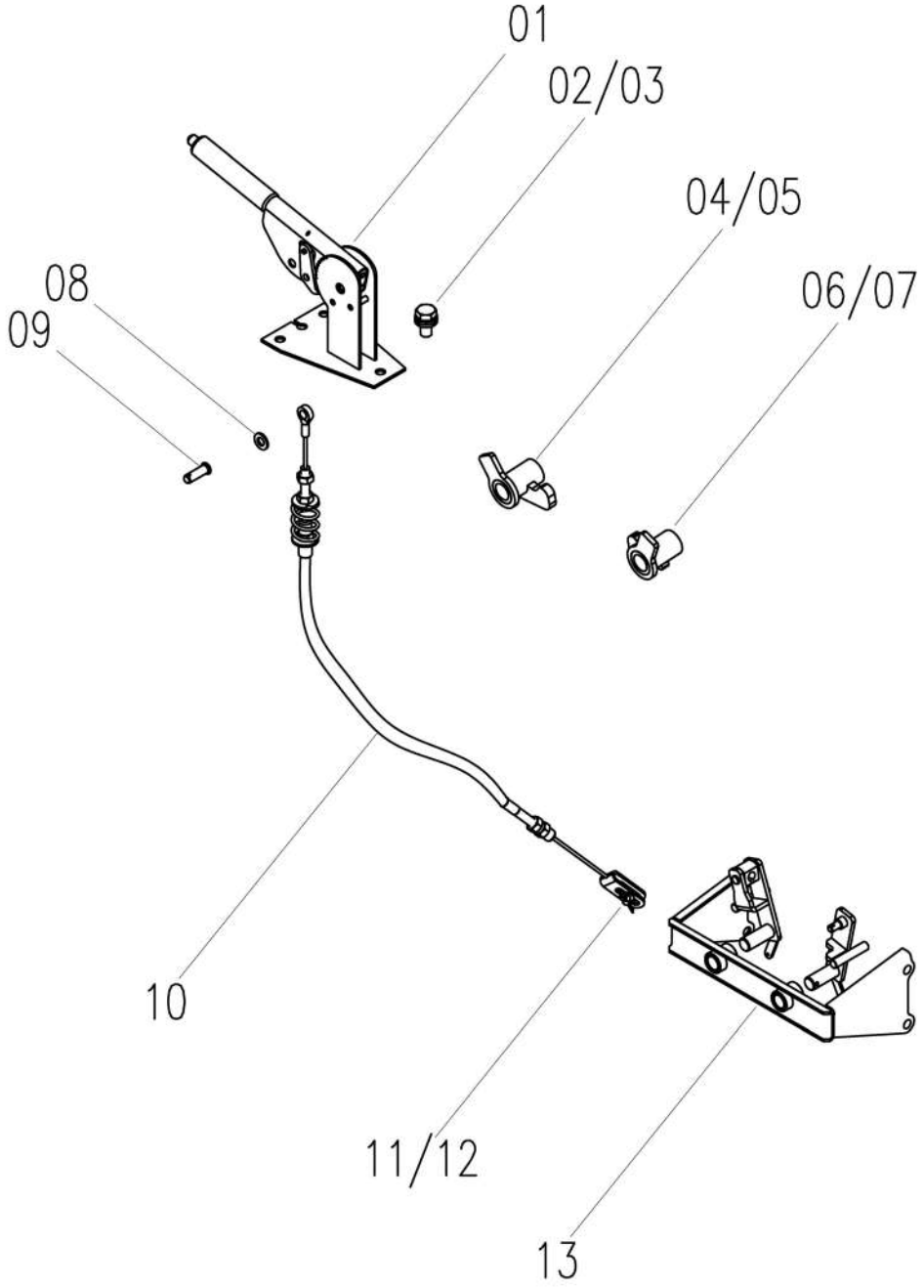

Brake W2.5E-07F-03-00A

No.	Description	Qty	Part Code	Remark
01	Hand Brake Assy	1	W2.5-07K-03-11-00A	
02	Bolt M10*25	3	GB/T5783	
03	Washer10	3	GB/T93	
04	Swing Arm, left	1	ZKB40-206a-401-1-00S	
05	Pin 5x30	1	GB/T879	
06	Swing Arm, right	1	ZKB40-206a-401-2-00S	
07	Pin 8*30	1	GB/T879	
08	Pin B10*30	1	GB/T882	
09	Washer10	1	GB/T97.1	
10	Breaking Wire	1	W2.5-07K-03-04-00A	
11	Washer, Plain 8	1	GB/T97.1	
12	Pin 2.5*25	2	GB/T91	
13	Fixed Seat	1	W2.5-07D-03-12-00	

Main and Auxiliary Shift W3.5H-07F-04-00

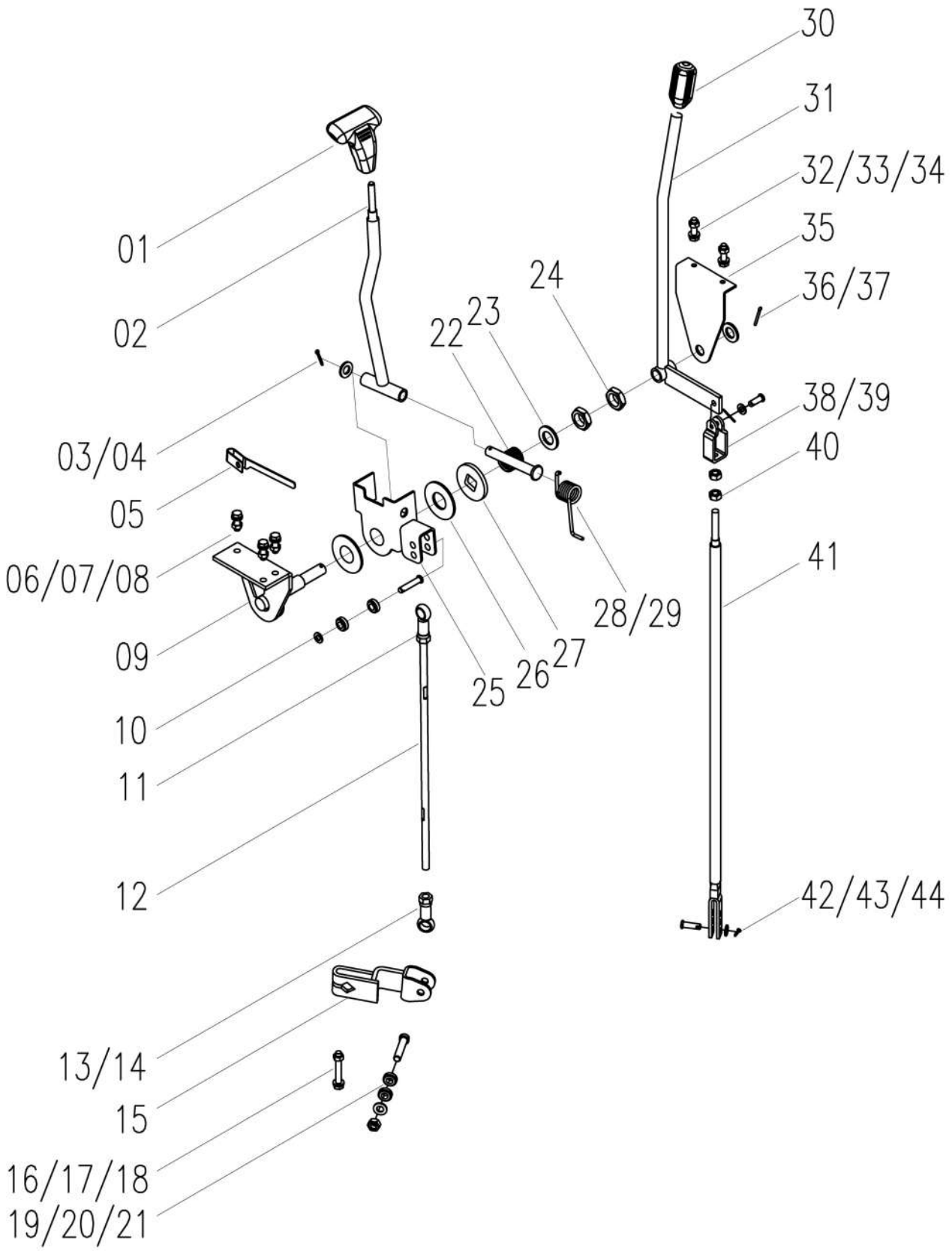

Main and Auxiliary Shift W3.5H-07F-04-00				
No.	**Description**	**Qty**	**Part Code**	**Remark**
01	Lever,Main Clutch	1	W2.5H-07-04-19	
02	Rod	1	W2.5E-07F-04-15A-00	
03	Washer, Plain 14	1	GB/T97.1	
04	Pin 3.2*30	1	GB/T91	
05	Plate	1	W2.5E-07F-04-27	
06	Bolt M8*25	3	GB/T5783	
07	Cushion 8	3	GB/T93	
08	Washer, Plain 8	3	GB/T97.1	
09	Support Seat	1	W2.5DA-07E-04-03-00	
10	Pin B8x24	1	GB/T882	
11	Bearing PHSA10	1	W2.5DA-07E-04-21R	
12	Connecting Rod HST	1	W3.5H-07F-04-04	
13	Nut M10	1	GB/T6170	
14	BearingPHSA10	1	W2.5DA-07E-04-21L	
15	Shifting Rod	1	WD.5ME.4.8D	
16	Bolt M10*75	1	GB/T5782	10.9 Level
17	Cushion10	2	GB/T93	
18	Washer	2	W2.5DA-07E-04-28	
19	Fixing Shaft, Lower	2	W2.5DA-07E-04-06	
20	Sleeve	4	W2.5DA-07E-04-10	
21	Washer, Plain 10	1	GB/T97.1	
22	spring	1	W2.0-07-04A-25	
23	Washer20	1	GB/T97.1	
24	NutM20*1.5	2	GB/T6173	
25	Shifting Frame	1	W2.5E-07F-04-14-00	
26	Washer, Plain	2	W2.0-07-04A-24	
27	Press Plate	1	W2.0-07-04A-23	
28	Pin B14*100	1	GB/T882	
29	Spring	1	W2.5E-07F-04-20	
30	Lever, Clutch	1	W2.5H-07-05-01	
31	Auxiliary Shift Rod	1	W2.5E-07F-04-02A-00	
32	Bolt M6x16	2	GB/T5783	
33	Washer6	2	GB/T97.1	
34	Washer6	2	GB/T93	
35	Support Seat	1	W2.5E-07F-04-26-00	
36	Washer16	2	GB/T97.1	
37	Pin 3.2x30	1	GB/T91	
38	Connecting Fork	2	W2.5D-07-04-09-00	
39	Spring Pin	1	W2.5E-07F-04-04-03	

Main and Auxiliary Shift W3.5H-07F-04-00

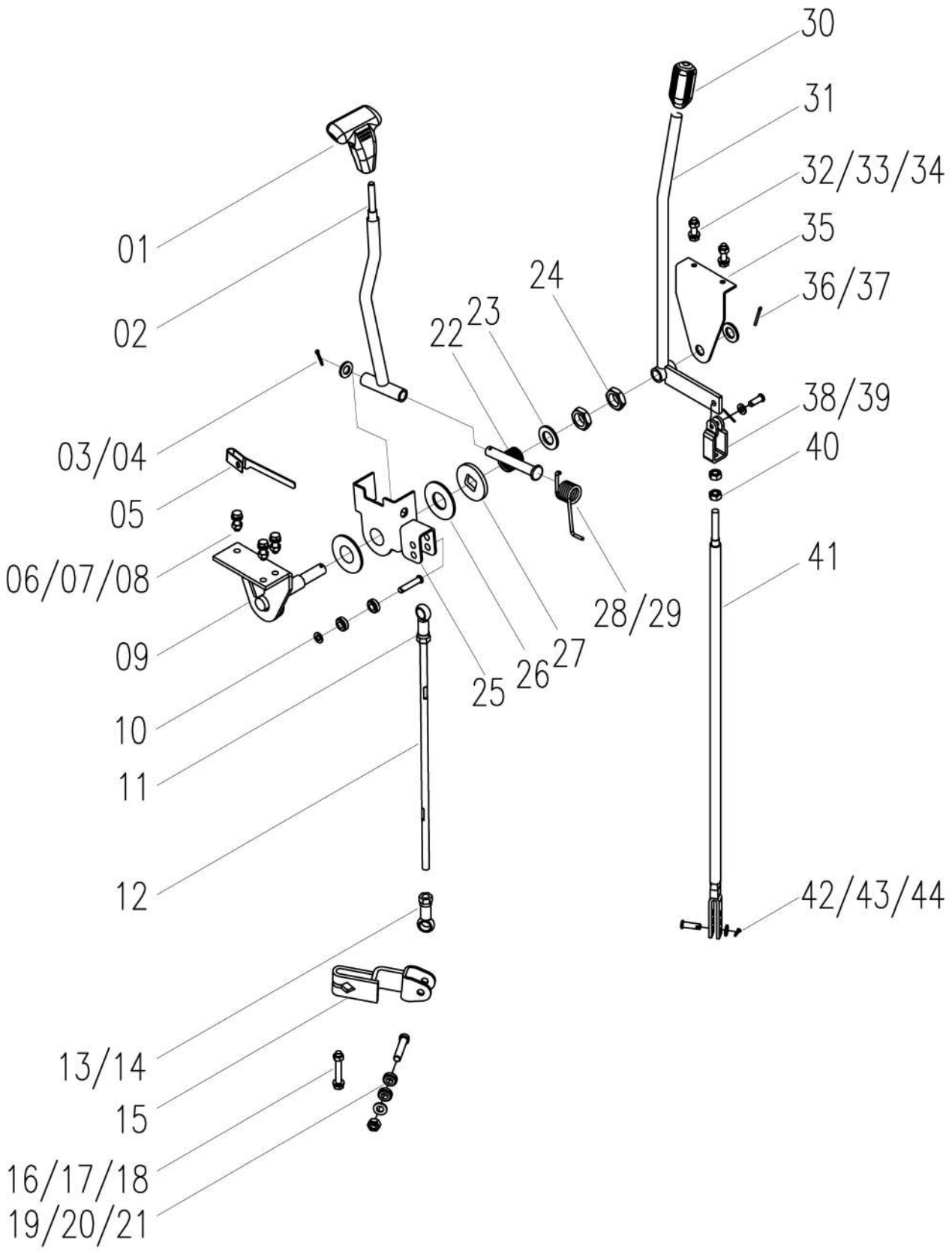

Main and Auxiliary Shift W3.5H-07F-04-00

No.	Description	Qty	Part Code	Remark
40	Nut M10	5	GB/T6170	
41	Shifting Rod	1	W3.5H-07F-04-07-00	
42	Pin Shaft B8*26	2	GB/T882	
43	Washer, Plain 8	3	GB/T97.1	
44	Pin 2.5*25	2	GB/T91	

Clutch Assy W2.5E-07F-05-00A

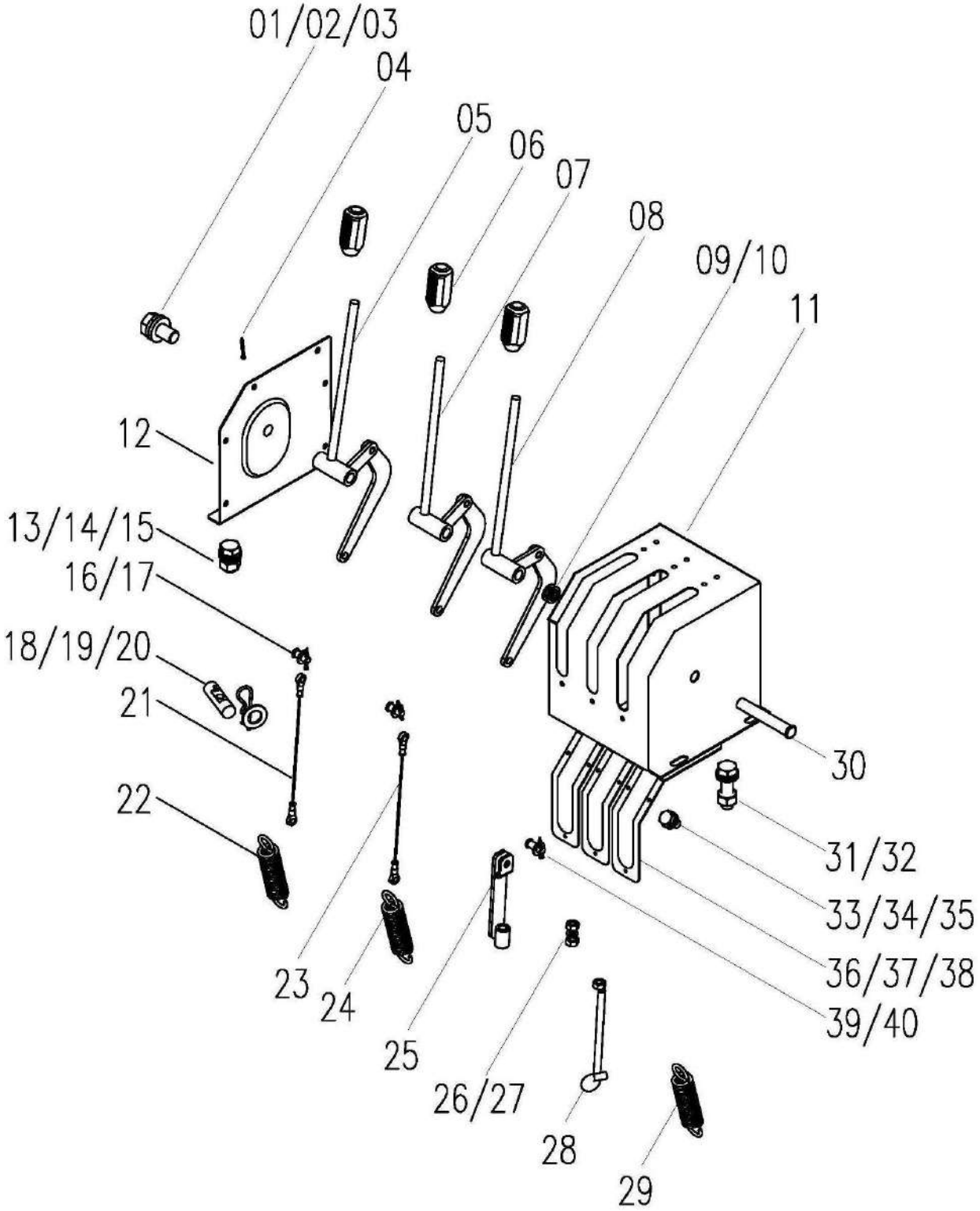

Clutch Assy W2.5E-07F-05-00A				
No.	**Description**	**Qty**	**Part Code**	**Remark**
01	Bolt M6*16	6	GB/T5783	
02	Cushion 6	6	GB/T93	
03	Washer，Plate 6	6	GB/T97.1	
04	Pin 4*40	5	GB/T91	
05	Operating Rod, Thresher	1	W2.5E-07-05A-05-00	
06	Clutch Rod	3	W2.5H-07-05-01	
07	Clutch Weld, Header	1	W2.5E-07-05A-04-00	
08	Main Clutch Handle	1	W2.5E-07F-05-03-00A	
09	Adjustment Gasket 1	1	W2.5E-07F-05-15	
10	adjustment Gasket 2	1	W2.5E-07F-05-16	
11	Cover Weld, Upper	1	W2.5E-07F-05-01-00A	
12	Plate, Right Side	1	W2.5E-07F-05-02A	
13	Bolt M8*20	2	GB/T5783	
14	cushion 8	4	GB/T93	
15	Washer，Plate 8	2	GB/T97.1	
16	Washer，Plate 10	3	GB/T97.1	
17	Pin Shaft B10*20	2	GB/T882	
18	Rotating Shaft	2	W5.0-07F-05-09	
19	Spring Pin	2	W2.5DA-03H-27-10	
20	Washer，Plate	2	W2.5E-07F-05-32	
21	Clutch Wire, Unloading	1	W2.5E-07-05A-08-00	
22	Spring	1	W2.5-07-05-10	
23	Clutch Wire, Header	1	W2.5E-07-05A-07-00	
24	Spring	1	WL7B-07-05-15	
25	Plate Weld	1	W2.5E-07F-05-06-00	
26	Cushion 10	1	GB/T93	
27	Nut M10	3	GB/T6170	
28	Connecting Rod	1	W2.5E-07F-05-11	
29	Spring	1	W2.5D-07G-05-11A	
30	Pin Shaft B16*210	1	GB/T882	
31	Bolt M8*45	2	GB/T5782	
32	Nut M8	2	GB/T6170	
33	Bolt M4*12	12	GB/T5783	
34	Cushion 4	12	GB/T93	
35	Washer, Big 4	12	GB/T96	
36	Nut M4	12	GB/T6170	
37	Sleeve	3	W2.5E-07F-05-38A	
38	Plate	3	W2.5E-07F-05-39A	
39	Pin Shaft B10*26	1	GB/T882	
40	Pin 3.2*28	3	GB/T91	

Protective Cover W3.5H-07F-06-00

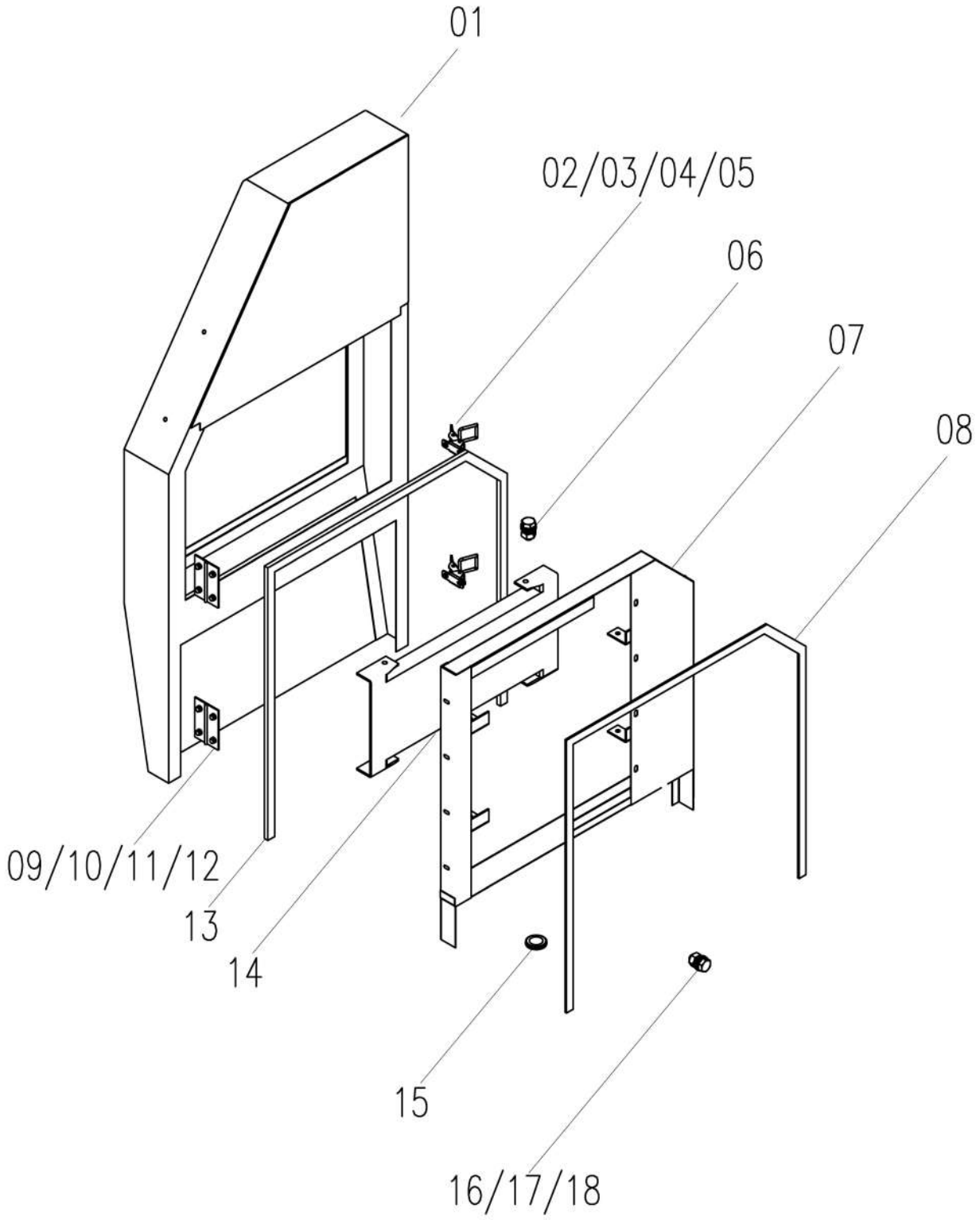

Protective Cover W3.5H-07F-06-00

No.	Description	Qty	Part Code	Remark
01	Water Tank Protecting Cover Assy	1	W2.5E-07-06-03-00A	
02	Nut M6	8	GB/6170	
03	Washer 6	4	GB/93	
04	Washer 6	4	GB/97.1	
05	Securing Clip	2	W2.5-07-06-09-00A	
06	Nut M8	4	GB6170	
07	Dust Cover Weld	1	W2.5E-07-06-04-00	
08	Sealing Sponge	On Demand	W2.0-02-47	
09	Bolt M6*16	8	GB/5783	
10	Washer 6	8	GB/96	
11	Washer 6	8	GB/93	
12	Hinge	2	4LZ.2A.29.2.3	
13	Sealing Sponge	On Demand	W2.5E-07-06-06	
14	Oil Cooler	1	W2.5DD-05DC-20-00	
15	Dust Ring	2	W2.5DA-07-06-03-05	
16	Bolt M8*16	12	GB/T5783	
17	Washer 8	12	GB/T97.1	
18	Washer 8	12	GB/T93	

Throttle Acceleration W2.5E-07F-08-00A

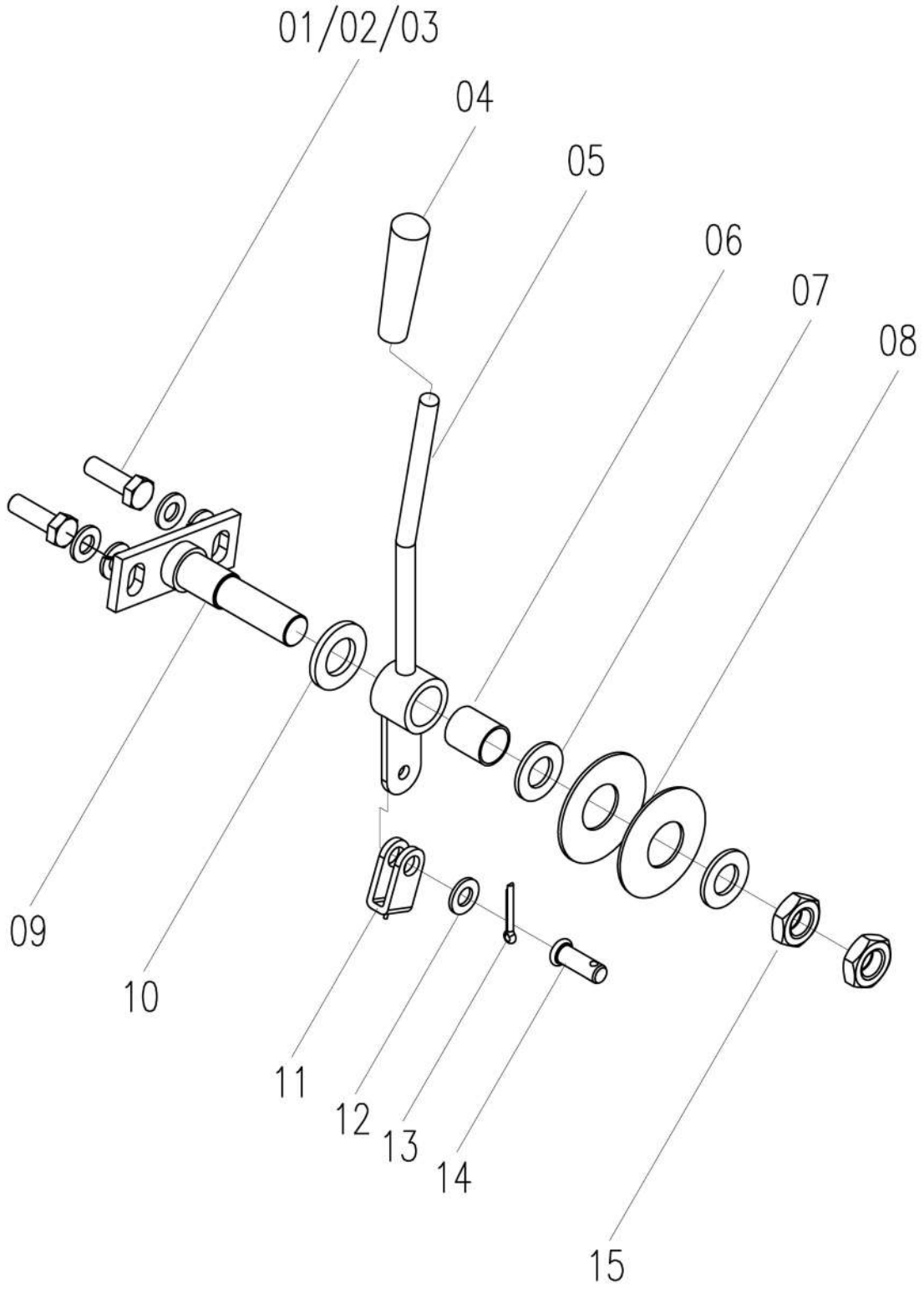

Throttle Acceleration W2.5E-07F-08-00A

No.	Description	Qty	Part Code	Remark
01	Bolt M8*25	2	GB/5783	
02	Washer 8	2	GB/93	
03	Washer 8	2	GB/97.1	
04	Handle	1	W2.0-07-08-05	
05	Accelerated	1	W2.5E-07F-08-01-00A	
06	Sleeve 181620	1	FB-90	
07	Washer 14	2	GB/97.1	
08	Washer	2	W2.0-07-04-05	
09	Seat	1	W2.0-07-08-02-00	
10	Washer，Plate	1	W2.0-07-04-13	
11	Throttle Wire	1	W2.5E-07F-08-03-00A	
12	Washer 6	1	GB//97.1	
13	Pin 1.6*16	1	GB/91	
14	Pin Shaft B6*16	1	GB/882	
15	Nut M14	2	GB/6170	

Cabin Assy W3.5H-20-00

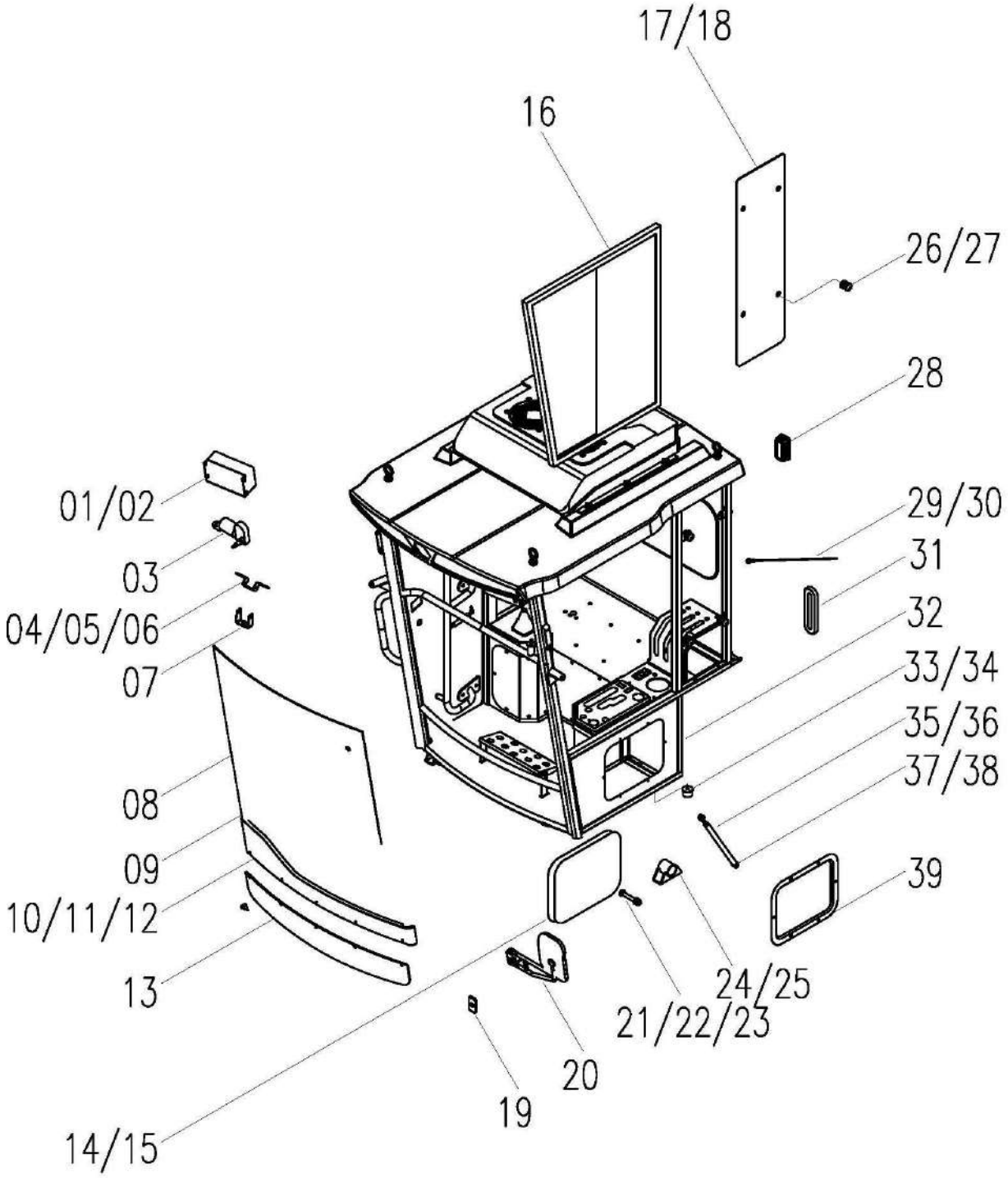

Cabin Assy W3.5H-20-00

No.	Description	Qty	Part Code	Remark
01	Motor Cover	1	WD.20MF-80	
02	Bolt C7	10		
03	Wiper	1	WD.20MF.56	
04	Instrument Seat Weld	1	W2.5M-20-58-00	
05	Nut M6	2	GB/T62	
06	Washer 6	46	GB/T93	
07	Instrument Stand	1	W2.5M-20-01-25	
08	Glass, Front	1	W2.5M-20-17	
09	Plate, Front	1	W2.5M-20-54-00	
10	Washer	4	WD.20ME-59	
11	Nut M6	9	GB/T6170	
12	Washer, Rubber	12	W2.5M-20-57	
13	Baffle	1	W2.5M-20-29	
14	Cushion, Left	1	W2.5M-20-79-00	
15	Cushion, Middle	1	W2.5M-20-83	
16	Glass Assy,Left	1	W2.5M-20-85-00	
17	Glass,Left,Rear	1	W2.5M-20-32	
18	Washer, Rubber	8	W2.5-20K-27	
19	Hinge	1	W2.5M-20-49	
20	Mirror, Left	1	DS-JM358-C-01	
21	Bolt 12*35	4	GB/T5783	
22	Washer 12	4	GB/T93	
23	Nut M12	4	GB/T6170	
24	Washer 12	12	GB/T97.1	
25	Washer		W2.5M-20-36-00	
26	Washer, Rubber	8	W2.5-20K-28	
27	Nut Window	8	W2.5-20K-29	
28	Plug	2	W2.5-20D-82	
29	Wire Rope	1	W2.5M-20-48	
30	Washer 8	2	GB/T97.1	
31	Washer, Rubber	1	W2.5MT-20-90	
32	Cabin Weld	1	W3.5H-20-01-00	
33	Washer	2	W2.5M-20-80	
34	Washer	2	W2.5M-20-92	
35	Air Brake	1	W2.5M-20-50	
36	Pin Shaft 12*100	1	GB/T880	
37	Spring Pin	3	W2.5E-07F-04-04-03	
38	Washer 12	2	GB/T96	
39	Plate, Middle	1	W2.5M-20-07	

Cabin Assy W3.5H-20-00

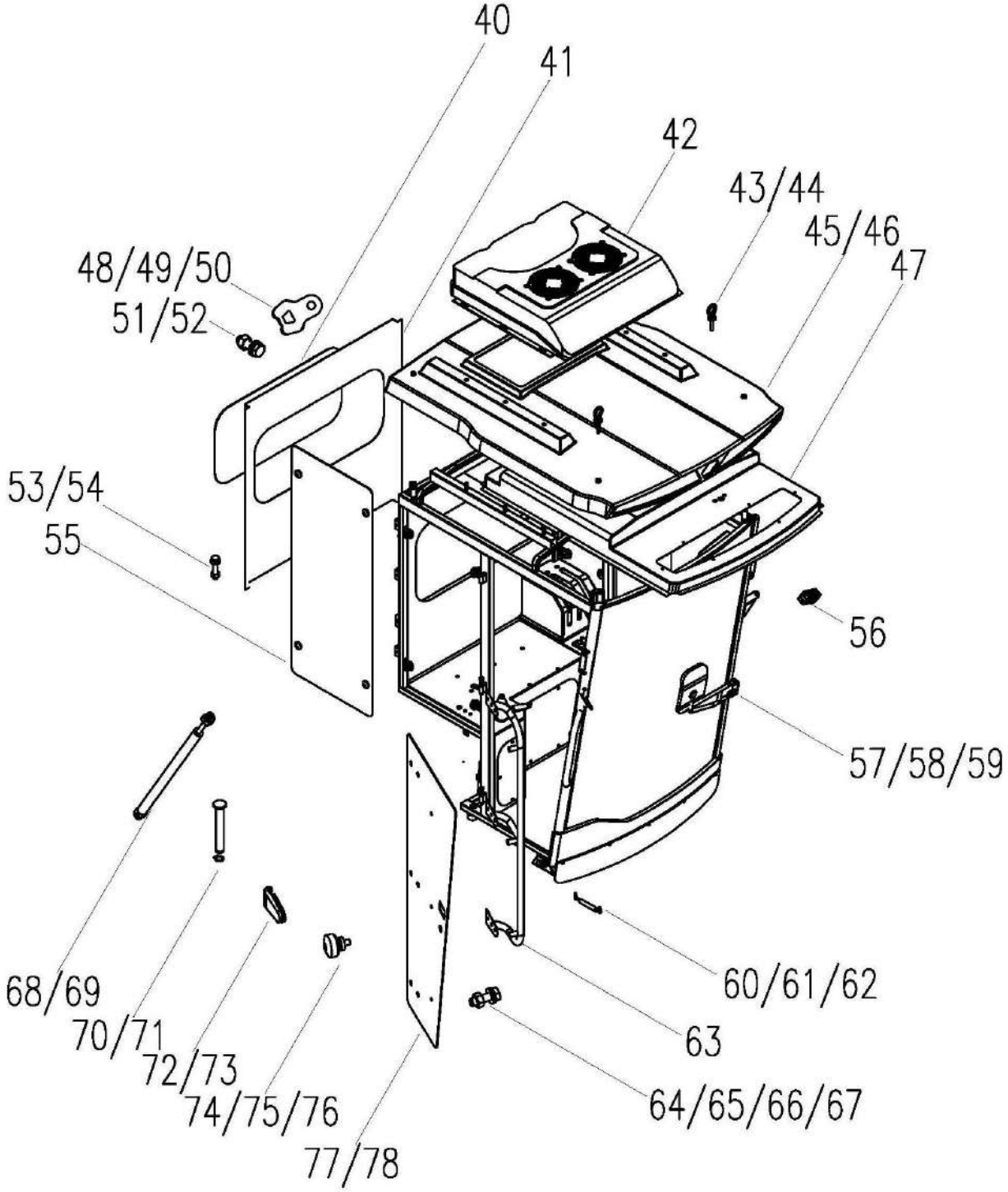

Cabin Assy W3.5H-20-00				
No.	**Description**	**Qty**	**Part Code**	**Remark**
40	Glass, Rear	1	W2.5M-20-15	
41	Plate, Rear	1	W2.5M-20-55-00	
42	Air Condition	1	W3.5H-20-70-00	
43	Connection Hook	4	W2.5M-20-67-00	
44	Washer, Rubber	4	W2.5-20B-90	
45	Sealing Sponge	1	W2.5-20K-82-00	
46	Integrated Top	1	W2.5-20K-73-00	
47	Interior Roof	1	W2.5M-20-52	
48	Press Plate, Rear Glass	8	W3.5M-20-16	
49	Bolt M8*25	4	GB/T70.2-2000	
50	Washer，Plate M8	4	GB/T95-1985	
51	Nut M8	4	GB/T6170	
52	Rubber Cap	4	W3.5M-20-17	
53	Bolt M10*30	2	GB/T5783	
54	Nut M10	3	GB/T6170	
55	Glass, Right Rear	1	W2.5M-20-22	
56	Label	1	W2.5M-20-89-00	
57	Mirror, Right	1	DS-JM358-C-02	
58	Bolt M8*25	4	GB/T5783	
59	Washer 8	4	GB/T96	
60	Washer 8	10	GB/T93	
61	Nut M8	2	GB/T923	
62	Supporting Rod	1	W2.5M-20-30	
63	Armrest Weld	1	WD.20MK-19-00	
64	Bolt M10*25	6	GB/T5783	
65	Washer 10	9	GB/T93	
66	Washer 10	11	GB/T96	
67	Cover, Rubber	9	W2.5-20D-84	
68	Wire Rope	1	W2.5M-20-79	
69	Pin Shaft B12*40	3	GB/T882	
70	Pin Shaft	3	W2.5-20D-85	
71	Washer 12	3	GB/T894.1	
72	Hinge	3	W2.5-20K-04	
73	Gasket	6	W2.5-20K-26	
74	Washer, Rubber	3	W2.5-20K-23	
75	Washer, Rubber	3	W2.5-20K-24	
76	Bolt	11	W2.5-20K-25	
77	Lock	1		
78	Glass, Right Door	1	W2.5M-20-46	

Cabin Assy W3.5H-20-00

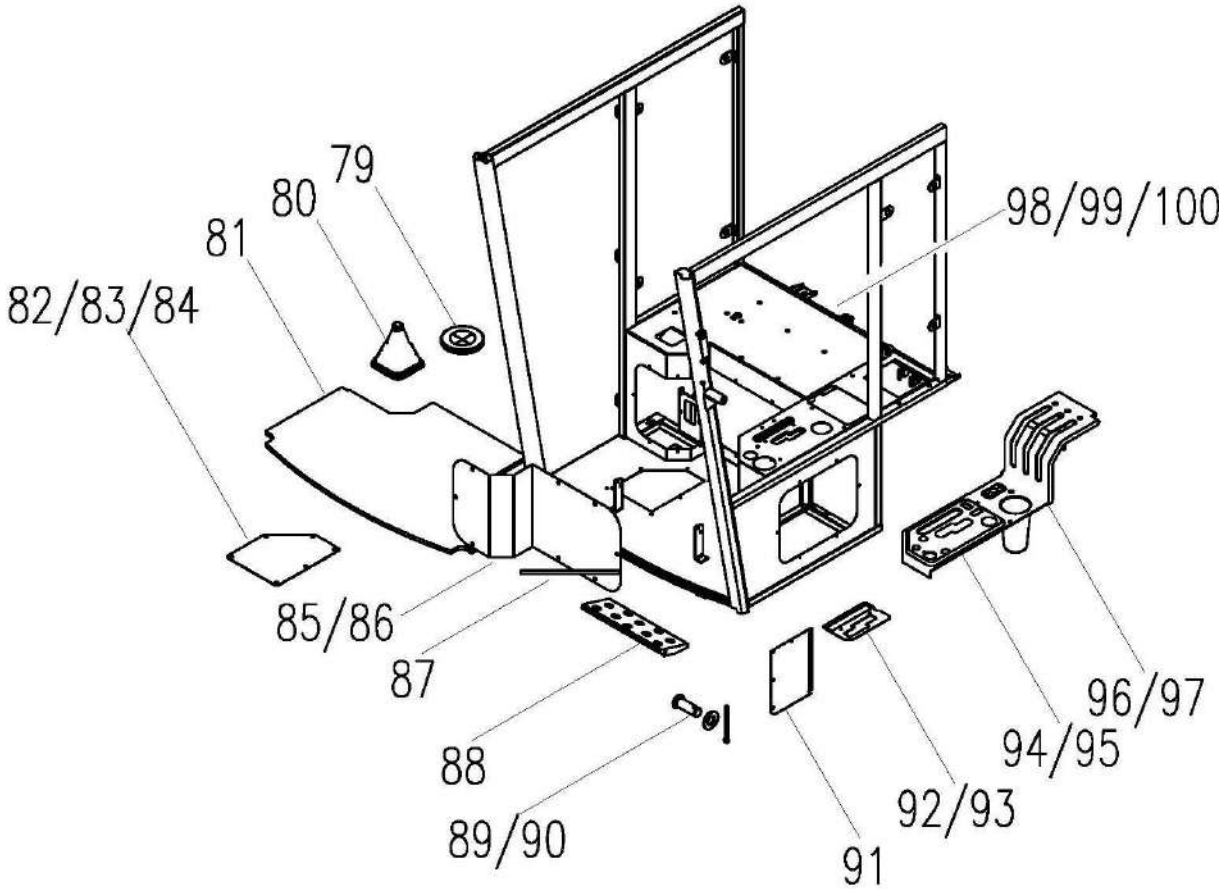

Cabin Assy W3.5H-20-00				
No.	**Description**	**Qty**	**Part Code**	**Remark**
79	Dust Proof Ring	1	W2.5DA-07-06-03-05B	
80	Sleeve	1	W2.0-07-02-06	
81	Floor Mat	1	W2.5M-20-42B	
82	Cover, Add Oil	1	W2.5M-20-26B	
83	Bolt M6*18	11	GB/T5783	
84	Cover	1	W2.5MT-20-20	
85	Cover Sponge	1	W3.5H-20-80-00	
86	Buckle	1	W2.5M-20-51	
87	Pedal	1	W2.5M-20-47	
88	Pin Shaft B8*20	2	GB/T882	
89	Pin 3.2*20	5	GB/T91	
90	Sealing Plate, Left	1	W2.5M-20-45	
91	Hairbrush, Main/Auxiliary Shift	1	W2.5M-20-74	
92	Washer 6	43	GB/T96	
93	Operation Board	1	W2.5M-20X-62A	
94	Seat, Stopping String	1	W2.5MT-20-89-00	
95	Bolt M6*18	30	GB/T818	
96	Washer 6	3	GB/T97.1	
97	Sponge	1	W2.5M-20X-81	
98	Sponge, Seat	1	W2.5M-20X-78-00	
99	Sponge	1	W2.5M-20-86-00	
100	Sponge	1	W3.5H-20-77-00	

Ⅶ.Engine

Engine Assy W2.5DA-09KQ-00				
No.	**Description**	**Qty**	**Part Code**	**Remark**
1	Engine Assy	1	W2.5DA-09KQ-01-00	Changchai88HP, State 2 optional
2	Radiator Assy	1	W2.5DA-09KQ-02-00	Changchai88HP, State 2 optional
3	Fuel Tank Assy	1	W2.5DA-09CK-03-00	200L increase Fuel Tank,19 New Design
4	Fuel Tank Assy	1	W2.5DA-09KQ-03-00	160L Fuel Tank,19 New Design
5	Engine Assy	1	W2.5DA-09KQ-01QC-00	Quanchai88HP, State 2 optional
6	Radiator	1	W2.5DA-09KQ-02QC-00	Quanchai88HP, State 2 optional
7	Engine Assy	1	W2.5DA-09KQ-01XC-00	Xinchai88HP, State 2 optional
8	Radiator	1	W2.5DA-09KQ-02XC-00	Xinchai88HP, State 2 optional

Engine Assy W2.5DA-09KQ-01-00

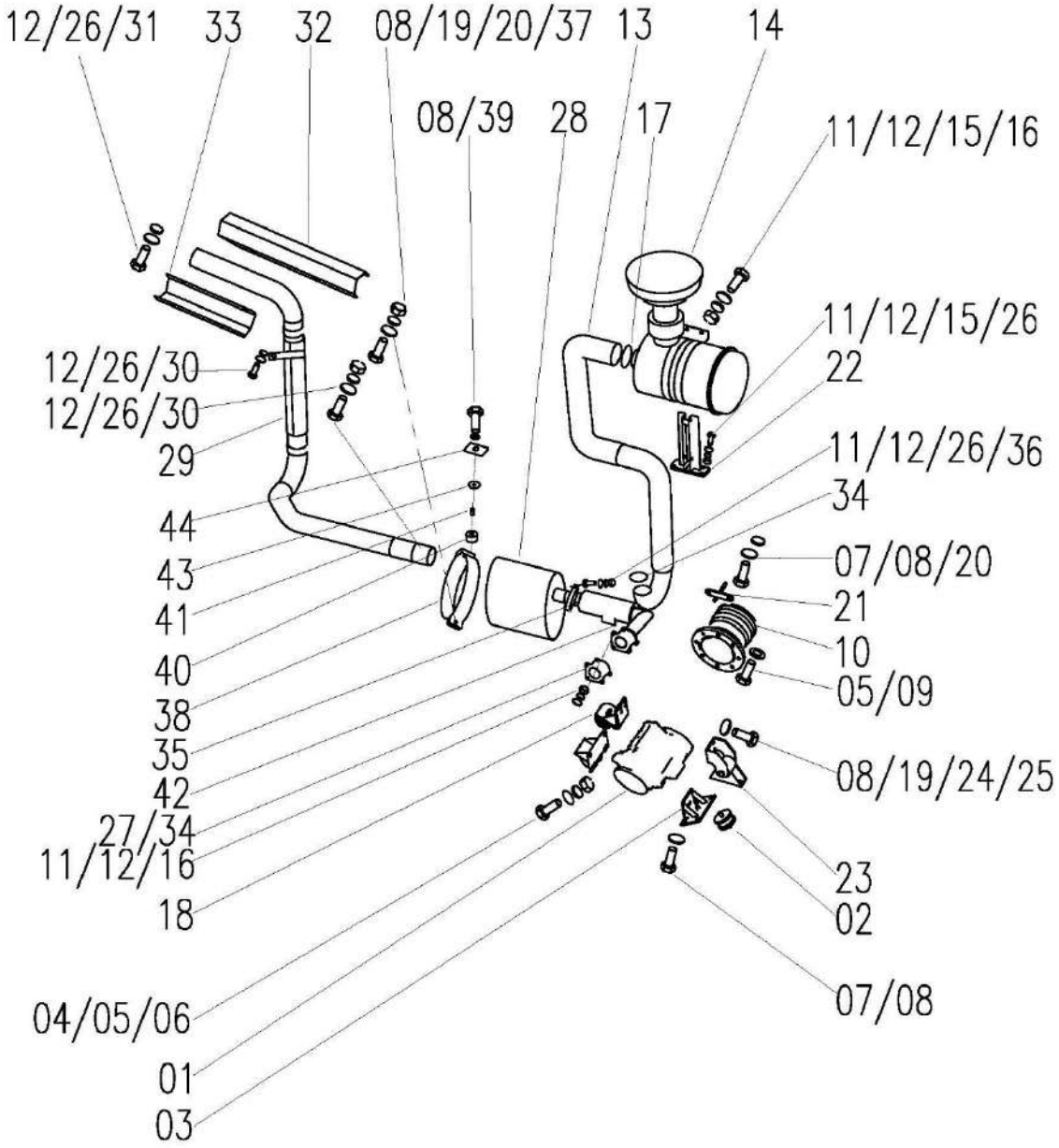

Engine Assy W2.5DA-09KQ-01-00				
No.	**Description**	**Qty**	**Part Code**	**Remark**
1	Changchai 88HP	1	供货号：4L8819011	Involute spline optional
2	Shock-absorbing Cushion, Engine	3	W2.0-03-05-09-00	
3	Supporter, Engine, Front, External	2	W2.5-03-05-03-00	
4	Nut M12×1.5	6	GB/T6176-86	
5	Cushion 12	12	GB/T93-87	
6	Washer, Big 12	5	GB/T96-85	
7	Bolt M10×25	18	GB/T5783-86	10.9 level
8	Cushion 10	22	GB/T93-87	
9	Bolt M12×40	6	GB/T5783-86	
10	Belt Pulley, Engine	1	W2.5C-03D-05G-02	
11	Nut M8	13	GB/T6170-86	
12	Cushion 8	24	GB/T93-87	
13	Air Intake Hose Assy	1	W2.5DA-03H-05A-08-00	
14	Self-dusting Air Filter	1	K35C9-A	
15	Bolt M8×20	8	GB/T5783-86	
16	Washer, Plain 8	12	GB/T97.1-85	
17	Throat Hoop, Steel, 70-90	1	Q67676	
18	Inner-rear Supporter, Engine	1	W2.5-03-05-04-00	
19	Nut M10	3	GB/T6170-86	
20	Cushion 10	3	GB/T97.1-85	
21	Rod Weld, Limiter, Belt	1	W2.5DA-03H-05D-05-00	
22	Fixing Frame, Air Filter	1	W2.5D-03-05-09-00	
23	Inner-front Supporter, Engine	1	W2.5DA-03FK-05-07A-00	
24	Bolt M10×30	2	GB/T5783-86	
25	Big Washer 10	3	GB/T96-85	
26	Big Washer, Plain 8	13	GB/T96-85	
27	Gasket, Exhaust Pipe	1	W2.5DA-03EK-05-15	two gaskets the engine with also need to be installed
28	Silencer	1	W2.5DA-03FK-05-02B-00SP	
29	Exhaust Pipe 2	1	W2.5DA-03FK-05-03B-00SP	
30	Bolt M8X18	4	GB/T5783-86	
31	Bolt M8X14	4	GB/T5783-86	
32	Upper Cover	1	W2.5DA-03EK-05-03SP	
33	Down Cover	1	W2.5DA-03EK-05-04SP	
34	Throat Hoop, Steel, 60-80	1	Q67676	
35	Hose Clamp	1	W2.2-09A-01-18	
36	Bolt M8X40	1	GB5783-86	
37	Bolt M10X40	1	GB/T5783-86	
38	Hose Clamp	1	W2.5DA-03FK-05-05-00	

Engine Assy W2.5DA-09KQ-01-00

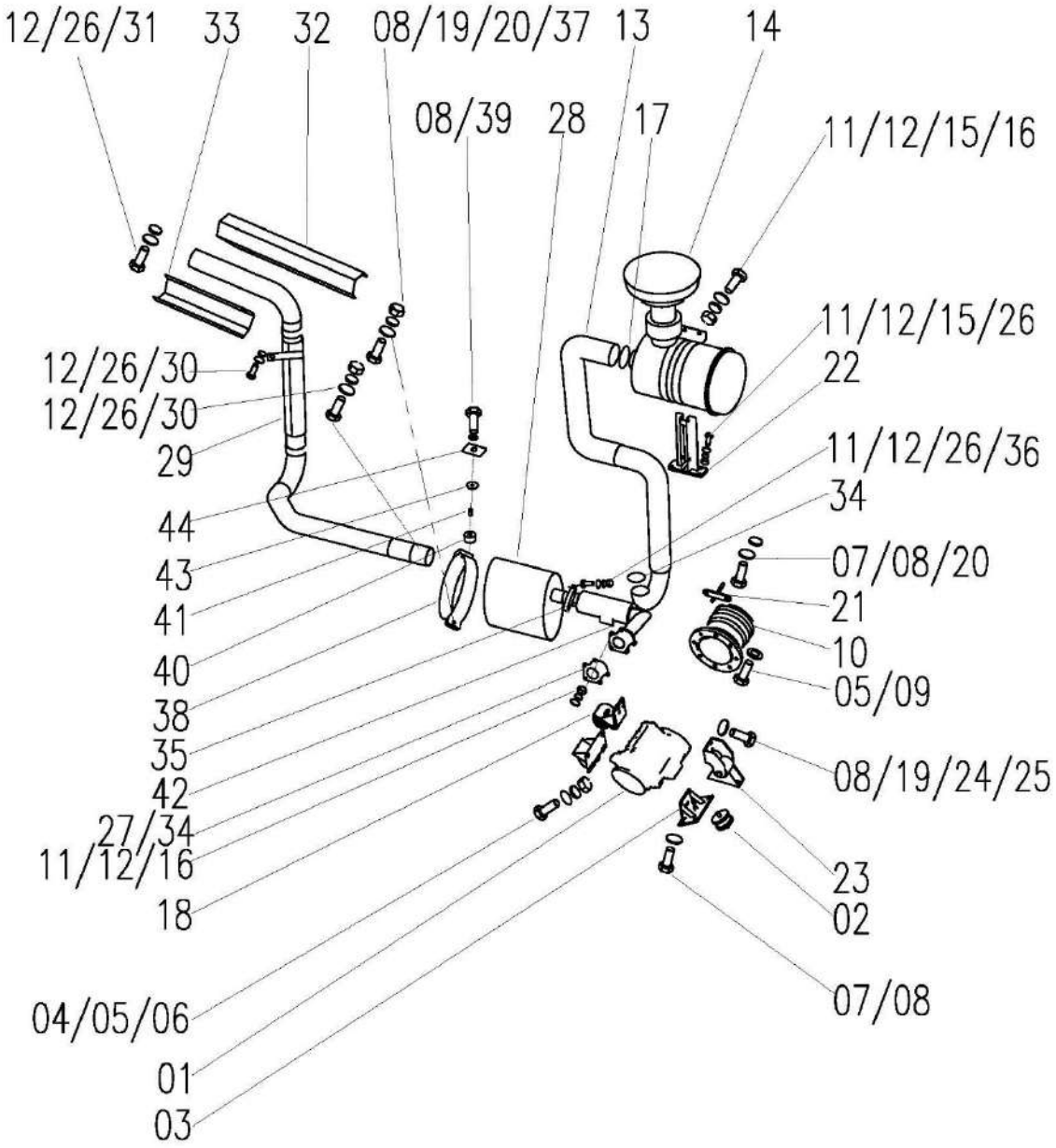

Engine Assy W2.5DA-09KQ-01-00				
No.	**Description**	**Qty**	**Part Code**	**Remark**
39	Bolt M10X55	1	GB5782-86	
40	Cushion	1	WD.20-03	
41	Shock-absorbing Sleeve	1	W2.5DA-03H-05-13	
42	Exhaust Pipe	1	W2.5DA-03FJ-05-06-00	
43	Gasket	1	W2.5DA-03FK-05-02B-12SP	Between the cushion and the angle steel
44	Gasket, Square	1	W2.5DA-03FK-05-02B-13SP	Pad between the angle steel and the bolt

Intake Hose Assy W2.5DA-03H-05A-08-00

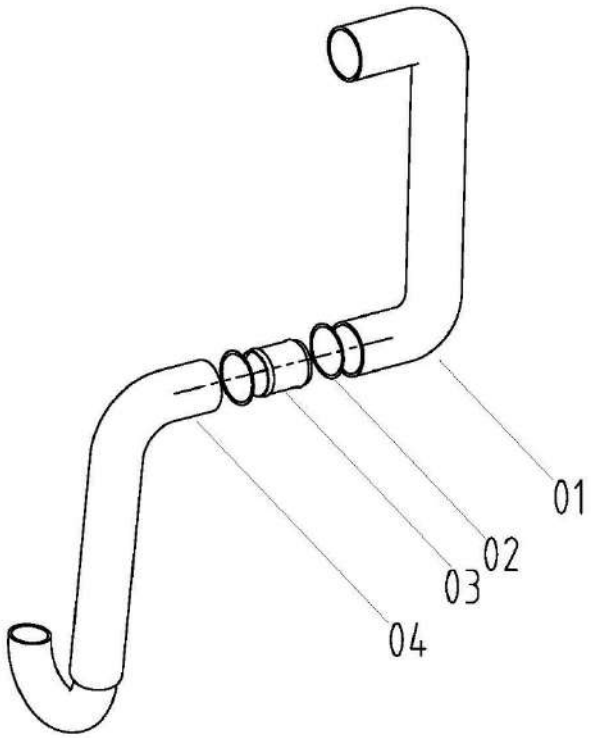

Intake Hose Assy W2.5DA-03H-05A-08-00

No.	Description	Qty	Part Code	Remark
1	Intake Hose A	1	W2.5DA-03H-05A-08-01	Outsourcing
2	Hose Clamp 70-90, Steel	2		Outsourcing
3	Intake Connecting Pipe	1	W2.0M-33-05-08-02	
4	Intake Hose B	1	W2.5DA-03H-05-08-03	Outsourcing

Inner-front Support, Engine W2.5DA-03FK-05-07A-00

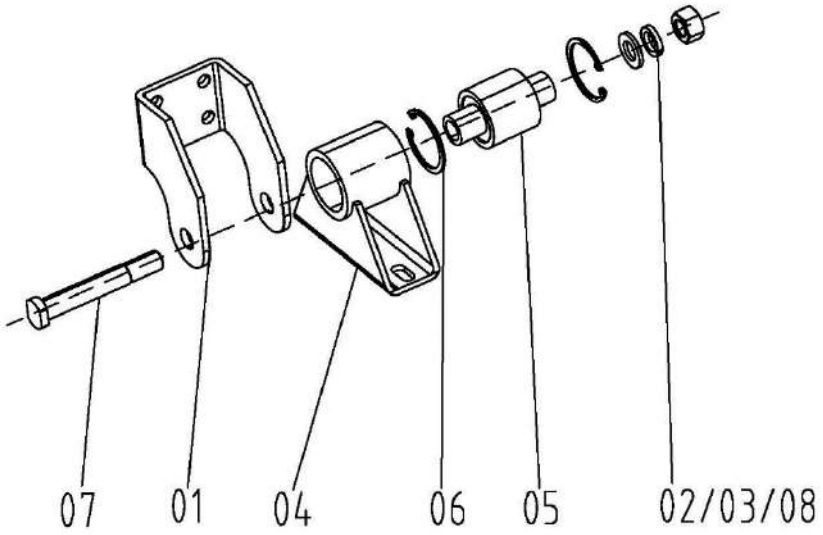

Inner-front Support, Engine W2.5DA-03FK-05-07A-00

No.	Description	Qty	Part Code	Remark
1	Connection Seat Weld, Upper	1	W2.5DA-03FK-05-07A-01-00	
2	Nut M16	1	GB/T6170-86	
3	Washer 16	1	GB/T97.1-85	
4	Shock-absorbing Seat Weld, Lower	1	W2.0-03-05-01-02-00	
5	Shock-absorbing Sleeve Assy	1	W2.0-03-05-01-03-00	Outsourcing
6	Circlip for Hole, 50	2	GB/T893.1-86	
7	Screw Rod	1	W2.5DA-03FK-05-07A-02	
8	Cushion 16	1	GB/T93-87	

Radiator Assy W2.5DA-09KQ-02-00

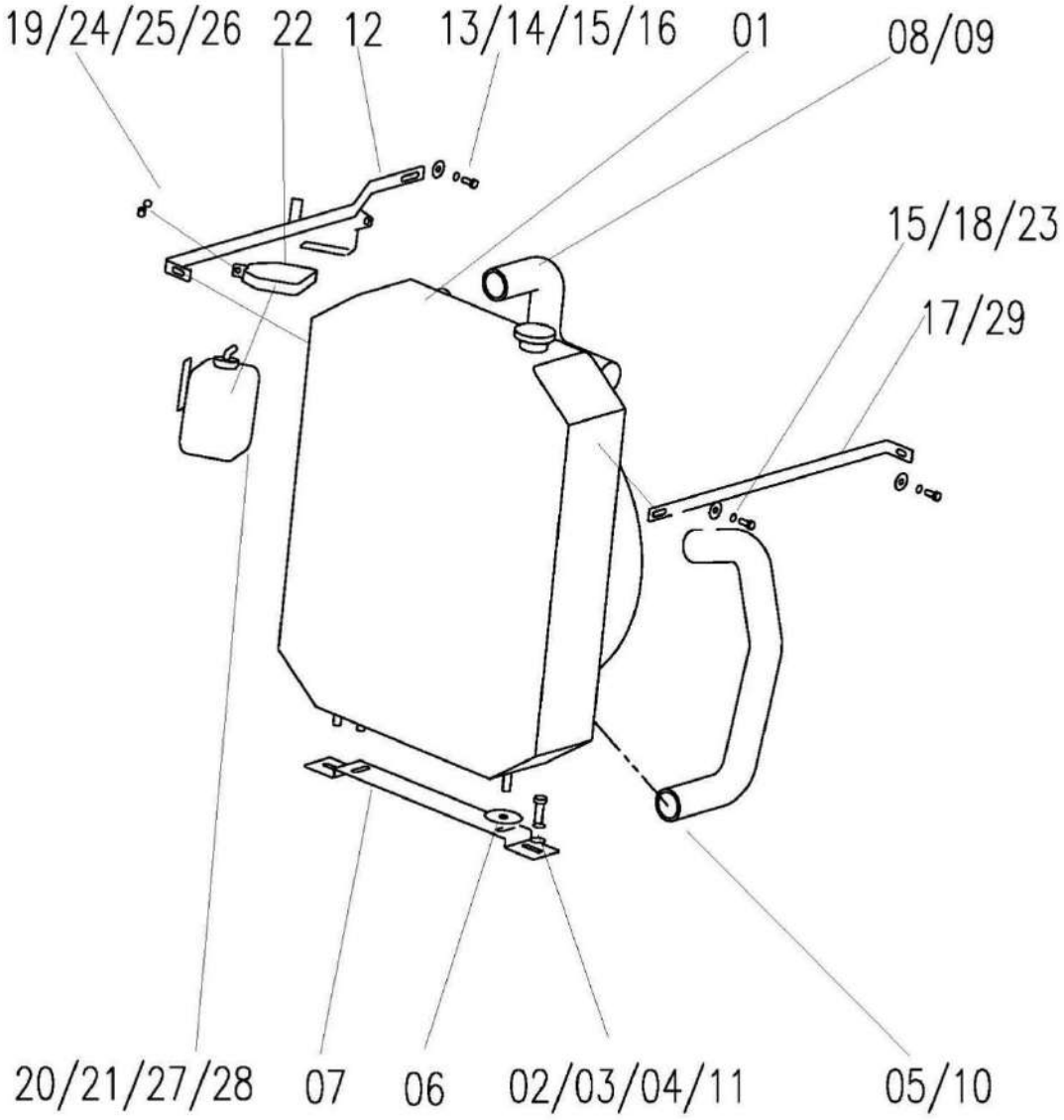

Radiator Assy W2.5DA-09KQ-02-00				
No.	**Description**	**Qty**	**Part Code**	**Remark**
1	Radiator	1	W2.5DA-09KQ-02-01-00	Outsourcing
2	Bolt M12X35	2	GB5783-86	
3	Washer, Plain 12	6	GB97.1-85	
4	Nut M12	6	GB6170-86	
5	Water Pipe, Lower	1	W2.5DA-09KQ-02-02	Outsourcing
6	Gasket, Water Tank	2	4LZ1.6.3C-06	Outsourcing
7	Seat, Water Tank	1	W2.5C-03-11-09-00	
8	Hose Clamp, Steel	4	45-50	Outsourcing
9	Water Pipe, Upper	1	W2.5DA-09KQ-02-03	Outsourcing
10	Spring, Lower Water Pipe	1	W2.0-03-11-01	
11	Cushion 12	2	GB93-87	
12	Rear Support Rod, Radiator	1	W2.5DA-03HK-11-08-00B	
13	Bolt M8X25	2	GB5783-86	
14	Washer, Plain 8	4	GB97.1-85	
15	Cushion 8	4	GB93-87	
16	Nut M8	2	GB6170-86	
17	Front Support Rod, Radiator	1	W2.5D-03-11-09	
18	Bolt M8X20	2	GB5783-86	
19	Bolt M6X25	1	GB5783-86	
20	Auxiliary Water Tank	1	W2.0-03B-11-10	Outsourcing
21	Clamp 12	2	Q673B	Outsourcing
22	Strap, Second Water	1	W2.5M-03F-11-07A	
23	Big Washer, Plain 8	2	GB96-85	
24	Washer, Plain 6	1	GB97.1-85	
25	Cushion 6	1	GB93-87	
26	Nut 6	1	GB6170-86	
27	Sponge Mats 1	1	W2.5M-03F-11-08	
28	Sponge Mats 2	1	W2.5M-03F-11-09	
29	Front Support Rod, Radiator	1	W2.5DA-03HK-11-09	

Fuel Tank Assy W2.5DA-09CK-03-00

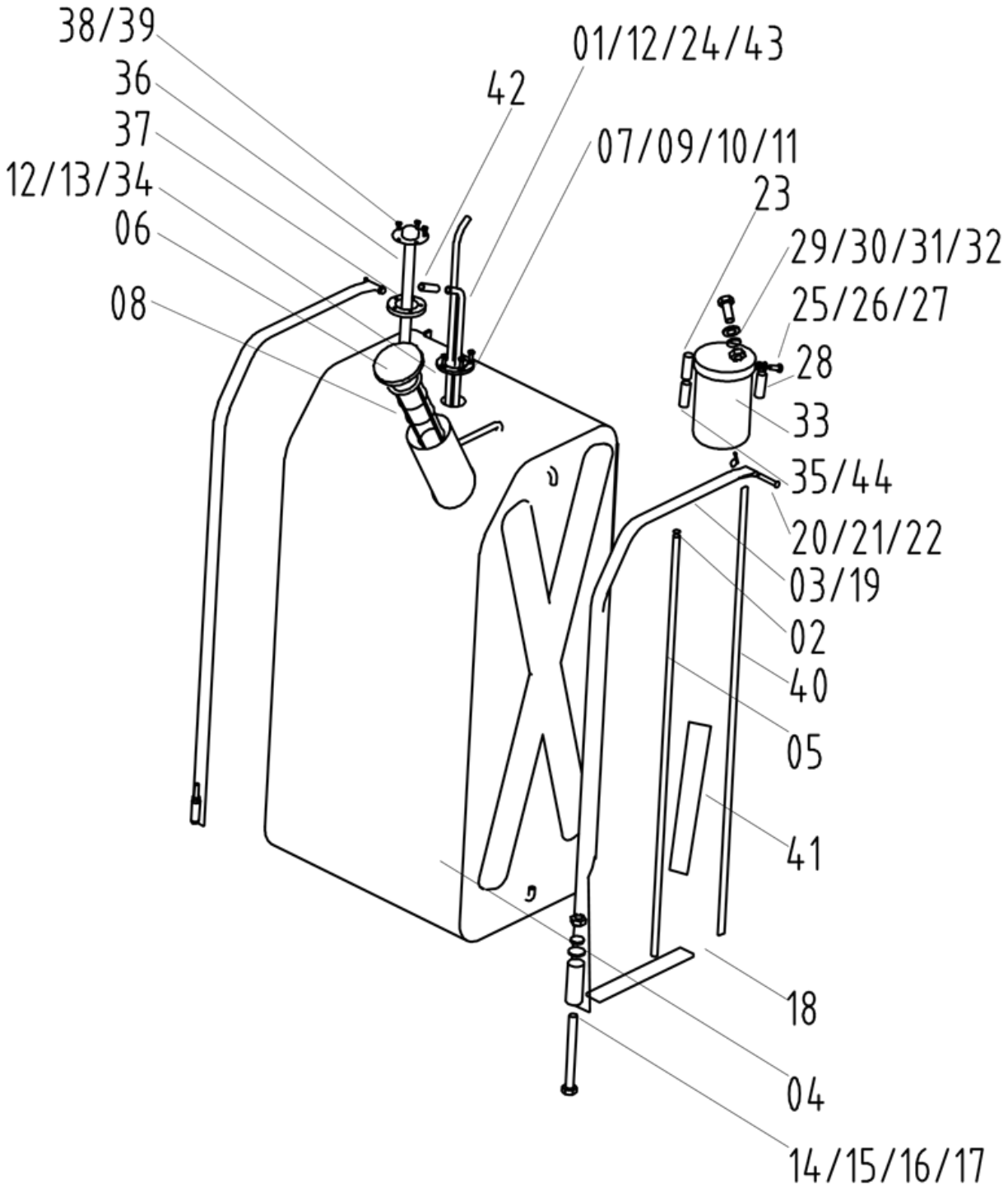

Fuel Tank Assy W2.5DA-09CK-03-00				
No.	**Description**	**Qty**	**Part Code**	**Remark**
1	Inlet Hose	1	W2.5DA-09CK-03-06	Other engine optional
2	Hose Clamp, Steel	2	9-13	
3	Strap, Fuel Tank	2	W2.5DA-09CK-03-02-00A	
4	Fuel Tank Weld	1	W2.5DA-09CK-03-01-00	
5	Oil Level Pipe	1	W2.5X-03-04-04	
6	Cover, Fuel Tank	1	WD.4FE.8.2	
7	Gasket	1	W2.0-03-04-06	
8	Filter	1	WD.4FE.8-02	
9	Bolt M6X16	5	GB/T5783-86	
10	Washer 6	5	GB/93-87	
11	Washer 6	5	GB97.1-85	
12	Hose Clamp, Steel	7	12-20	
13	Nylon Cable Tie	On Demand	ZD300X5	
14	Nut M8	6	GB6170-86	
15	Bolt M8X120	2	GB5783-86	
16	Washer 8	6	GB97.1-85	
17	Washer 8	2	GB93-87	
18	Sponge, Fuel Tank, Bottom	2	W2.5X-03-04-05	
19	Rubber Sleeve, Fuel Tank Strap	2	W2.5DA-09CK-03-04	
20	Pin Shaft B C8X50	2	GB882-86	
21	Pin 3.2X18	2	GB91-86	
22	Washer 8	2	GB97.1-85	
23	Bellows	1	W2.5DA-03H-04-10A	
24	Oil Returning Pipe	1	W2.5DA-03H-04-12	
25	Combine Washer 14	4	JB982-77	
26	Fuel Pipe Connector	2	W2.5DA-03H(B)-04-09	
27	Bolt M14X28	2	GB3541-83	
28	Inlet Pipe, Pre-filter	1	W2.5DA-03H-04-13	
29	Nut M10	2	GB6170-86	
30	Bolt M10X35	2	GB5783-86	
31	Washer 10	2	GB97.1-85	
32	Washer 10	2	GB93-87	
33	Pre-filter	1		comes with engine
34	Suction Pipe	1	W2.5X-03-04-08-00	
35	Outlet Hose, Fuel Tank	1	W2.5DA-09CK-03-07	Other engine optional
36	Oil Level Sensor	1	W2.5DA-09CK-03-03-00	
37	Sensor Rubber	1		by the fuel sensor manufacture

Fuel Tank Assy W2.5DA-09CK-03-00

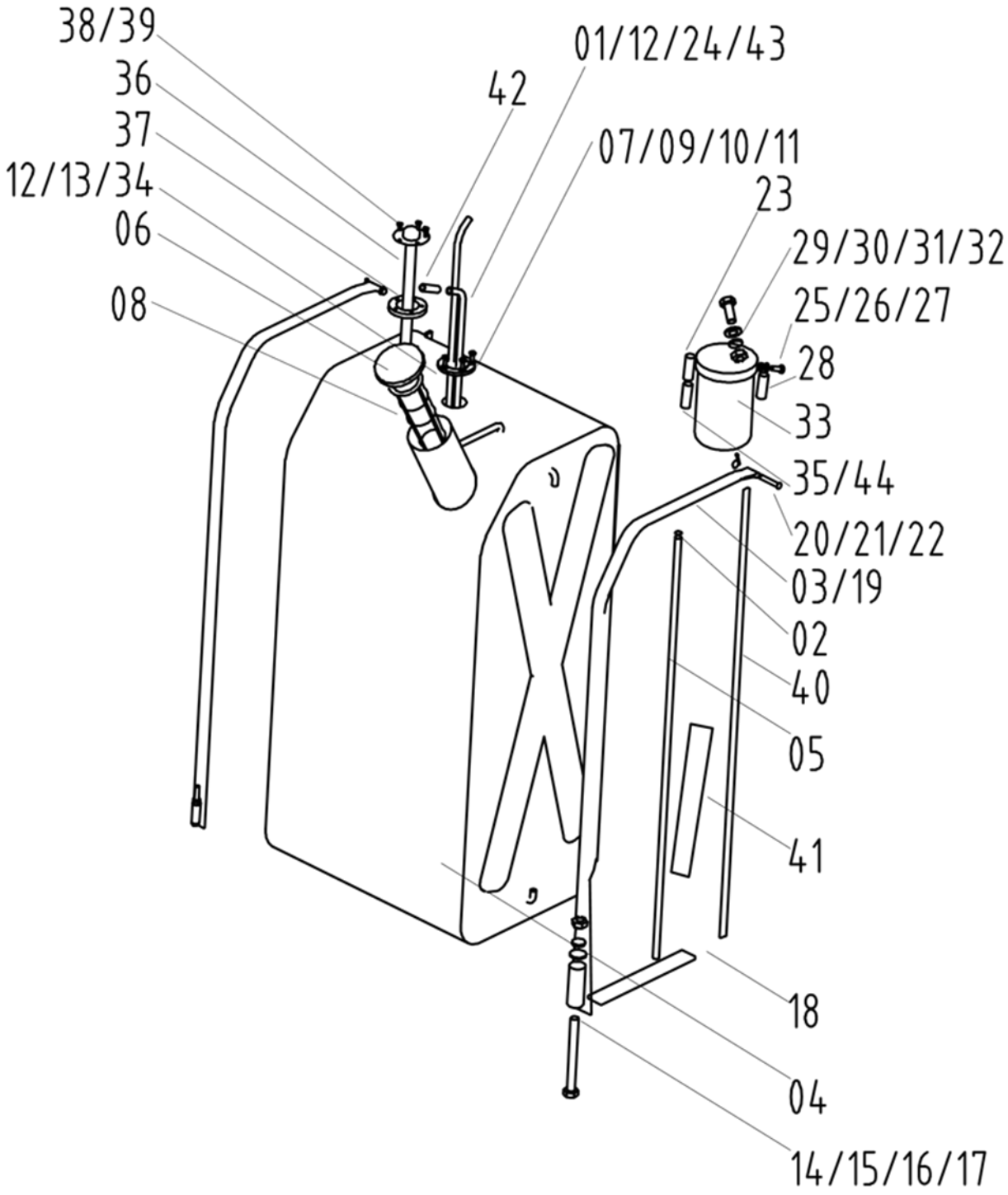

Fuel Tank Assy W2.5DA-09CK-03-00

No.	Description	Qty	Part Code	Remark
38	Screw M5X12	5	GB818-2000	by the fuel sensor manufacture
39	Washer 5	5	GB93-87	by the fuel sensor manufacture
40	Sponge, Fuel Tank	2	W2.5X-03-04-07	
41	Strip	2	W2.5DA-09CK-03-05	
42	Bellows	1	W2.5DA-03FK-04-09	
43	Inlet Pipe	1	W2.5DA-09CK-03-08	Changchai Engine Optional
44	Outlet Pipe	1	W2.5DA-09CK-03-09	Changchai Engine Optional

Suction Pipe Assy W2.5X-03-04-08-00

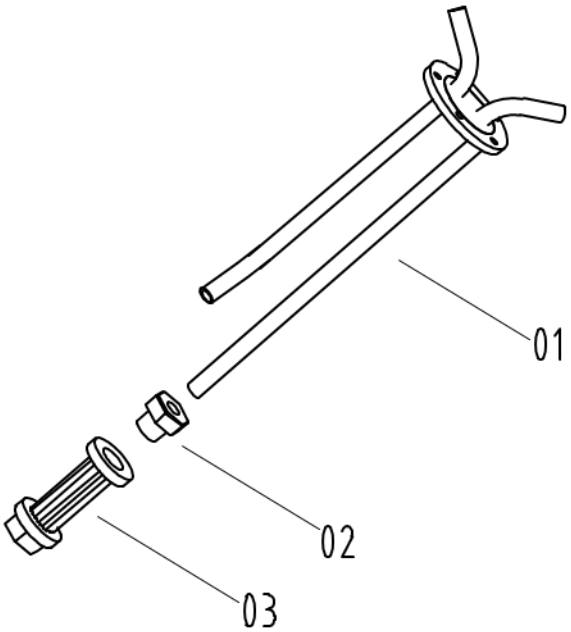

Suction Pipe Assy W2.5X-03-04-08-00

No.	Description	Qty	Part Code	Remark
1	Suction Pipe Assy	1	W2.5X-03-04-08-01-00	
2	Combine Washer 18	1	JB982-77	
3	Oil Suction Filter	1	W2.0-03-04-08-03	Outsourcing

Oil Level Sensor W2.5DA-09CK-03-03-00

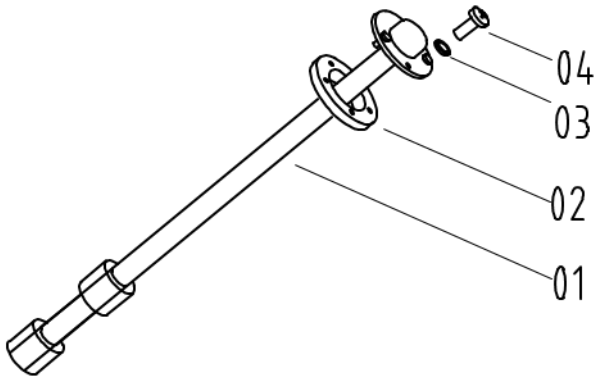

Oil Level Sensor W2.5DA-09CK-03-03-00

No.	Description	Qty	Part Code	Remark
1	Sensor	1	W2.5DA-09CK-03-03-01	
2	Rubber Gasket	1	W2.5X-03-04-03-02	
3	Cushion 5	5	GB93-87	
4	Screw M5X12	5	GB818-2000	

Fuel Tank Assy W2.5DA-09KQ-03-00

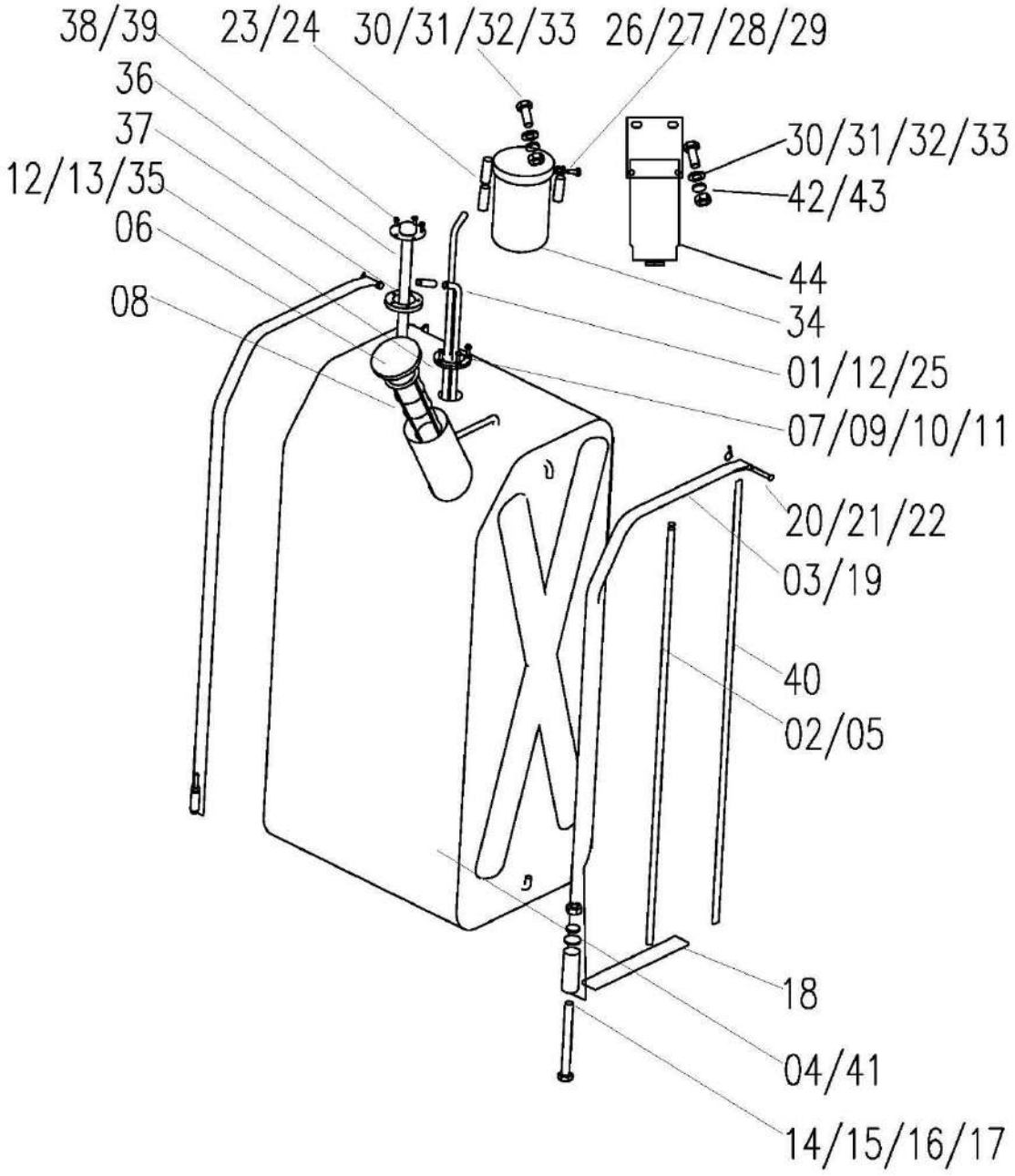

Fuel Tank Assy W2.5DA-09KQ-03-00				
No.	**Description**	**Qty**	**Part Code**	**Remark**
1	Inlet Hose	1	W2.5DA-09CK-03-08	
2	Hose Clamp, Steel	2	9-13	
3	Strap, Fuel Tank	2	W2.5DA-09KQ-03-02-00	
4	Fuel Tank Weld	1	W2.5DA-09KQ-03-01-00	
5	Oil Level Pipe	1	W2.5DA-09KQ-03-06	
6	Cover, Fuel Tank	1	WD.4FE.8.2	
7	Gasket	1	W2.0-03-04-06	
8	Filter	1	WD.4FE.8-02	
9	Bolt M6X16	5	GB/T5783	
10	Washer 6	5	GB/93	
11	Washer 6	5	GB/T97.1	
12	Hose Clamp, Steel	7	12-20	
13	Nylon Cable Tie	On Demand	ZD300X5	
14	Nut M8	6	GB/T6170	
15	Bolt M8X120	2	GB/T5783	
16	Washer 8	6	GB/T97.1	
17	Washer 8	2	GB/T93	
18	Sponge, Fuel Tank, Bottom	2	W2.5X-03-04-05	
19	Rubber Sleeve, Fuel Tank Strap	2	W2.5DA-09KQ-03-04	
20	Pin Shaft B C8X50	2	GB/T882	
21	Pin 3.2X18	2	GB/T91	
22	Washer 8	2	GB/T97.1	
23	Oil tank outlet pipe	1	W2.5DA-09CK-03-09	
24	Bellows	1	W2.5X-03-04-11	
25	Oil Returning Pipe	1	W2.5DA-03H-04-12	
26	Combination washer 14	4	JB/T982	
27	Fuel Pipe Connector	2	W2.5DA-03H(B)-04-09	
28	Hinged bolt M14x1.5x28	2	GB/T3541	
29	Inlet Pipe, Pre-filter	1	W2.5DA-03H-04-13	
30	Nut M10	6	GB/T6170	
31	Bolt M10X35	4	GB/T5783	
32	Washer 10	6	GB/T97.1	
33	Washer 10	6	GB/T93	
34	Suction Pipe	1		Come with Engine
35	Outlet Hose, Fuel Tank	1	W2.5DA-09KQ-03-08-00	
36	Oil Level Sensor	1	W2.5DA-09KQ-03-03-00	

Fuel Tank Assy W2.5DA-09KQ-03-00

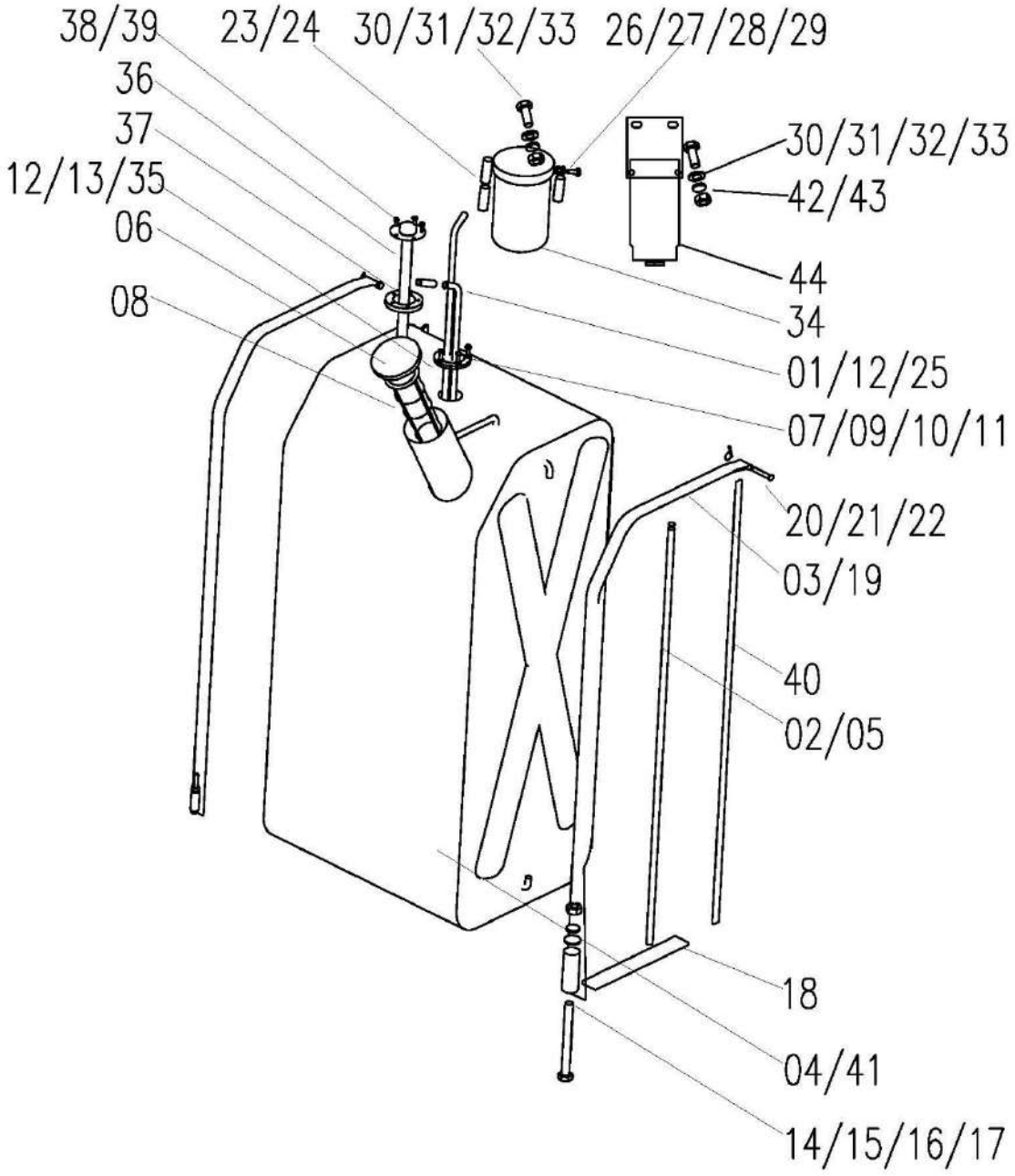

Fuel Tank Assy W2.5DA-09KQ-03-00				
No.	Description	Qty	Part Code	Remark
37	Sensor Rubber	1		by the fuel sensor manufacture
38	Screw M5X12	5	GB/T818	by the fuel sensor manufacture
39	Washer 5	5	GB/T93	by the fuel sensor manufacture
40	Sponge, Fuel Tank	2	W2.5DA-09KQ-03-07	
41	Strip	2	W2.5DA-09KQ-03-05	
42	Inlet Pipe, Electronic Pump Filter	1	W3.5H-09A-02B-06	Changchai Engine Optional
43	Bolt M10X50	2	GB/T5783	Changchai Engine Optional
44	Electronic Pump Filter	1		Changchai Engine Optional

Oil Level Sensor W2.5DA-09KQ-03-03-00

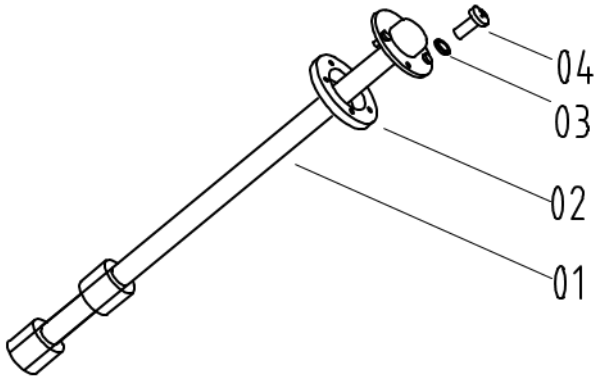

Oil Level Sensor W2.5DA-09KQ-03-03-00

No.	Description	Qty	Part Code	Remark
1	Sensor	1	W2.5DA-09KQ-03-03-01	1
2	Rubber Gasket	1	W2.5X-03-04-03-02	2
3	Cushion 5	5	GB93-87	3
4	Screw M5X12	5	GB818-2000	4

Note

Engine Assy W2.5DA-09KQ-01QC-00

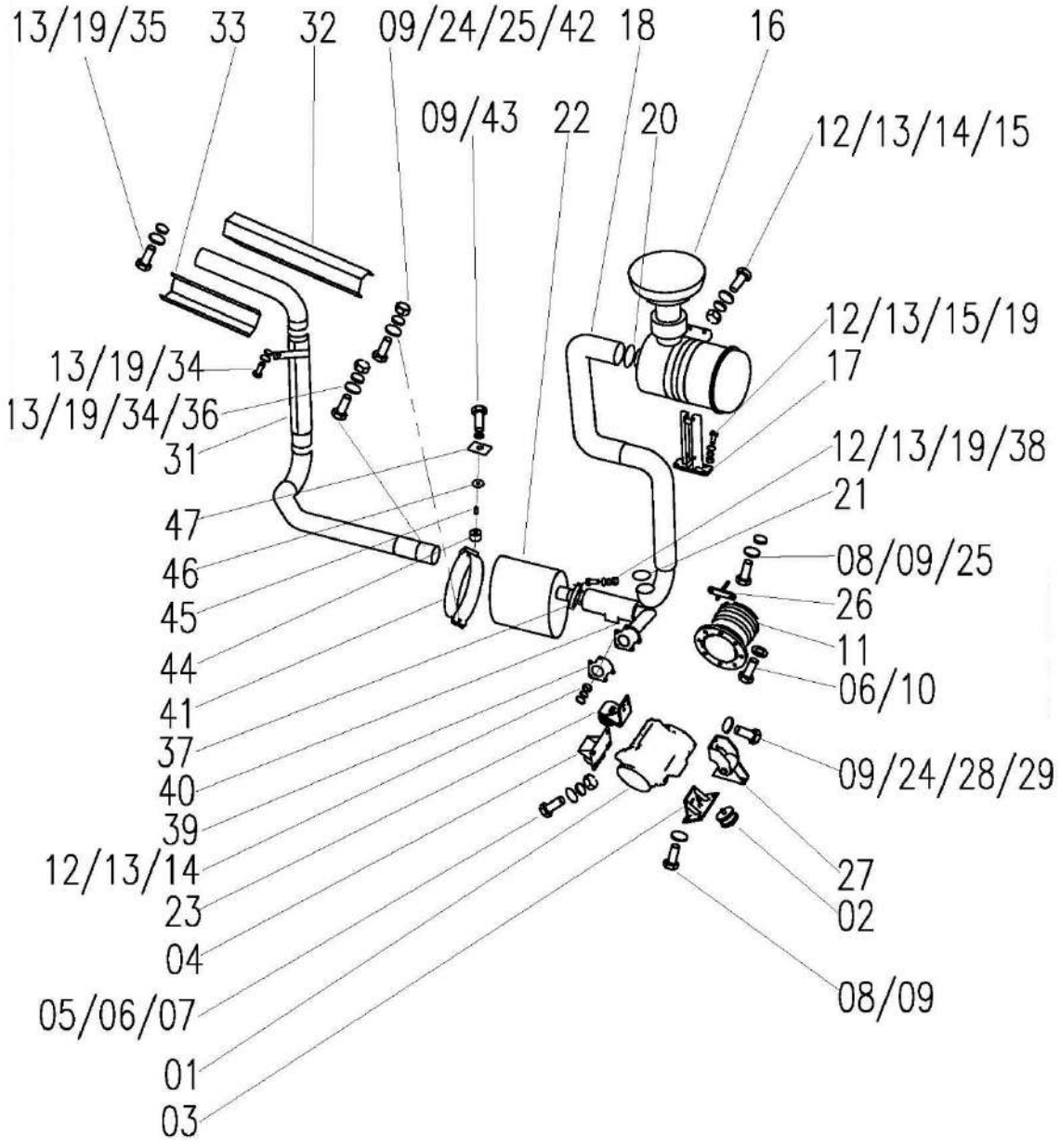

Engine Assy W2.5DA-09KQ-01QC-00				
No.	**Description**	**Qty**	**Part Code**	**Remark**
1	Quanchai 88HP	1	C06-406	
2	Shock-absorbing Gasket	3	W2.0-03-05-09-00	Outsourcing
3	Outer-front Support, Engine	1	W2.5DA-09KQ-01QC-01-00	
4	Outer-Rear Support, Engine	1	W2.5DA-09KQ-01QC-02-00	
5	Nut M12X1.5	6	GB6176-86	
6	Cushion 12	6	GB93-87	
7	Big Washer 12	6	GB96-85	
8	Bolt M10X25	18	GB5783-86	10.9level
9	Cushion 10	22	GB93-87	
10	Bolt M12X40	6	GB5783-86	
11	Pulley, Engine	1	W2.5C-03D-05G-02	
12	Nut M8	11	GB6170-86	
13	Cushion 8	20	GB93-87	
14	Washer, Plain 8	8	GB97.1-85	
15	Bolt M8X20	6	GB5783-86	
16	Self-dusting Air Filter Assy	1	K35C9-A	
17	Fixing Frame, Air Filter	1	W2.5D-03-05-09-00	
18	Intake Hose Assy	1	W2.5DA-03FK-05QC-08-00	
19	Big washer, Plain 8	11	GB96-85	
20	Hose Clamp, Steel 60-80	1	Q67676	
21	Hose Clamp, Steel 70-90	1	Q67676	
22	Silencer	1	W2.5DA-03FK-05-02B-00SP	
23	Inner-rear Support, Engine	1	W3.5-09Q-01YC-01-00	
24	Nut M10	3	GB6170-86	
25	Washer, Plain 10	3	GB97.1-85	
26	Upper Limited Rod, Belt	1	W2.5C-03G(Q)-05-05-00	
27	Inner-front Support, Engine	1	W2.5DA-09CK-01YC-01A-00	
28	Bolt M10X30	2	GB5783-86	
29	Big Washer, Plain 10	4	GB96-85	
30	Bolt M8X25	4	GB5783-86	
31	Exhaust Pipe 2	1	W2.5DA-03FK-05-03B-00SP	
32	Upper Cover	1	W2.5DA-03EK-05-03SP	
33	Lower Cover	1	W2.5DA-03EK-05-04SP	
34	Bolt M8X20	2	GB5783-86	
35	Bolt M8X14	6	GB5783-86	
36	Big Washer, Plain 8	4	GB96-85	

Engine Assy W2.5DA-09KQ-01QC-00

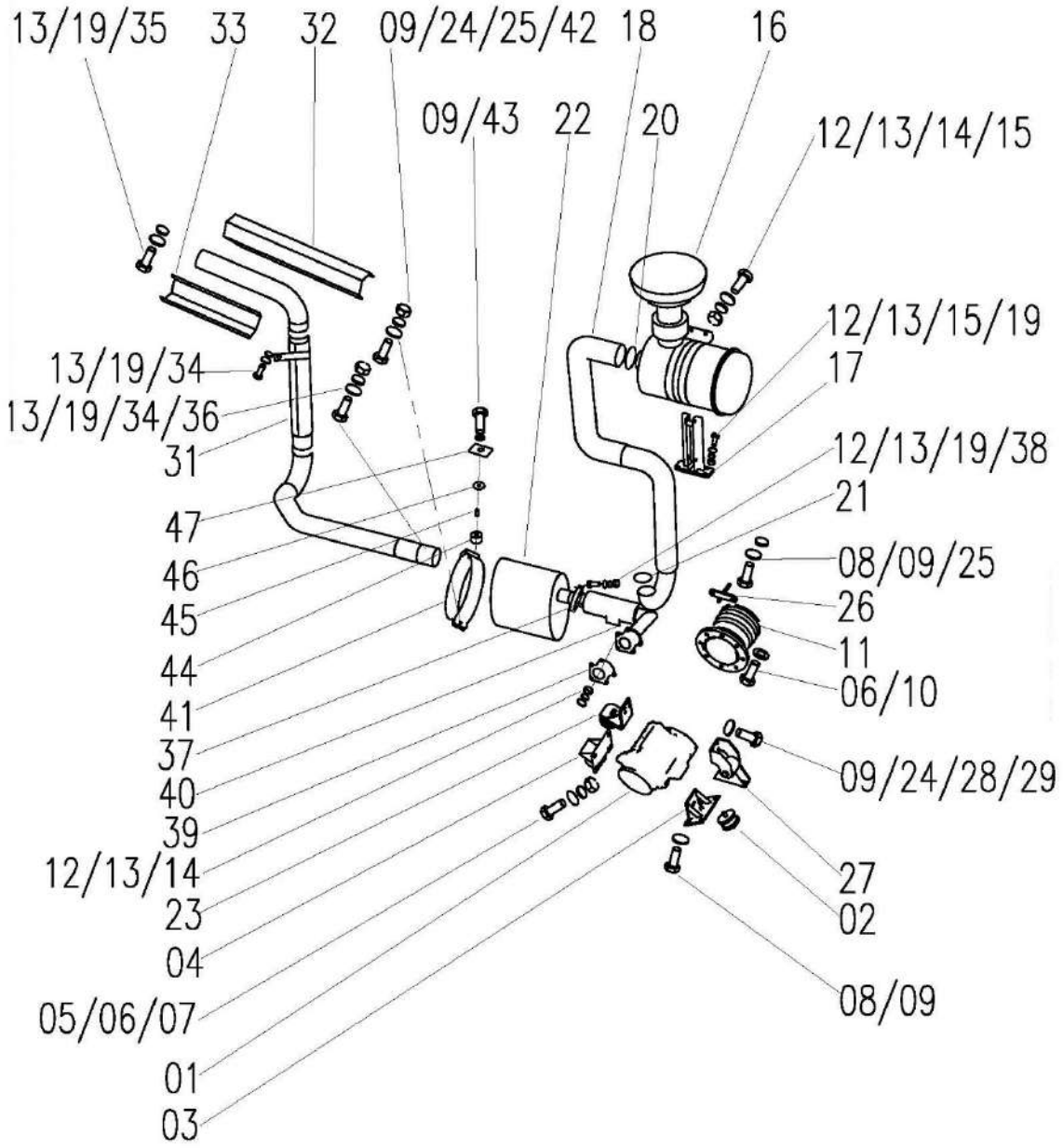

Engine Assy W2.5DA-09KQ-01QC-00				
No.	**Description**	**Qty**	**Part Code**	**Remark**
37	Hoop	1	W2.2-09A-01-18	
38	Bolt M8X55	1	GB5783-86	
39	Gasket, Exhaust Hose	1	W2.5DA-03EK-05-15	
40	Exhaust Pipe	1	W2.5DA-03FK-05QC-01-00	
41	Hoop Weld	1	W2.5DA-03FK-05-05-00	
42	Bolt M10×60	1	GB/T5783-86	
43	Bolt M10×55	1	GB5783-86	
44	Cushion	1	WD.20-03	
45	Shock-absorbing Sleeve	1	W2.5DA-03H-05-13	
46	Washer	1	W2.5DA-03FK-05-02B-12SP	
47	Washer, Square	1	W2.5DA-03FK-05-02B-13SP	

Intake Hose Assy W2.5DA-03FK-05QC-08-00

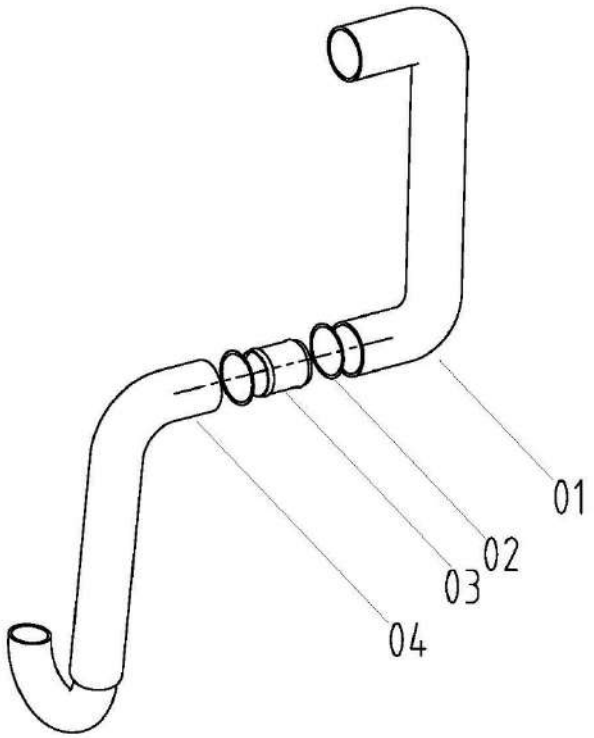

Intake Hose Assy W2.5DA-03FK-05QC-08-00

No.	Description	Qty	Part Code	Remark
1	Intake Hose A	1	W2.5DA-03H-05A-08-01	Outsourcing
2	Hose Clamp 70-90, Steel	2		Outsourcing
3	Intake Connecting Pipe	1	W2.0M-33-05-08-02	
4	Intake Hose B	1	W2.5DA-03FK-05QC-08-01	Outsourcing

Inner-front Support, Engine W2.5DA-09CK-01YC-01A-00

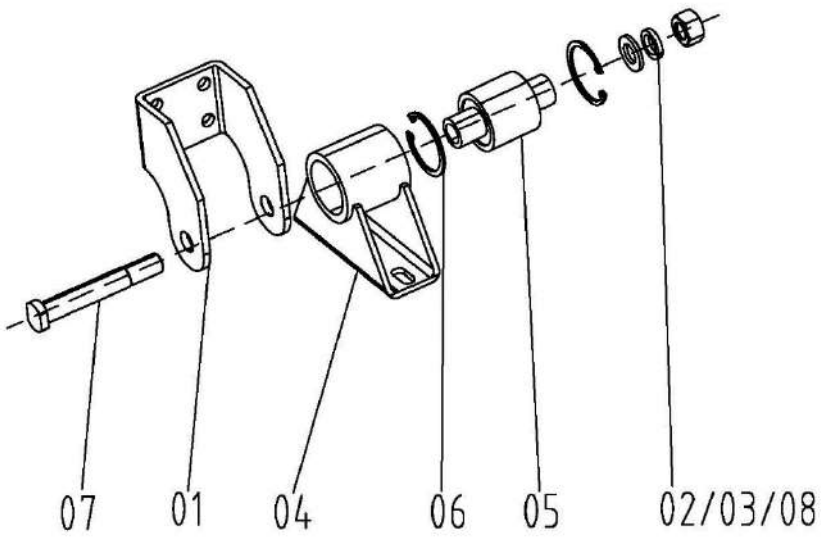

Inner-front Support, Engine W2.5DA-09CK-01YC-01A-00

No.	Description	Qty	Part Code	Remark
1	Connection Seat Weld, Upper	1	W2.5DA-09CK-01YC-01A-01-00	
2	Nut M16	1	GB/T6170-86	
3	Washer 16	1	GB/T97.1-85	
4	Shock-absorbing Seat Weld, Lower	1	W2.5DA-03YC-05-04-02-00	
5	Shock-absorbing Sleeve Assy	1	W2.0-03-05-01-03-00	Outsourcing
6	Circlip for Hole, 50	2	GB/T893.1-86	
7	Screw Rod	1	W2.5DA-03FK-05-07A-02	
8	Cushion 16	1	GB/T93-87	

Radiator Assy W2.5DA-09KQ-02QC-00

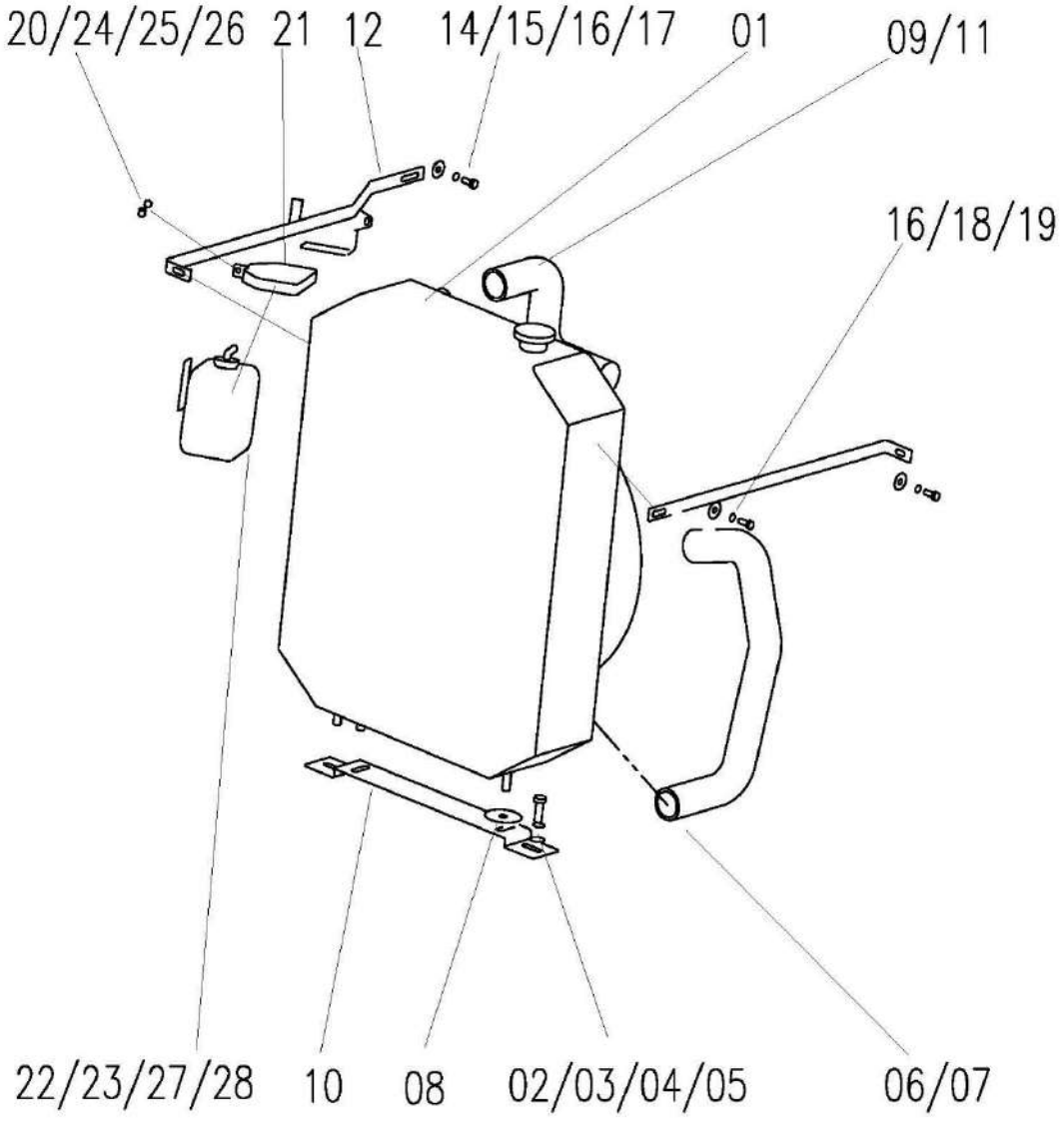

Radiator Assy W2.5DA-09KQ-02QC-00				
No.	**Description**	**Qty**	**Part Code**	**Remark**
1	Radiator	1	W2.5DA-09KQ-02QC-01-00	
2	Bolt M12X35	2	GB5783-86	
3	Washer, Plain 12	6	GB97.1-85	
4	Nut M12	6	GB6170-86	
5	Cushion 8	2	GB93-87	
6	Water Pipe, Lower	1	W2.5DA-09KQ-02QC-03	
7	Spring, Water Pipe, Lower	1	W2.0-03-11-01	
8	Gasket, Water Tank	2	4LZ1.6.3C-06	
9	Hose Clamp 45-50	4		Outsourcing
10	Seat, Water Tank	1	W2.5C-03-11-09-00	
11	Water Pipe, Upper	1	W2.5DA-09KQ-02QC-02	
12	Rear Support Rod, Radiator	1	W2.5DA-03FK-11QC-08A-00	
13	Front Support Rod, Radiator	1	W2.5DA-03HK-11-09	
14	Bolt M8X25	2	GB5783-86	
15	Washer, Plain 8	4	GB97.1-85	
16	Cushion 8	6	GB93-87	
17	Nut M8	2	GB6170-86	
18	Bolt M8X20	4	GB5783-86	
19	Big Washer, Plain 8	4	GB96-85	
20	Bolt M6X35	1	GB5783-86	
21	Strap, Auxiliary Water Tank	1	W2.5M-03F-11-07B-00	
22	Auxiliary Water Tank	1	W2.0-03B-11-10	
23	Clamp 12	2	Q673B	
24	Washer, Plain 6	1	GB97.1-85	
25	Cushion 6	1	GB93-87	
26	Nut 6	1	GB6170-86	
27	Sponge Mats 1	1	W2.5M-03F-11-08	
28	Sponge Mats 2	1	W2.5M-03F-11-09	

Engine Assy W2.5DA-09KQ-01XC-00

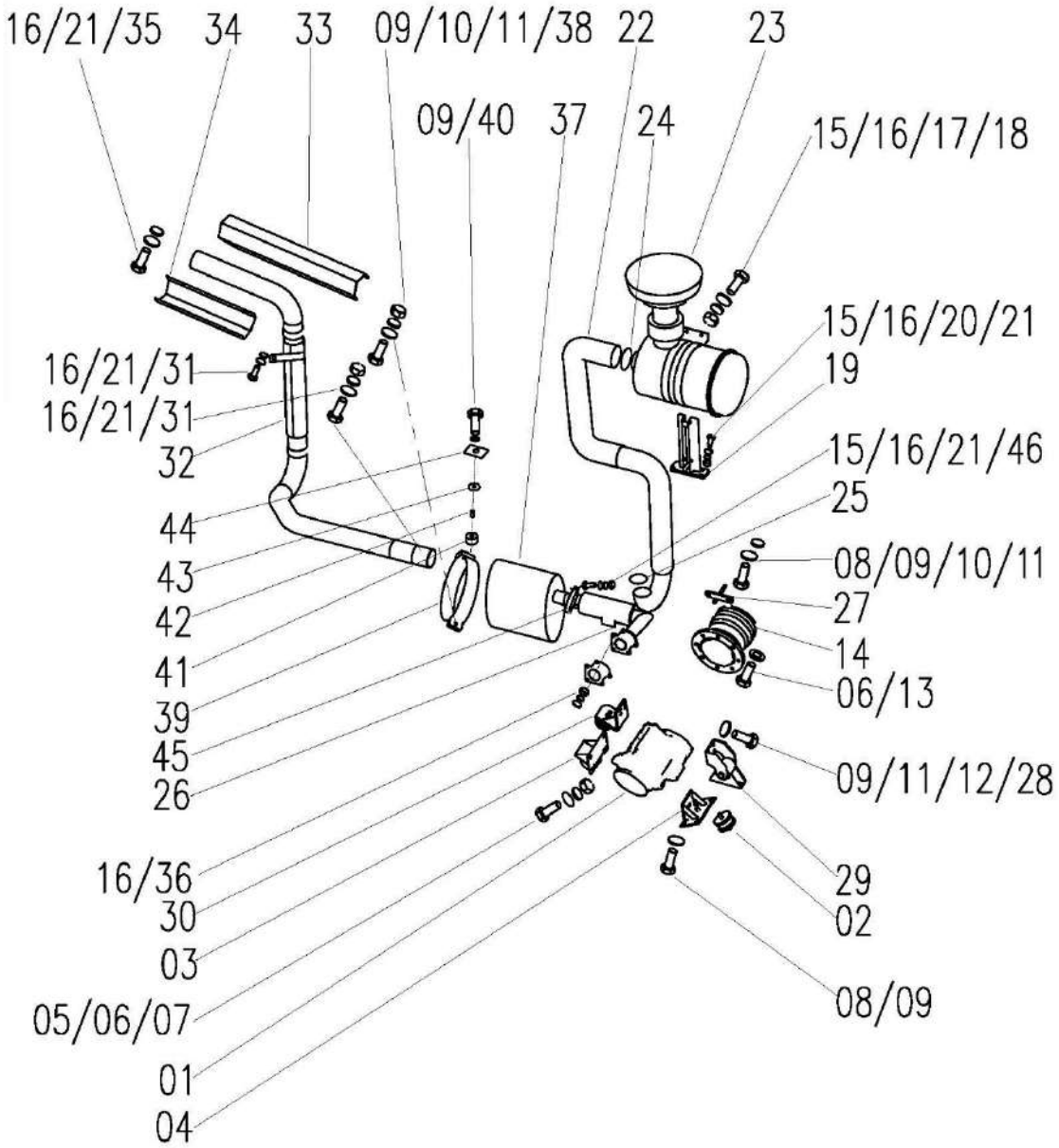

Engine Assy W2.5DA-09KQ-01XC-00				
No.	**Description**	**Qty**	**Part Code**	**Remark**
1	Xinchai 88HP, State 2	1	A498BZT-065	
2	Shock-absorbing Gasket	3	W2.0-03-05-09-00	Outsourcing
3	Outer-rear Support, Engine	1	W2.5DA-09KQ-01XC-02-00	
4	Outer-front Support, Engine	1	W2.5DA-09KQ-01XC-01-00	
5	Nut M12X1.5	6	GB/T6176	
6	Cushion 12	12	GB/T93	
7	Big Washer 12	6	GB/T96	
8	Bolt M10X25	18	GB/T5783	
9	Cushion 10	22	GB/T93	
10	Washer, Plain 10	5	GB/T97.1	
11	Nut M10	5	GB/T6170	
12	Big Washer, Plain 10	4	GB/T96	
13	Bolt M12X40	6	GB/T5783	
14	Engine Belt Pulley	1	W2.5C-03D-05G-02	
15	Nut M8	7	GB/T6170	
16	Cushion 8	33	GB/T93	
17	Bolt M8X20	6	GB/T5783	
18	Washer, Plain 8	4	GB/T97.1	
19	Fixing Frame, Air Filter	1	W2.5D-03-05-09-00	
20	Bolt M8X25	2	GB/T5783	
21	Big Washer, Plain 8	30	GB/T96	
22	Intake Hose Assy	1	W2.5DA-03XC-05-08-00	
23	Self-dusting Air Filter	1	K35C9-A	
24	Hose Clamp, Steel 60-80	1	Q67676	
25	Hose Clamp, Steel 60-90	1	Q67676	
26	Exhaust Pipe	1	W2.5DA-03FK-05XC-01-00SP	
27	Rod Weld, Limiter, Belt	1	W2.5DA-03XC-05-06-00	
28	Bolt M10X30	2	GB/T5783	
29	Inner-front Supporter, Engine	1	W2.5DA-09CK-01YC-01A-00	
30	Inner-rear Supporter, Engine	1	W3.5-09Q-01YC-01-00	
31	Bolt M8X20	9	GB/T5783	
32	Exhaust Pipe Weld 2	1	W2.5DA-03FK-05-03B-00SP	
33	Upper Cover	1	W2.5DA-03EK-05-03SP	
34	Lower Cover	1	W2.5DA-03EK-05-04SP	
35	Bolt M8X14	10	GB/T5783	
36	Bolt M8X30	5	GB/T5783	

Engine Assy W2.5DA-09KQ-01XC-00

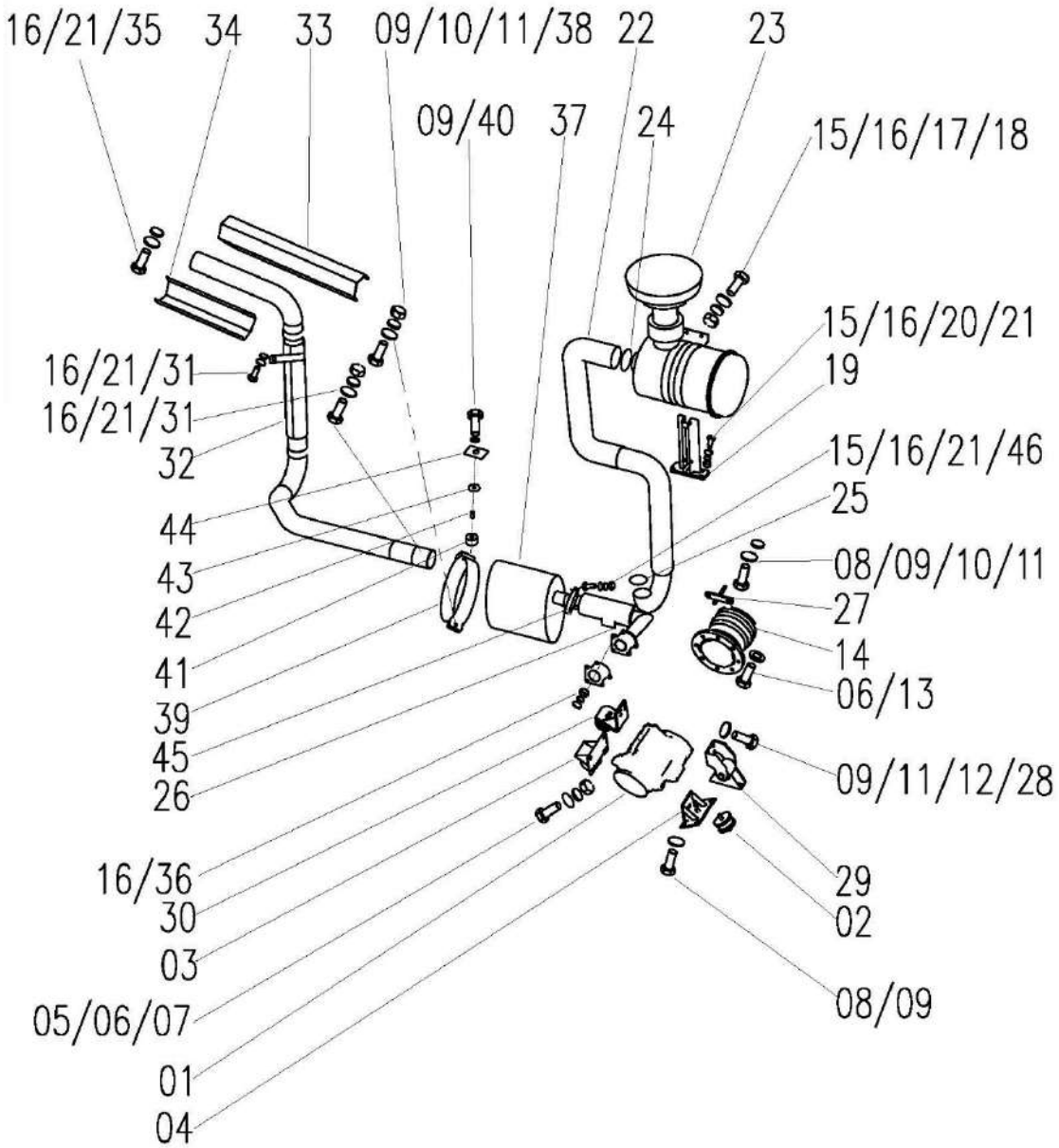

Engine Assy W2.5DA-09KQ-01XC-00				
No.	**Description**	**Qty**	**Part Code**	**Remark**
37	Silencer Weld	1	W2.5DA-03FK-05-02B-00SP	
38	Bolt M10×60	1	GB/T5783	
39	Hoop	1	W2.5DA-03FK-05-05-00	
40	Bolt M10×55	1	GB/T5782	
41	Cushion	1	WD.20-03	
42	Shock-absorbing Sleeve	1	W2.5DA-03H-05-13	
43	Washer	1	W2.5DA-03FK-05-02B-12SP	
44	Washer, Square	1	W2.5DA-03FK-05-02B-13SP	
45	Hoop	1	W2.2-09A-01-18A	Outsourcing
46	Bolt M8X55	1	GB/T5783	
47	Xinchai 90HP, State 2	1	4D35ZT-017	
48	Exhaust Pipe	1	W3.5H-09A-01XC-01-00	

Intake Hose Assy W2.5DA-03XC-05-08-00

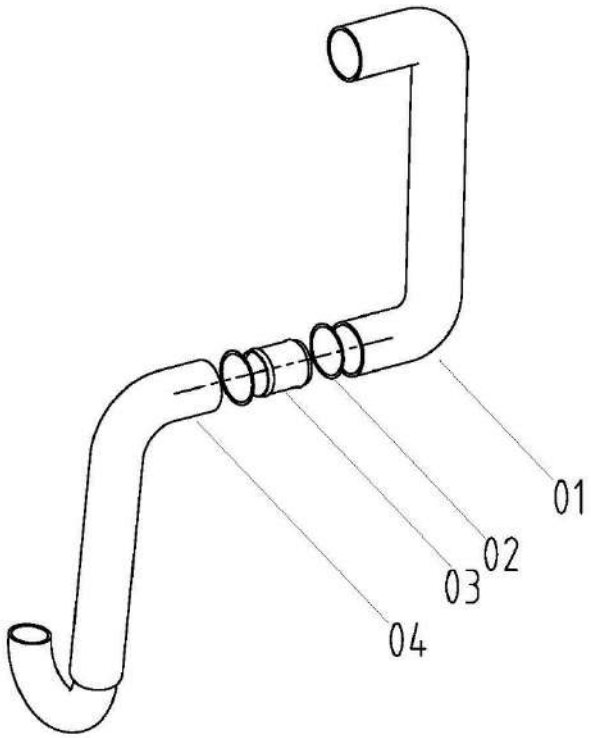

Intake Hose Assy W2.5DA-03XC-05-08-00

No.	Description	Qty	Part Code	Remark
1	Intake Hose A	1	W2.5DA-03H-05A-08-01	Outsourcing
2	Hose Clamp 70-90, Steel	2		Outsourcing
3	Intake Connecting Pipe	1	W2.0M-33-05-08-02	
4	Intake Hose B	1	W2.5DA-03XC-05-08-03	Outsourcing

Inner-front Support, Engine W2.5DA-09CK-01YC-01A-00

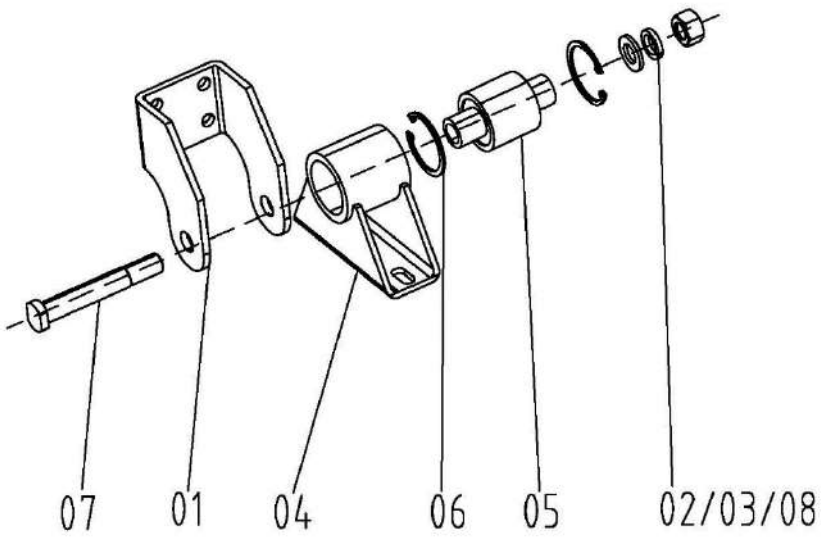

Inner-front Support, Engine W2.5DA-09CK-01YC-01A-00

No.	Description	Qty	Part Code	Remark
1	Connection Seat Weld, Upper	1	W2.5DA-09CK-01YC-01A-01-00	
2	Nut M16	1	GB/T6170-86	
3	Washer 16	1	GB/T97.1-85	
4	Shock-absorbing Seat Weld, Lower	1	W2.5DA-03YC-05-04-02-00	
5	Shock-absorbing Sleeve Assy	1	W2.0-03-05-01-03-00	Outsourcing
6	Circlip for Hole, 50	2	GB/T893.1-86	
7	Screw Rod	1	W2.5DA-03FK-05-07A-02	
8	Cushion 16	1	GB/T93-87	

Radiator Assy W2.5DA-09KQ-02XC-00

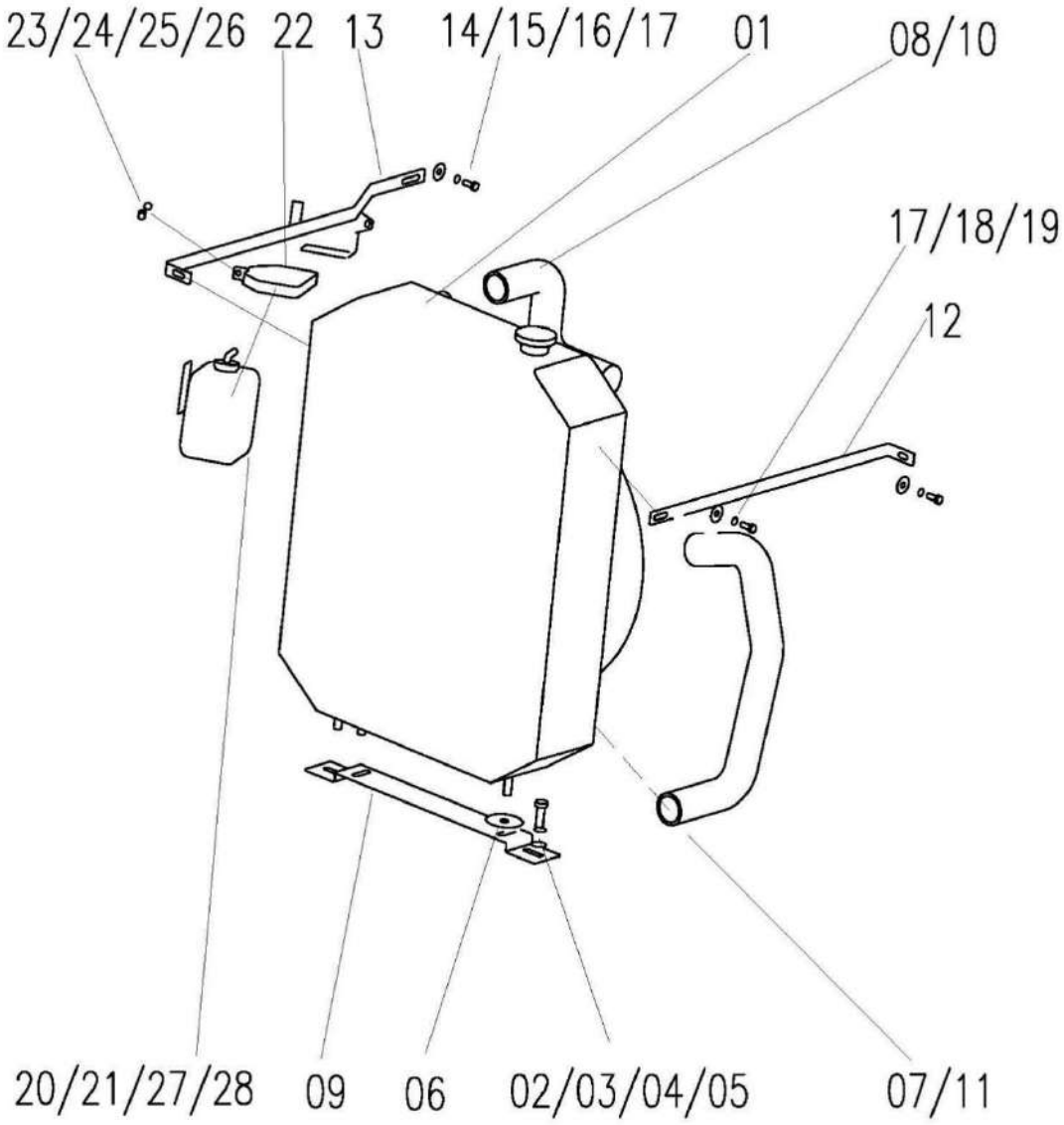

Radiator Assy W2.5DA-09KQ-02XC-00				
No.	**Description**	**Qty**	**Part Code**	**Remark**
1	Radiator	1	W3.5H-09A-02XC-01-00	
2	Bolt M12X30	2	GB/T5783	
3	Washer, Plain 12	4	GB/T97.1	
4	Nut M12	6	GB/T6170	
5	Cushion 12	2	GB/T93	
6	Gasket, Water Tank	2	4LZ1.6.3C-06	
7	Water Pipe, Lower	1	W2.5DA-03XC-11-03	
8	Water Pipe, Upper	1	W2.5DA-03XC-11-02	
9	Seat, Water Tank	1	W2.5DA-03XC-11-04A-00	
10	Hose Clamp, Steel	4	45-50	
11	Spring, Down Water Pipe	1	W2.0-03-11-01	
12	Front Support Rod, Radiator	1	W2.5DA-03HK-11-09	
13	Rear Support Rod, Radiator	1	W2.5DA-03XC-11-05A-00	
14	Bolt M8X25	2	GB/T5783	
15	Washer, Plain 8	3	GB/T97.1	
16	Nut 8	3	GB/T6170	
17	Cushion 8	5	GB/T93	
18	Bolt M8X20	2	GB/T5783	
19	Big Washer, Plain 8	2	GB/T96	
20	Auxiliary Water Tank	1	W2.0-03B-11-10	
21	Clamp 12	2	Q673B	
22	Strap, Auxiliary Water Tank	1	W2.5M-03F-11-07B-00	
23	Washer, Plain 6	1	GB/T97.1	
24	Cushion 6	1	GB/T93	
25	Nut 6	1	GB/T6170	
26	Bolt M6X25	1	GB/T5783	
27	Sponge Mats 1	1	W2.5M-03F-11-08	
28	Sponge Mats 2	1	W2.5M-03F-11-09	
29	Hose Clamp, Steel	1	W3.5H-09A-02XC-02	

Ⅷ.Electrical Part

Electrical Assy Detail List (Canopy Model)

No.	Description	Qty	Part Code	Remark
1	Sensor, Grain Tank	1	JCK-1	
2	Preheat Starting Relay (12V)	1	JD155	
3	Steering Switch	1	JK1121A	
4	Starting Cable Assy	1	JK430	
5	Reverse Horn Switch	1	JK635A	
6	Main Power Switch	1	JK861	
7	Side Mirror	1	W2.0-01-11-00	
8	Sensor, Water Temperature	1	W2.0-06-01-15-00	
9	Sensor, Rotating Speed	1	W2.0-06-01-16-00	
10	Main Clutch Safety Switch	2	W2.0-06-01-17-00	
11	Motor	1	W2.5B-04BX-12-03B-01	
12	Center Control Box (12V)	1	W2.5C-06-01-19-00	
13	Combination Switch	1	W2.5C-06-01-20-00	
14	Switch Box	1	W2.5DA-07-02-25	
15	Oil Level Sensor	1	W3.5H-09-02-01	
16	Front Lamp (12V)	2	WD-150.07.01.02A	
17	Steering Lamp (12V)	2	WD-150.07.01.03	
18	Front Lamp (12V)	1	WD-150-07.01.02B	
19	Horn (12V)	1	DL128G/DL129G	
20	Combination Instrument	1	W2.5DA-06-01-18-00	
21	Combination Instrument	1	W2.5DA-06-01Y-18C-01	
22	Front Lamp	1	WD-150-07.01.02C	
23	Operation Lamp	1	WD-150-07.03.03B	
24	Sensor	1	W2.5B-04BX-12-03B-06B	
25	Oil Level Sensor	1	W2.5DA-03EK-04-09	
26	LED Grain Tank Alarm Lamp	1	W2.5DA-05-01-20-01	
27	Alarm, Grain Tank	1	W2.5DA-05-01-20-02	
28	Motor Module	1	W2.5B-04BX-12-03B-02C	
29	Electronic Sensor, Oil Pressure	1	0	
30	Sensor, Auger Speed	1	WD-150-07.03.01	

Electrical Assy Detail List (Cab model)

No.	Description	Qty	Part Code	Remark
1	Sensor, Grain Tank	1	JCK-1	
2	Preheat Starting Relay (12V)	1	JD155	
3	Steering Switch	1	JK1121A	
4	Starting Cable Assy	1	JK430	
5	Reverse Horn Switch	1	JK635A	
6	Main Power Switch	1	JK861	
7	Side Mirror	1	W2.0-01-11-00	
8	Sensor, Water Temperature	1	W2.0-06-01-15-00	
9	Sensor, Rotating Speed	1	W2.0-06-01-16-00	
10	Main Clutch Safety Switch	2	W2.0-06-01-17-00	
11	Motor	1	W2.5B-04BX-12-03B-01	
12	Center Control Box	1	W2.5C-06-01-19-00	
13	Combination Switch	1	W2.5C-06-01-20-00	
14	Switch Box	1	W2.5DA-07-02-25	
15	Oil Level Sensor	1	W3.5H-09-02-01	
16	LED Front Lamp	2	W2.5C-06-01-12	
17	Steering Lamp	2	WD-150.07.01.03	
18	LED Front Lamp	1	W2.5C-06-01-11	
19	Horn	1	DL128G/DL129G	
20	Combination Instrument	1	W2.5C-06-01Y-18C-01	
21	LED Front Lamp	1	W2.5C-06-01-13	
22	Operation Lamp	1	WD-150-07.03.03B	
23	Sensor	1	W2.5B-04BX-12-03B-06B	
24	Oil Level Sensor	1	W2.5DA-03EK-04-09	
25	LED Grain Tank Alarm Lamp	1	W2.5DA-05-01-20-01	
26	Alarm, Grain Tank	1	W2.5DA-05-01-20-02	
27	Motor Module	1	W2.5B-04BX-12-03B-02C	
28	Electronic Sensor, Oil Pressure	1	12V	
29	Sensor, Auger Speed	1	WD-150-07.03.01	
30	Interior lights	1	12V	
31	Fan wiper warm air switch	1	三联	

2.2m Header and Conveyor

Header and Conveyor W3.5HC-01-00

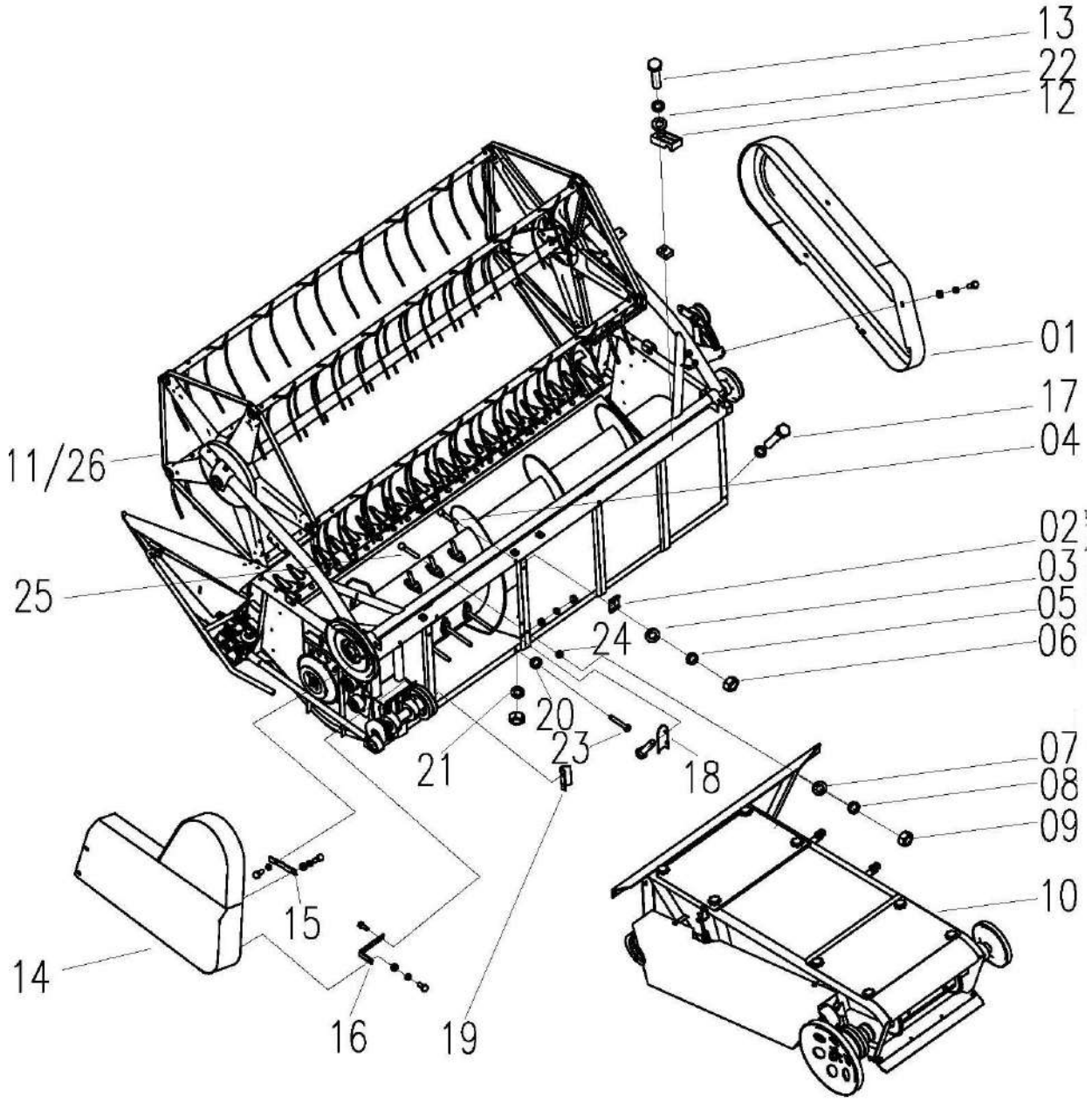

Header and Conveyor W3.5HC-01-00				
No.	**Description**	**Qty**	**Part Code**	**Remark**
01	Right Cover, Header	1	W2.0-01-06A-00	
02	Plate (2)	12	W2.5E-01B-26	
03	Gasket (1)	4	W2.5E-01B-25	
04	Bolt M10×95	6	GB/T5782	
05	Washer 10	10	GB/T93	
06	Nut M10	10	GB/T6170	
07	Washer 8	14	GB/T96	
08	Washer 8	25	GB/T93	
09	Nut M8	12	GB/T6170	
10	Conveyor Assy	1	W3.5H-01-02-00	
11	Header Assy (2.2m)	1	W3.5HC-01-01-00	
12	Pipe Clamp	8	W2.5E-01B-28	
13	Bolt M8×20	15	GB/T5783	
14	Left Cover, Header	1	W2.0-01-03-00	
15	Rear Frame, Cover	1	W2.0-01-07-00	
16	Rear Frame, Cover	1	W2.5E-01M-10	
17	Bolt M8×45	4	GB/T5783	
18	Feeding Plate, Right	1	W3.5-01A-12	
19	Feeding Plate, Left	1	W3.5-01A-11	
20	Bolt M10×75	4	GB/T5782	
21	Washer 10	4	GB/T97.1	
22	Plate	2	W2.5Y-01MC-10	
23	Washer 10	1	GB/T96	
24	Plate	4	W2.5-02-56-26	
25	Bolt M8×55	4	GB/T12	
26	Header Assy (2.36m)	1	W3.5HC-01D-01-00	The optional

Header Assy（2.2 m）W3.5HC-01-01-00

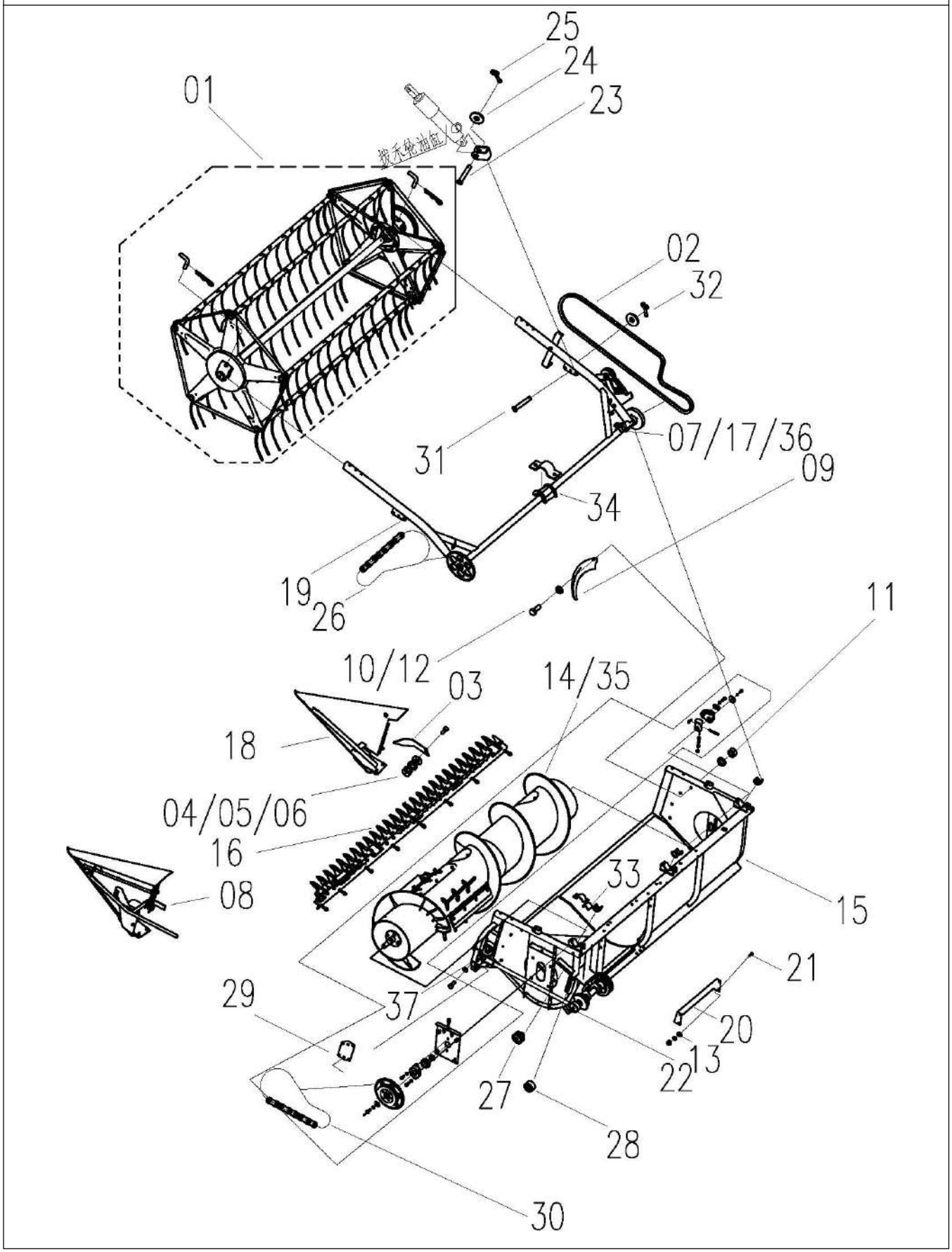

Header Assy（2.2 m）W3.5HC-01-01-00				
No.	**Description**	**Qty**	**Part Code**	**Remark**
01	Reel Assy	1	W2.5E-01HC-01-05-00	
02	Reel Belt	1	W2.5E-01XCP-01-18	
03	Small Cover	1	W2.5E-01M-01-09	
04	Bolt M8×20	4	GB/T5783	
05	Nut M8	8	GB/T6170	
06	Washer 8	12	GB/T93	
07	Washer 8	18	GB/T97.1	
08	Left Divider Assy	1	W3.5H-01-01-08-00	
09	Anti-straw Plate, Auger	2	L20.1-05	
10	Bolt M6×16	8	GB/T5783	
11	Nut M6	8	GB/T6170	
12	Washer 6	8	GB/T93	
13	Washer 6	8	GB/T97.1	
14	Auger Assy, Header	1	W2.5E-01D-01-02C-00	
15	Frame Assy, Header	1	W3.5-01A-01D-01-00	
16	Cutter Assy	1	W2.5E-01H-01-03-00	
17	Press Plate	4	W2.5E-01B-01-20A	
18	Right Divider Assy	1	W3.5H-01-01-06-00	
19	Transmission Assy, Reel	1	W2.5E-01DC-01-04A-00	
20	Baffle Weld	1	W2.5E-01B-01-50-00	
21	Bolt M6×18	3	GB/T5783	
22	Cutter Driven Assy	1	W3.5-01A-01-07-00	
23	Pin Shaft B12×40	2	GB/T882	
24	Washer 12	4	GB/T97.1	
25	Pin 3.2×28	4	GB/T91	
26	Chain 08b-1×114	1	GB/T1243.1	
27	Tension Pulley Assy	1	W2.5E-01B-01-15-00	
28	Tension Pulley Assy	1	W2.5E-01B-01-11-00	
29	Chain 08b-1×98	1	GB/T1243.1	
30	Connecting Plate Weld	1	W2.0-01-01-12-00	
31	Pin Shaft B10×48	2	GB/T882	
32	Washer 10	2	GB/T97.1	
33	Nylon Sleeve A	4	W2.5E-01B-01-21	
34	Nylon Sleeve B	4	W2.5E-01B-01-22	
35	Auger Assy, Header	1	W3.5H-01-01-02-00	Optional (diameter Φ350)
36	Bolt M8×25	8	GB/T5783	
37	Frame Assy	1	W2.5Y-01T-01-12-00	

Header Assy（2.36m）W3.5HC-01D-01-00

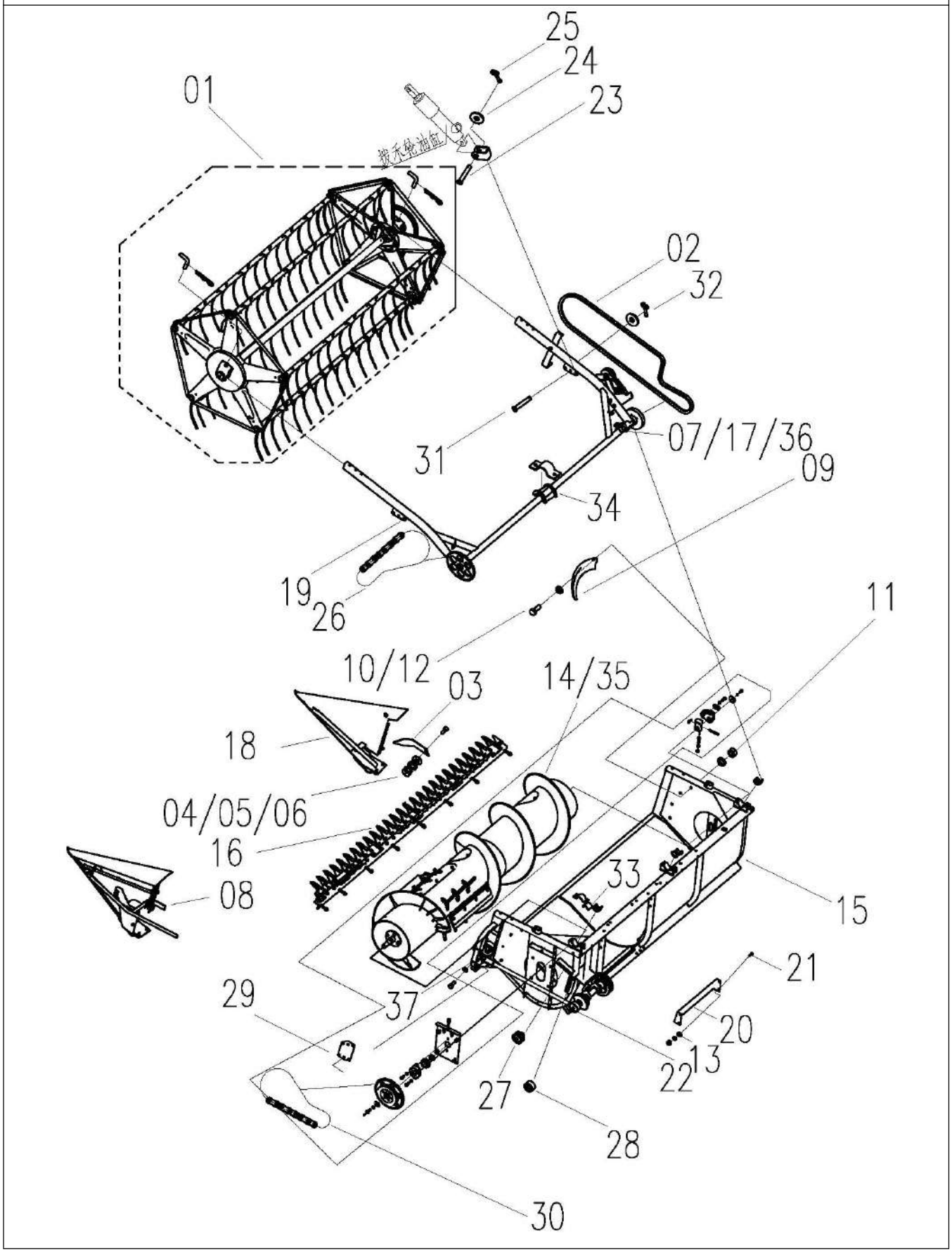

Header Assy（2.36m）W3.5HC-01D-01-00				
No.	**Description**	**Qty**	**Part Code**	**Remark**
01	Reel Assy	1	W3.5D-01DC-01-05-00	
02	Reel Belt	1	W2.5E-01XCP-01-18	
03	Small Cover	1	W2.5E-01M-01-09	
04	Bolt M8×20	4	GB/T5783-86	
05	Nut M8	8	GB/T6170-86	
06	Washer 8	12	GB/T93-87	
07	Washer 8	20	GB/T97.1-85	
08	Left Divider Assy	1	W3.5H-01-01-08-00	
09	Anti-straw Plate, Auger	2	L20.1-05	
10	Bolt M6×16	8	GB/T5783-86	
11	Nut M6	8	GB/T6170-86	
12	Washer 6	8	GB/T93-87	
13	Washer 6	8	GB/T97.1-85	
14	Auger Assy, Header	1	W3.5D-01D-01-02A-00	
15	Frame Assy, Header	1	W3.5D-01D-01-01C-00	
16	Cutter Assy	1	W3.5D-01D-01-03-00	
17	Press Plate	4	W2.5E-01B-01-20A	
18	Right Divider Assy	1	W3.5H-01-01-06-00	
19	Transmission Assy, Reel	1	W3.5-01CAC-01-04A-00	
20	Baffle Weld	1	W2.5E-01B-01-50-00	
21	Bolt M6×18	3	GB/T5783-86	
22	Cutter Driven Assy	1	W3.5D-01D-01-07-00	
23	Pin Shaft B12×40	2	GB/T882-86	
24	Washer 12	4	GB/T97.1-85	
25	Pin 3.2×28	4	GB/T91-86	
26	Chain 08b-1×118	1	GB/T1243.1-83	
27	Tension Pulley Assy	1	W2.5E-01B-01-15-00	
28	Tension Pulley Assy	1	W2.5E-01B-01-11-00	
29	Chain 08b-1×100	1	GB/T1243.1-83	
30	Connecting Plate Weld	1	W2.0-01-01-12-00	
31	Pin Shaft B10×48	2	GB/T882-86	
32	Washer 10	2	GB/T97.1-85	
33	Nylon Sleeve A	4	W2.5E-01B-01-21	
34	Nylon Sleeve B	4	W2.5E-01B-01-22	
35	Adjustment Gasket	On demand	W2.5E-01B-01-23	
36	Bolt M8×25	8	GB/T5783-86	
37	Frame Assy	1	W2.5Y-01T-01-12-00	

Reel Assy（2.2m）W2.5E-01HC-01-05-00

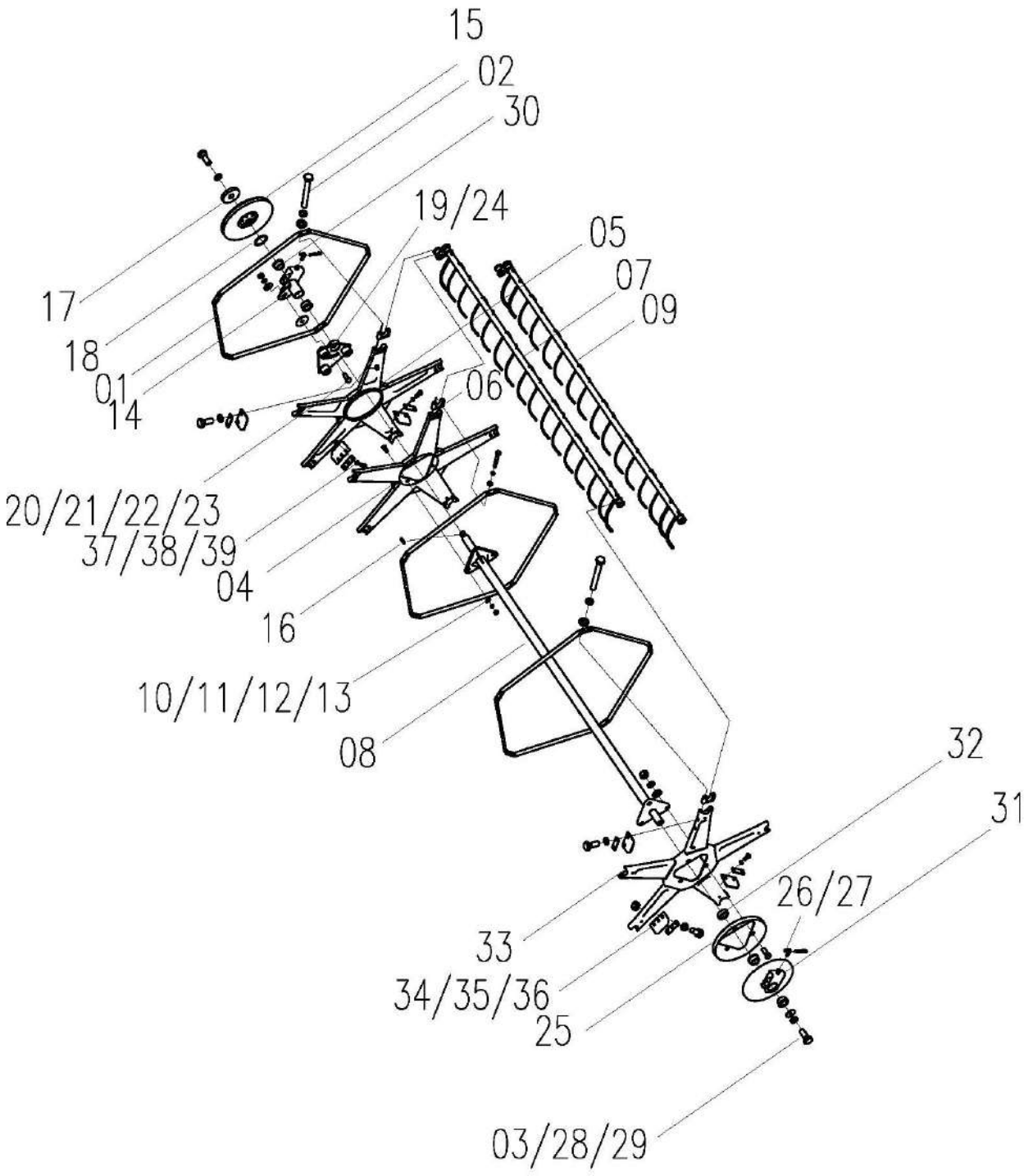

Reel Assy（2.2m）W2.5E-01HC-01-05-00				
No.	**Description**	**Qty**	**Part Code**	**Remark**
01	Stiffened Plate	15	W2.5E-01M-01-05-10	
02	Bolt M8×70	30	GB/T5783-86	
03	Washer 8	30	GB/T93-87	
04	Eccentric Plate Weld	1	W2.5E-01M-01-05-02-00	
05	Plate Weld	1	W2.5E-01M-01-05-01-00	
06	Nylon Seat	15	W2.0B-01B-01-05Q-13	
07	Reel Bar Assy (Ⅰ)	2	W2.0B-01B-01-05Q-06-00	Optional (7 paired with 9)
08	Shaft Weld, Middle	1	W2.0B-01B-01-05D-17-00	
09	Reel Bar Assy (Ⅱ)	3	W2.0B-01B-01-05Q-15-00	Optional (7 paired with 9)
10	Bolt M12×30	6	GB/T5783-86	
11	Washer 12	6	GB/T97.1-85	
12	Washer 12	6	GB/T93-87	
13	Nut M12	6	GB/T6170-86	
14	Shaft Seat Assy, Right	1	W2.0B-01B-01-05Q-03-00	
15	Belt Pulley Weld, Reel	1	W2.5E-01XCP-01-05-03-00	
16	Key C8×32	1	GB/T1096-79	
17	Retaining Ring for Shaft	1	L1.8A-01-23-13	
18	Retaining Ring	1	W2.0B-01B-01-05Q-16	
19	Eccentric Plate, Adjusting	1	W2.0B-01B-01-05Q-11-00	
20	Bolt M10×30	1	GB/T12-88	
21	Big Washer 10	1	GB/T96-85	
22	Washer 10	1	GB/T93-87	
23	Nut M10	1	GB/T6170-86	
24	Eccentric Roller Assy	3	W2.0B-01B-01-05Q-12-00	
25	Anti-Straw Plate	1	W2.0B-01B-01-05-08	
26	Hook	2	W.1.2-10	
27	Spring Pin	2	W.1.2-11	
28	Bolt M8×20	2	GB/T5783-86	
29	Retaining Ring	1	WD.1FG.39-06	
30	Sleeve, Wear Protection	4	W.1.2-12	
31	Shaft Seat Weld, Left	1	W2.0B-01B-01-05Q-07-00	
32	Sleeve	1	W2.0B-01B-01-05Q-25	
33	Plate weld, Left	1	W2.5E-01M-01-05-14-00	
34	Plate, Anti-straw	6	W2.0B-01B-01-05Q-19	
35	Press Plate	6	W2.0B-01B-01-05Q-20	
36	Plate B, Anti-straw	6	W2.0B-01B-01-05Q-21	Spare parts box
37	Gasket 8	30	GB/T97.1-85	
38	Bolt M6×25	18	GB/T5783-86	
39	Nut M6	12	GB/T6170-86	

Reel Assy（2.2m）W2.5E-01HC-01-05-00

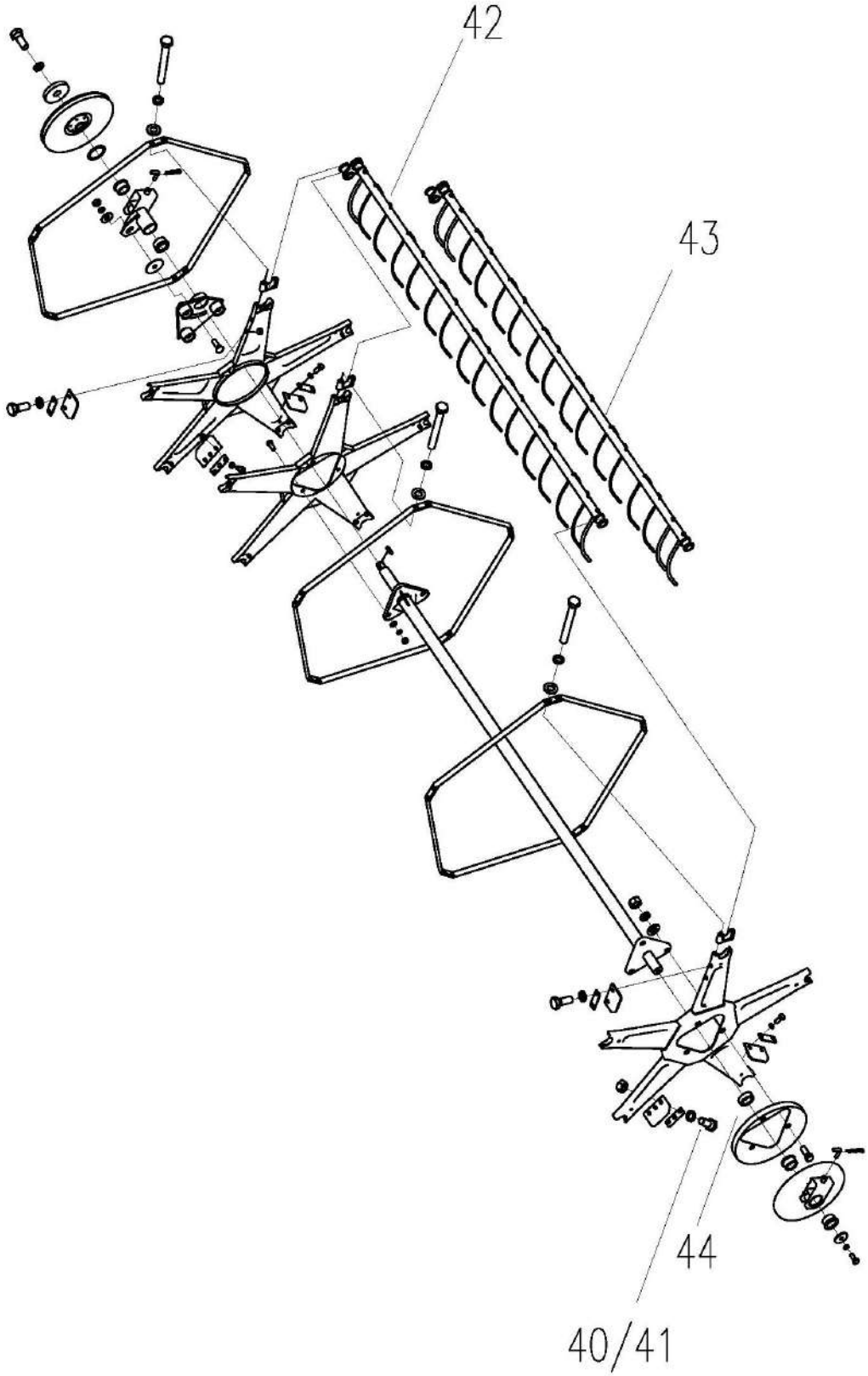

Reel Assy（2.2m）W2.5E-01HC-01-05-00				
No.	**Description**	**Qty**	**Part Code**	**Remark**
40	Washer 6	18	GB/T96-85	
41	Washer 6	18	GB/T93-87	
42	Reel Bar Assy 1	2	W2.5E-01H-01-05-06-00	42 and 43 matching use
43	Reel Bar Assy 2	3	W2.5E-01H-01-05-15-00	42 and 43 matching use
44	Washer 12	6	GB/T96-85	

Reel Assy（2.36m）W3.5D-01DC-01-05-00

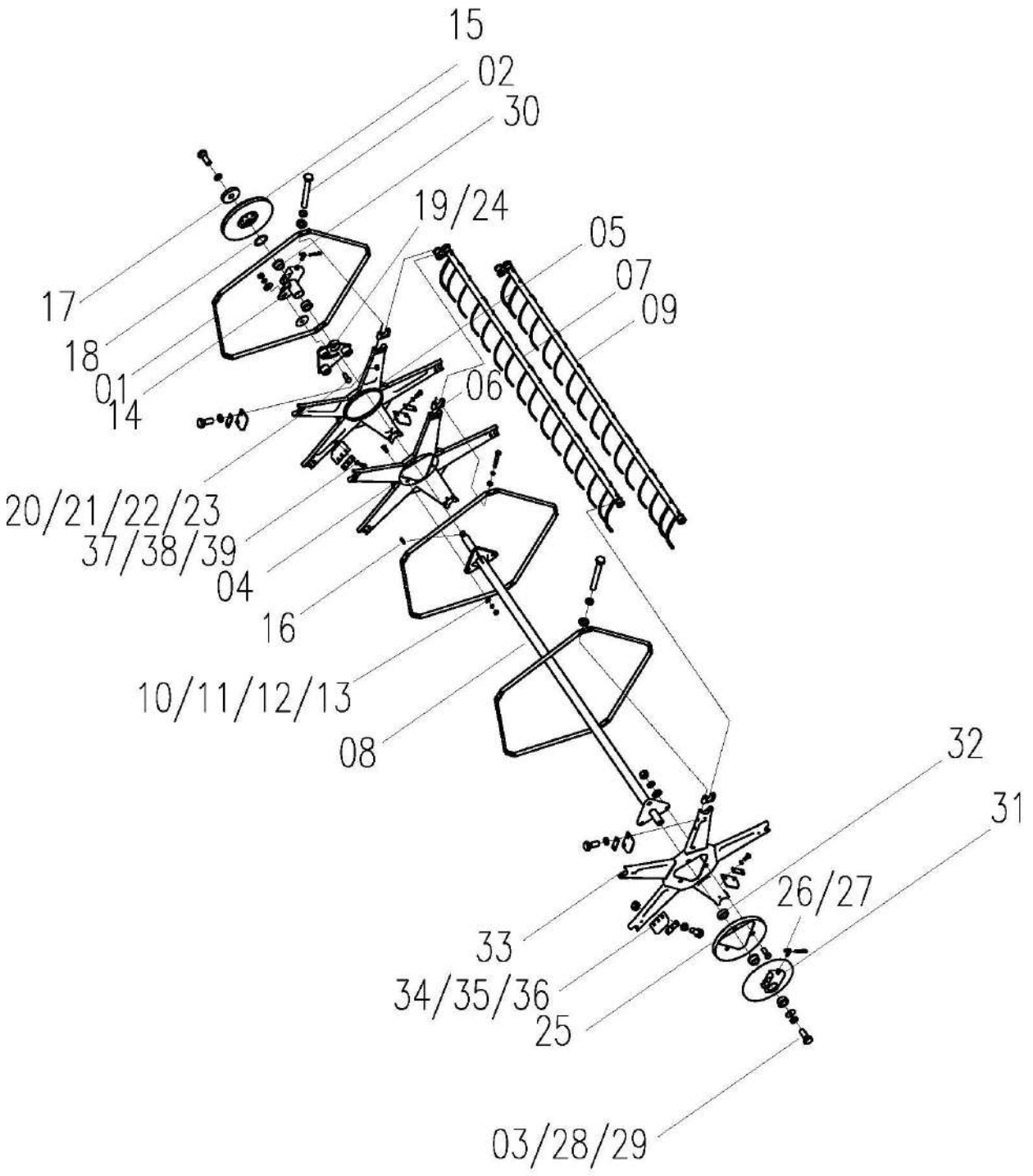

Reel Assy（2.36m）W3.5D-01DC-01-05-00				
No.	**Description**	**Qty**	**Part Code**	**Remark**
01	Stiffened Plate	15	W2.5E-01M-01-05-10	
02	Bolt M8×70	30	GB/T5783-86	
03	Washer 8	30	GB/T93-87	
04	Eccentric Plate Weld	1	W2.5E-01M-01-05-02-00	
05	Plate Weld	1	W2.5E-01M-01-05-01-00	
06	Nylon Seat	15	W2.0B-01B-01-05Q-13	
07	Reel Bar Assy (Ⅰ)	2	W3.5D-01D-01-05-06-00	
08	Shaft Weld, Middle	1	W3.5D-01D-01-05-17-00	
09	Reel Bar Assy (Ⅱ)	3	W3.5D-01D-01-05-15-00	
10	Bolt M12×30	6	GB/T5783-86	
11	Washer 12	6	GB/T97.1-85	
12	Washer 12	6	GB/T93-87	
13	Nut M12	6	GB/T6170-86	
14	Shaft Seat Assy, Right	1	W2.0B-01B-01-05Q-03-00	
15	Belt Pulley Weld, Reel	1	W2.5E-01XCP-01-05-03-00	
16	Key C8×32	1	GB/T1096-79	
17	Retaining Ring for Shaft	1	L1.8A-01-23-13	
18	Retaining Ring	1	W2.0B-01B-01-05Q-16	
19	Eccentric Plate, Adjusting	1	W2.0B-01B-01-05Q-11-00	
20	Bolt M10×30	1	GB/T12-88	
21	Big Washer 10	1	GB/T96-85	
22	Washer 10	1	GB/T93-87	
23	Nut M10	1	GB/T6170-86	
24	Eccentric Roller Assy	3	W2.0B-01B-01-05Q-12-00	
25	Anti-Straw Plate	1	W2.0B-01B-01-05-08	
26	Hook	2	W.1.2-10	
27	Spring Pin	2	W.1.2-11	
28	Bolt M8×20	2	GB/T5783-86	
29	Retaining Ring	1	WD.1FG..39-06	
30	Sleeve, Wear Protection	4	W.1.2-12	
31	Shaft Seat Weld, Left	1	W2.0B-01B-01-05Q-07-00	
32	Sleeve	1	W2.0B-01B-01-05Q-25	
33	Plate weld, Left	1	W2.5E-01M-01-05-14-00	
34	Plate, Anti-straw	6	W2.0B-01B-01-05Q-19	
35	Press Plate	6	W2.0B-01B-01-05Q-20	
36	Plate B, Anti-straw	6	W2.0B-01B-01-05Q-21	
37	Gasket 8	30	GB/T97.1-85	
38	Bolt M6×25	18	GB/T5783-86	
39	Nut M6	12	GB/T6170-86	

Reel Assy（2.36m）W3.5D-01DC-01-05-00

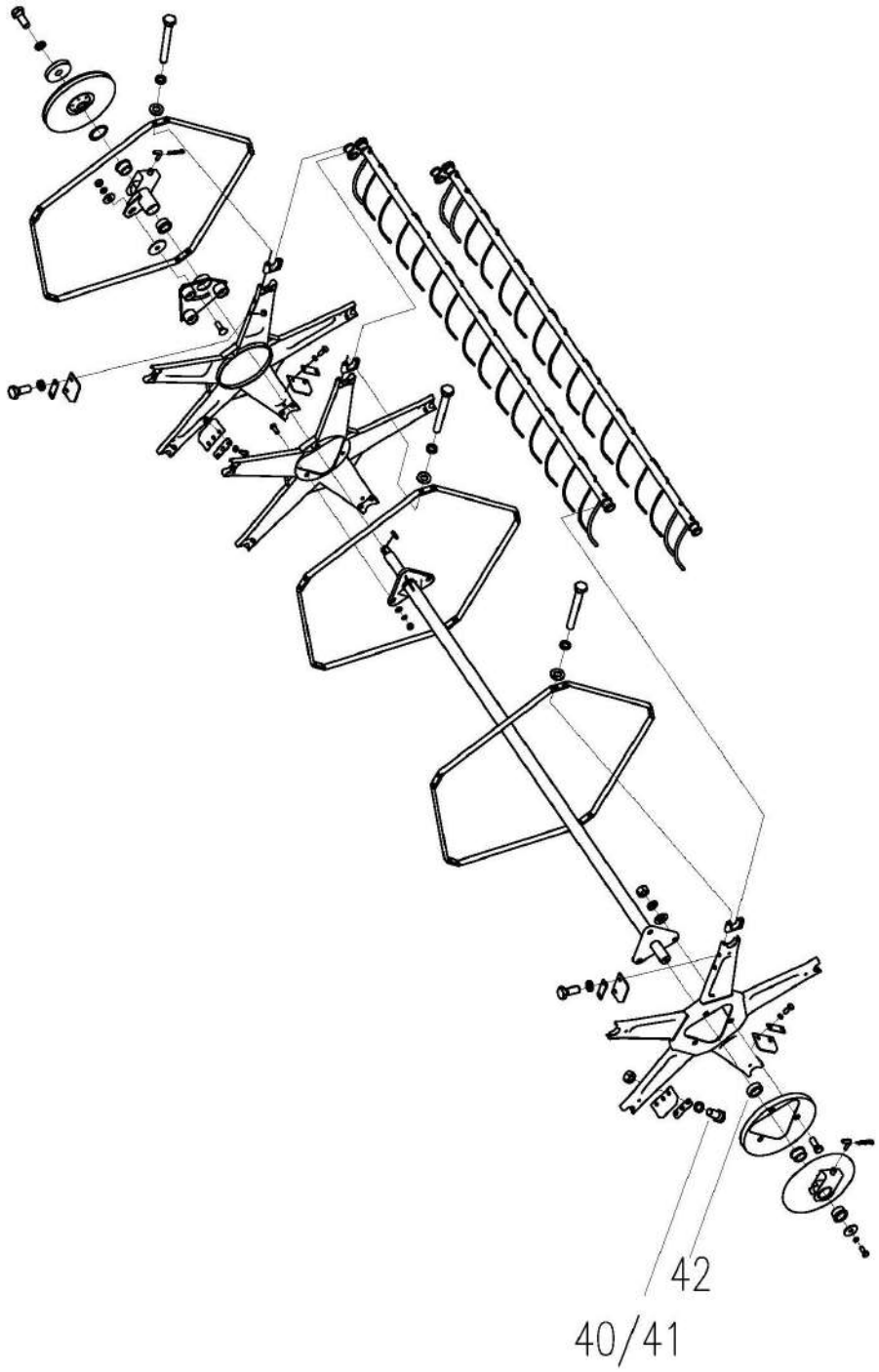

No.	Description	Qty	Part Code	Remark
40	Washer 6	18	GB/T96-85	
41	Washer 6	18	GB/T93-87	
42	Washer 12	6	GB/T96-85	

Reel Bar Assy（2.2m Header optional 1）

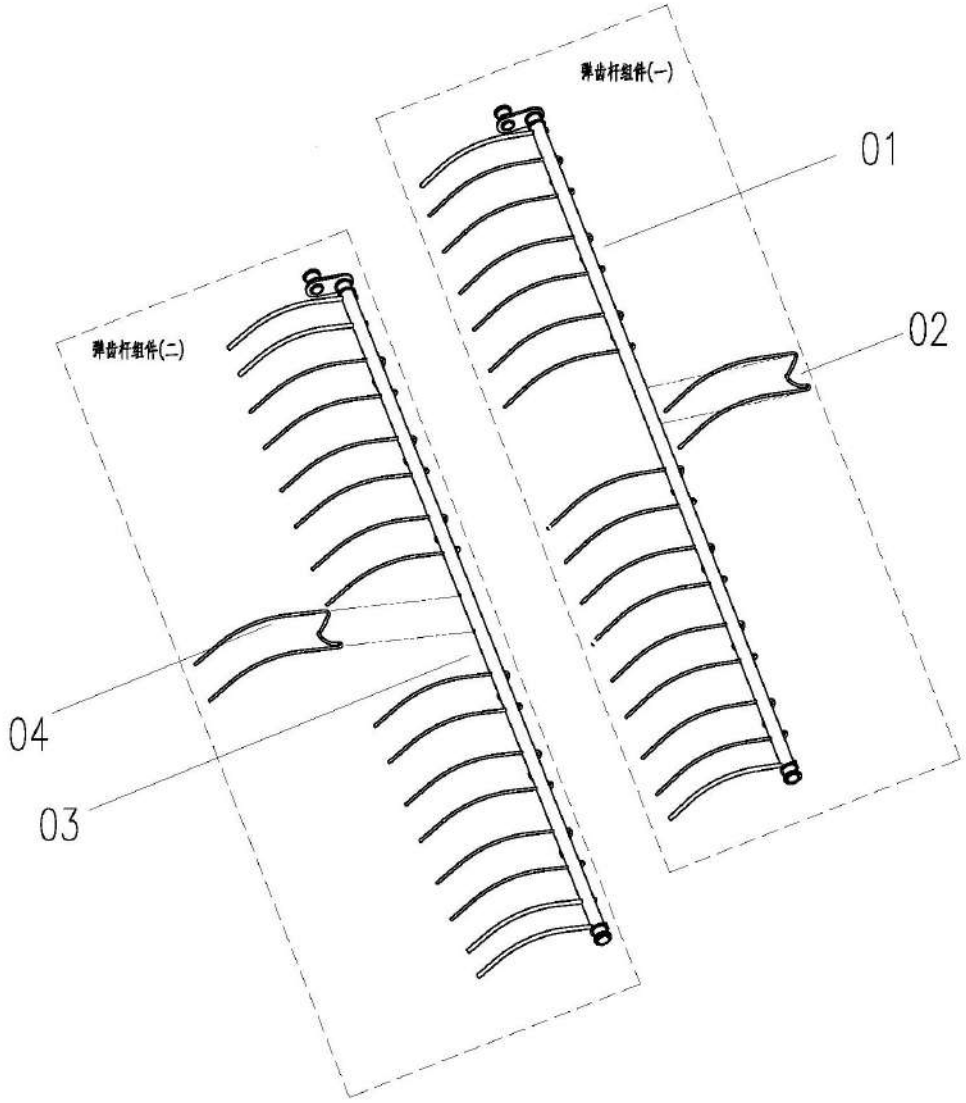

No.	Description	Qty	Part Code	Remark
1	Reel Bar weld (1)	1	W2.0B-01B-01-05Q-06-01-00	
2	Spring Tooth	8	WD.1E.2.2-01	
3	Reel Bar Weld (2)	1	W2.0B-01B-01-05Q-15-01-00	
4	Spring Tooth	7	WD.1E.2.2-01	

Reel Bar Assy（Rui Long 2.2m Header Optional 2）

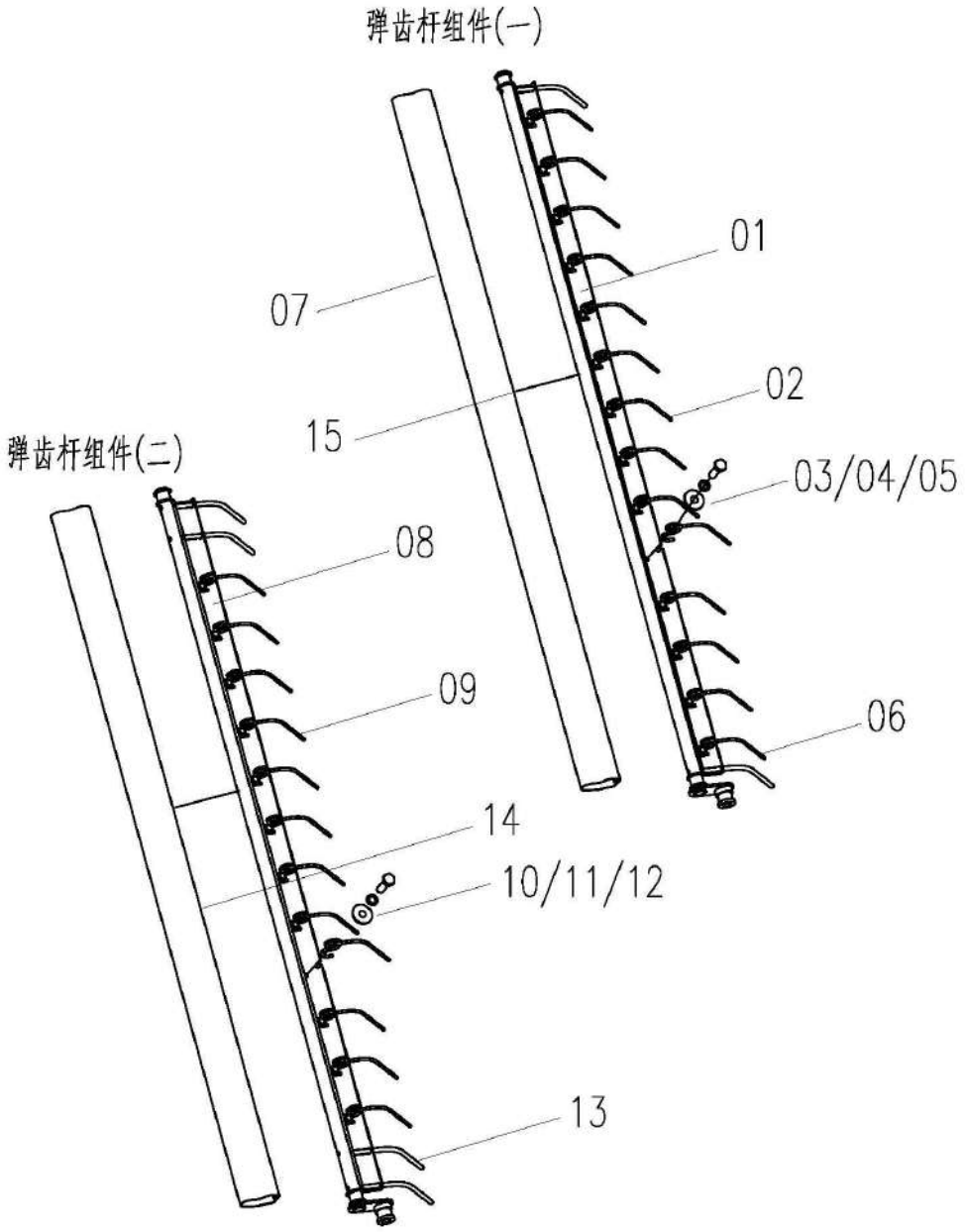

Reel Bar Assy（Rui Long 2.2m Header Optional 2）				
No.	**Description**	**Qty**	**Part Code**	**Remark**
01	Reel Bar weld (1)	1	W2.5E-01H-01-05-06B-01-00	
02	Reel Spring Teeth (Left-Handed)	15	W2.5E-01M-01-05-06-02	
03	Bolt M8×20	17	GB/T5783-86	
04	Washer 8	17	GB/T96-85	
05	Cushion 8	17	GB/T93-87	
06	Reel Spring Teeth (right-handed)	2	W2.5E-01M-01-05-06-03	
07	Anti-Straw Housing (Ⅰ)	1	W2.5E-01H-01-05-06B-04	The optional
08	Reel Bar Weld (Ⅱ)	1	W2.5E-01H-01-05-15B-01-00	
09	Reel Spring Teeth (left-handed)	15	W2.5E-01M-01-05-06-02	
10	Bolt M8×20	18	GB/T5783-86	
11	Gasket 8	18	GB/T96-85	
12	Cushion 8	18	GB/T93-87	
13	Reel Spring Teeth (right-handed)	3	W2.5E-01M-01-05-06-03	
14	Anti-Straw Housing (Ⅱ)	1	W2.5E-01H-01-05-15B-04	The optional
15	Tie (black nylon)	6		Matches with 7，14

Reel Bar Assy（2.36m）

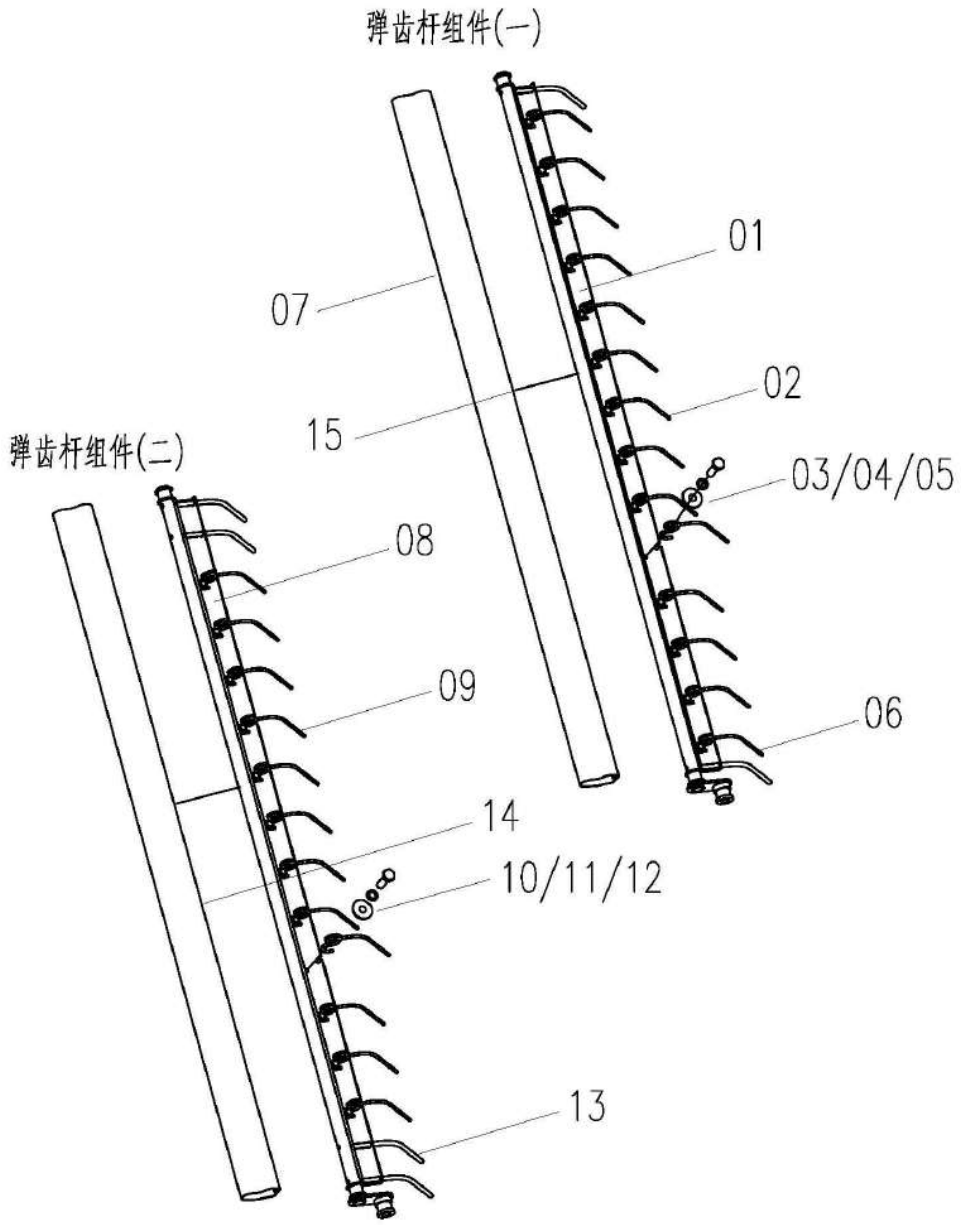

Reel Bar Assy（2.36m）				
No.	**Description**	**Qty**	**Part Code**	**Remark**
01	Reel Bar weld (1)	1	W3.5D-01D-01-05-06A-01-00	
02	Reel Spring Teeth (Left-Handed)	16	W2.5E-01M-01-05-06-02	
03	Bolt M8×20	18	GB/T5783-86	
04	Washer 8	18	GB/T96-85	
05	Cushion 8	18	GB/T93-87	
06	Reel Spring Teeth (right-handed)	2	W2.5E-01M-01-05-06-03	
07	Anti-Straw Housing (Ⅰ)	1	W3.5D-01D-01-05-06A-04	
08	Reel Bar Weld (Ⅱ)	1	W3.5D-01D-01-05-15A-01-00	
09	Reel Spring Teeth (left-handed)	16	W2.5E-01M-01-05-06-02	
10	Bolt M8×20	19	GB/T5783-86	
11	Gasket 8	19	GB/T96-85	
12	Cushion 8	19	GB/T93-87	
13	Reel Spring Teeth (right-handed)	3	W2.5E-01M-01-05-06-03	
14	Anti-Straw Housing (Ⅱ)	1	W2.5E-01H-01-05-15A-04	
15	Tie (black nylon)	6		Matches with 7，14

Eccentric Roller Assy and Reel Pulley Assy

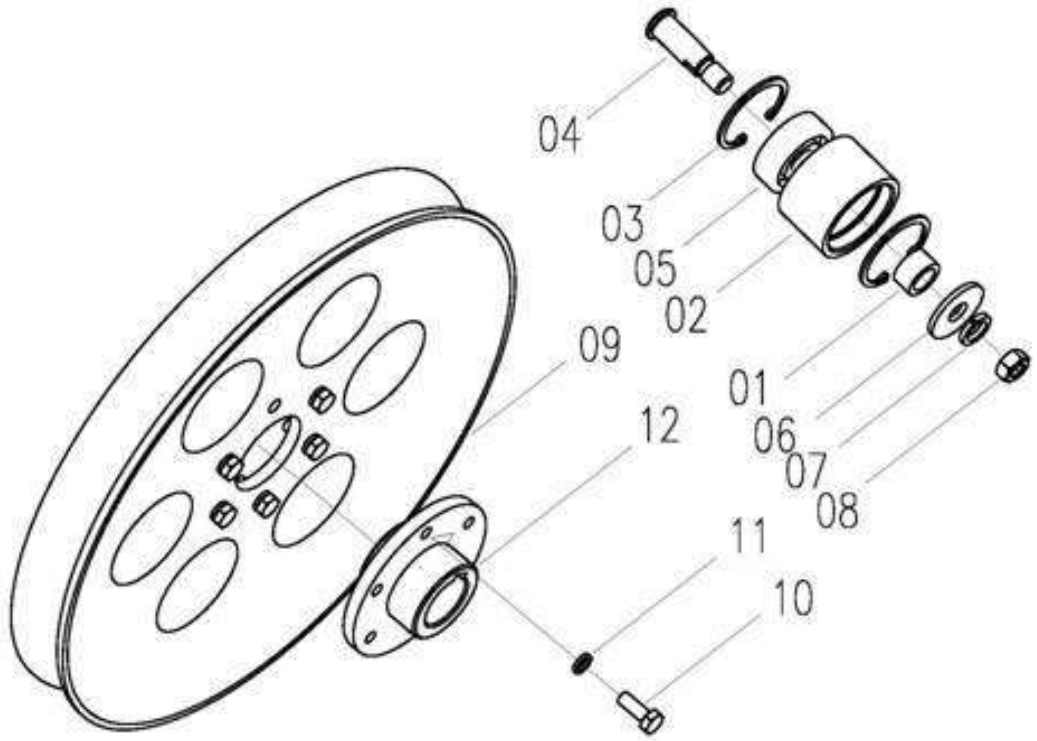

No.	Description	Qty	Part Code	Remark
01	Sleeve	1	WD.1E.2-03	
02	Roller	1	W2.0B-01B-01-05Q-12-01	
03	Retaining Ring for Hole 37	2	GB893.1-86	
04	Roller Shaft	1	WD.1E.2-02	
05	Bearing 6301-2RS	1	GB/T276-94	
06	Washer 10	1	GB/T96-85	
07	Washer 10	1	GB/T93-87	
08	Nut M10	1	GB/T6170-86	
09	Belt Pulley	1	W2.5E-01XCP-01-05-03-01	
10	Bolt M6X16	6	GB/T5783	
11	Washer 6	6	GB/T93	
12	Hub	1	W2.0-01-01-04-03-01	

Note

Header Auger Assy（2.2mφ300）W2.5E-01D-01-02C-00

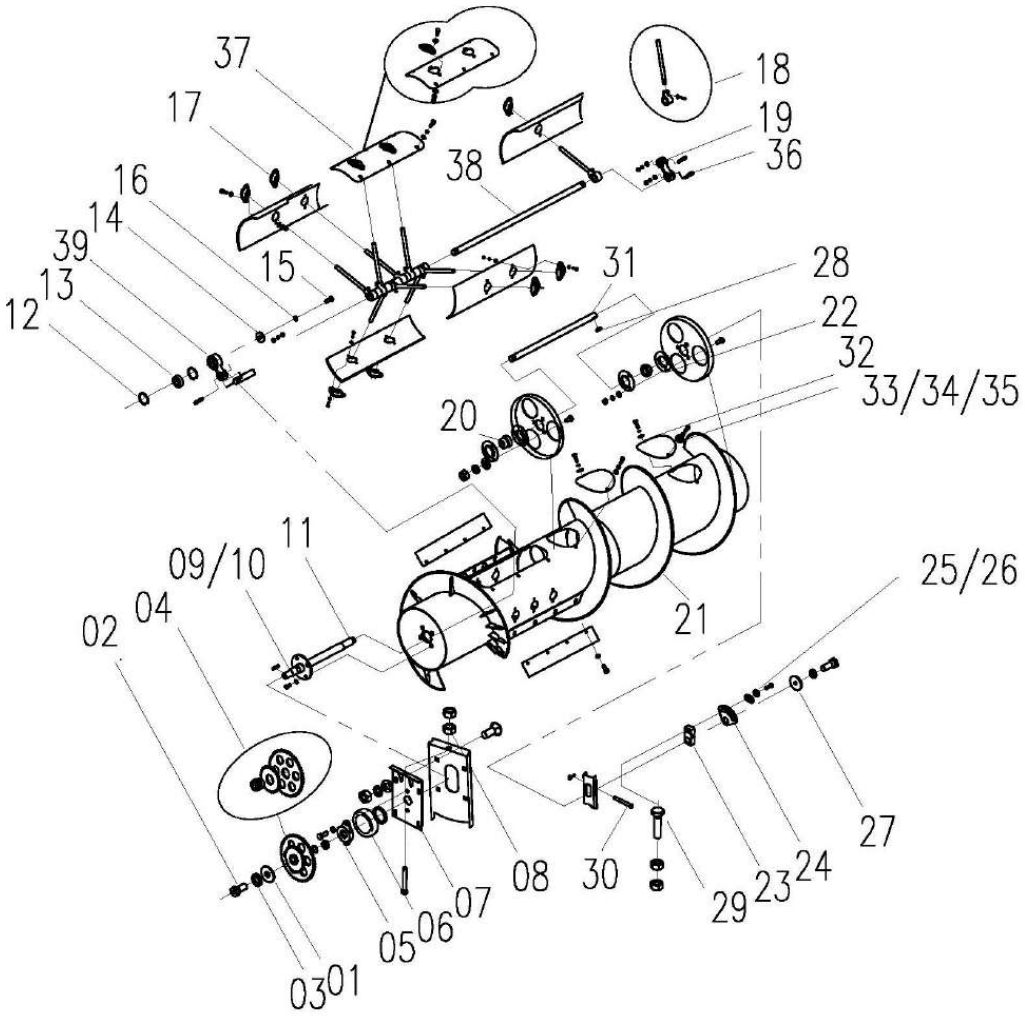

Header Auger Assy（2.2mφ300）W2.5E-01D-01-02C-00				
No.	**Description**	**Qty**	**Part Code**	**Remark**
01	Retaining Ring (2)	1	4L2.2-1.5-24	
02	Bolt M12×25	1	GB/T5783	
03	Washer 12	1	GB/T93	
04	Chain Wheel Weld	1	W2.5E-01B-01-02D-03-00	
05	Bearing Seat, Header Auger	1	W2.0-01-01-02-14	
06	Bearing 6206-2RS	1	W2.5E-01B-01-02A-16	
07	Seat Weld, Adjusting	1	W2.5E-01M-01-02-16-00	
08	Nut M10	8	GB/T6170	
09	Bolt M10×25	6	GB/T5783	
10	Washer 10	12	GB/T93	
11	Active Shaft Weld	1	W2.0B-01B-01-02-03-00	
12	Circlip for Hole, 52	2	GB/T893.1	
13	Bearing 6205-2RS	1	GB/T276	
14	Retaining Ring for Shaft	1	W2.0-02-11-08	
15	Bolt M8×20	2	GB/T5783	
16	Washer 8	19	GB/T93	
17	Guide Sleeve	10	W2.0-01-01-02A-11	
18	Telescopic Tooth Assy	13	W2.0-01-01-02A-07-00	
19	Radius Bar	1	W.1.4-06	
20	Bearing 90205	2	GB/T3882	
21	Header Auger Weld	1	W2.5E-01D-01-02B-01-00	
22	Bearing Seat CY205	4	GB/T7809	
23	Slider, Header Auger	1	WD.1.4-06	
24	Adjustable Slider	1	CL1A.4-07	
25	Press plate (1)	1	4L2.2-1.5-23	
26	Bolt M10×35	2	GB/T5783	
27	Retaining Ring	1	QT004-2009	
28	Key C8×28	1	GB/T1096	
29	Bolt M10×40	1	GB/T5783	
30	Pin	1	4L2.2-1.5-1	
31	Eccentric Adjusting Shaft	1	W2.5E-01D-01-02A-13	
32	Cover, Observe Hole	3	4LZ2.1.5-10	
33	Bolt M6×18	32	GB/T5783	
34	Washer 6	32	GB/T93	
35	Washer 6	29	GB/T97.1	
36	Pin Shaft	3	4LZ2.1.5-11	
37	Cover Assy, Observe Hole, Long	1	W2.5E-01B-01-02B-02-00	
38	Shaft, Telescopic Teeth	1	W2.5E-01B-01-02A-05	
39	Radius Bar A	1	W2.0-01-01-02-04	

Header Auger Assy（2.2mφ300）W2.5E-01D-01-02C-00

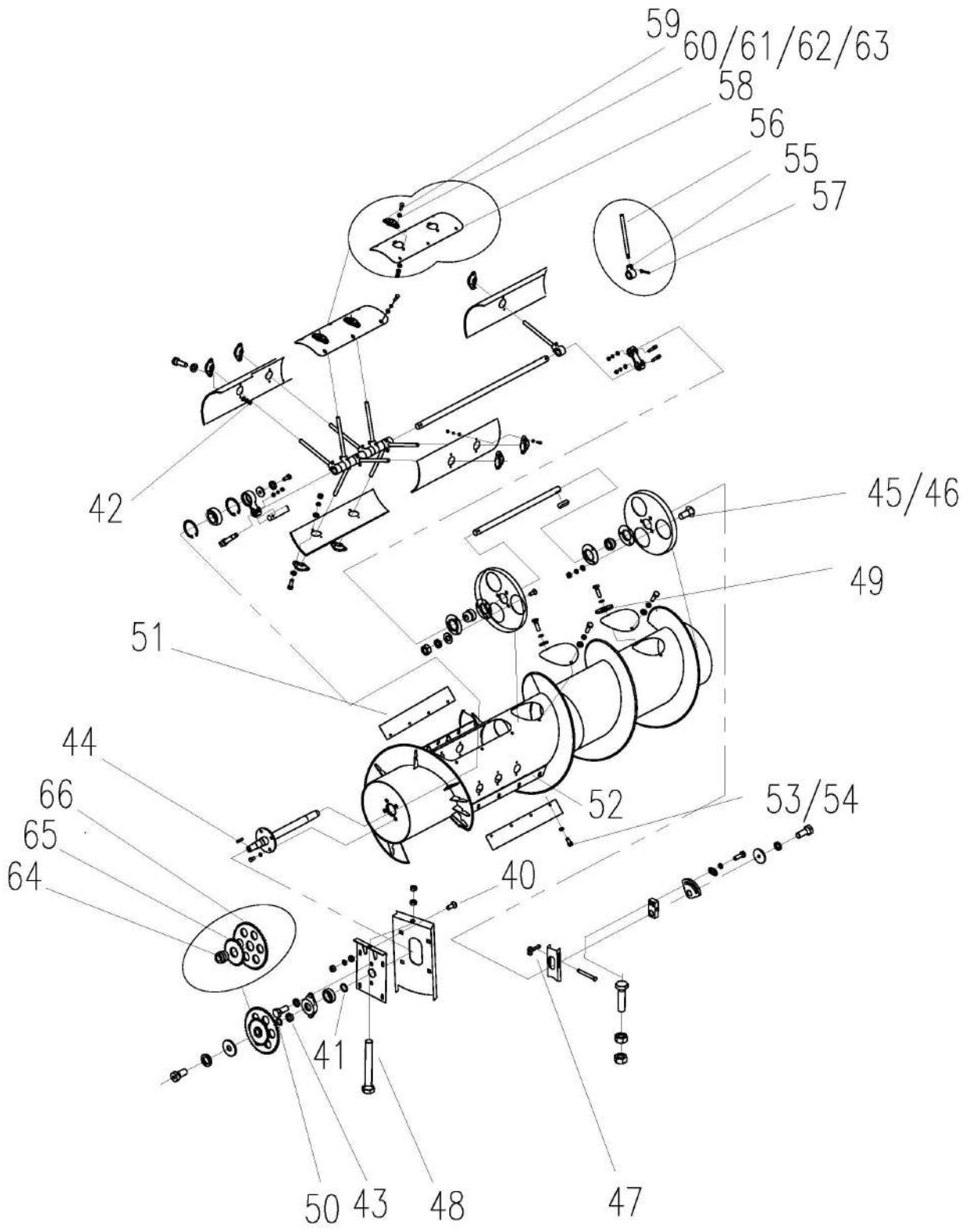

Header Auger Assy（2.2mφ300）W2.5E-01D-01-02C-00				
No.	**Description**	**Qty**	**Part Code**	**Remark**
40	Bolt M10×25	4	GB/T12	
41	Plate	1	W2.0-01-01-02-15	
42	Nut M6	20	GB/T6170	
43	Sleeve	1	W2.0-01-01-02-12	
44	Key C8×36	1	GB/T1096	
45	Bolt M8×20	6	GB/T12	
46	Nut M8	21	GB/T6170	
47	Pin 3.2×20	1	GB/T91	
48	Bolt M10×65	1	GB/T5783	
49	Washer 6	3	GB/T96	
50	Adjustment Gasket	On demand	W2.0-01-01-04G-10	
51	Toss Board	2	W2.5E-01B-01-02C-19	
52	Press Plate	2	W2.5E-01B-01-02C-21	
53	Bolt M8×25	10	GB/T5783	
54	Gasket 8	12	GB/T96	
55	Seat, Telescopic Teeth	1	W2.0-01-01-02-07-01	
56	Rod, Telescopic Teeth	1	W2.0-01-01-02A-07-02	
57	Pin 5×45	1	GB/T1220-84	
58	Cover, Observe Hole,Long	1	W2.5E-01B-01-02B-02-01	
59	Guide Sleeve, Telescopic Teeth	3	W2.0-01-01-02A-11	
60	Bolt M6×18	6	GB/T5783-86	
61	Washer 6	6	GB/T97.1-85	
62	Nut M6	6	GB/T6170-86	
63	Washer 6	6	GB/T93-87	
64	Hub	1	W2.5E-01B-01-02D-03-01	
65	Chain Wheel B	1	W2.5E-01B-01-02D-03-03	
66	Chain Wheel 52	1	W2.5E-01B-01-02D-03-02	52

Header Auger Assy（2.2mφ350）W3.5H-01-01-02-00

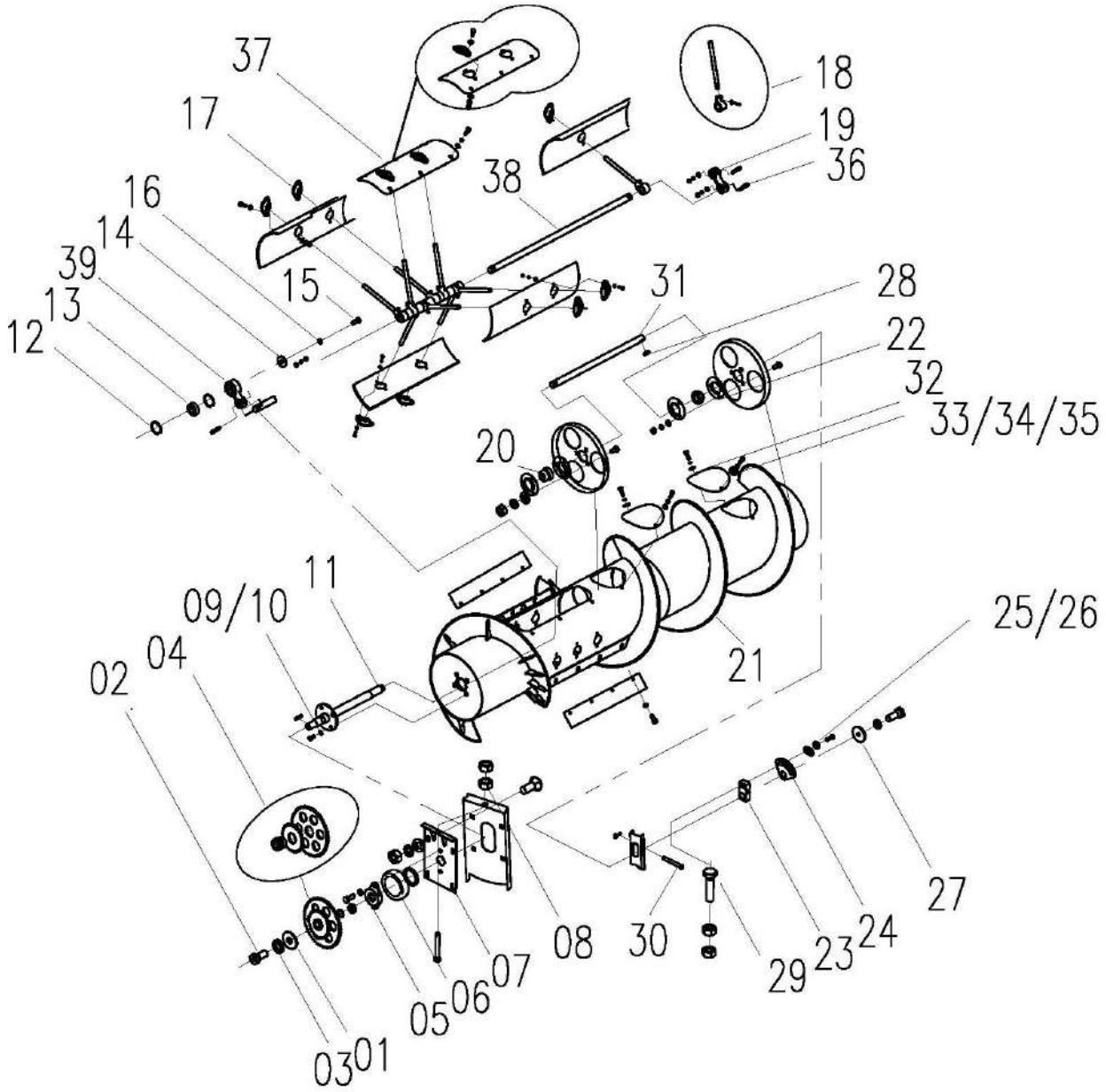

Header Auger Assy（2.2mφ350）W3.5H-01-01-02-00				
No.	**Description**	**Qty**	**Part Code**	**Remark**
01	Retaining Ring (2)	1	4L2.2-1.5-24	
02	Bolts with oil holes	1	W.1.4-03	
03	Washer 12	1	GB/T93-87	
04	Chain Wheel Weld	1	W2.5E-01B-01-02H-03-00	
05	Bearing Seat, Header Auger	1	W2.0-01-01-02-14	
06	Bearing 6206-2RS	1	W2.5E-01B-01-02A-16	
07	Seat Weld, Adjusting	1	W2.5E-01M-01-02-16-00	
08	Nut M10	13	GB/T6170-86	
09	Bolt M10×20	4	GB/T5783-86	
10	Washer 10	15	GB/T93-87	
11	Active Shaft Weld	1	W2.0B-01B-01-02-03-00	
12	Circlip for Hole, 52	2	GB/T893.1-86	
13	Bearing 6205-2RS	1	GB/T 276-94	
14	Retaining Ring for Shaft	1	W2.0-02-11-08	
15	Bolt M8×20	2	GB/T5783-86	
16	Washer 8	27	GB/T93-87	
17	Guide Sleeve	9	W2.0B-01B-01-02-11	
18	Telescopic Tooth Assy	12	W2.0B-01B-01-02-07-00	
19	Radius Bar	1	W2.0B-01B-01-02-02	
20	Bearing 90205	2	GB/T3882-87	
21	Header Auger Weld	1	W2.0B-01C-01-02-01-00	
22	Bearing Seat CY205	4	GB/T7809-87	
23	Slider, Header Auger	1	WD.1.4-06	
24	Adjustable Slider	1	CL1A.4-07	
25	Press plate (1)	1	4L2.2-1.5-23	
26	Bolt M10×35	2	GB/T5783-86	
27	Retaining Ring	1	QT004-2009	
28	Key C8×28	1	GB/T1096-79	
29	Bolt M10×40	1	GB/T5783-86	
30	Pin	1	4L2.2-1.5-1	
31	Eccentric Adjusting Shaft	1	W2.0B-01C-01-02-08	
32	Cover, Observe Hole	2	W2.0B-01B-01-02-06	
33	Bolt M6×20	32	GB/T5783-86	
34	Washer 6	32	GB/T93-87	
35	Washer 6	30	GB/T97.1-85	
36	Bolt M10×60	3	GB/T27-88	
37	Access cover assembly	1	W2.0B-01C-01-02-06-00	
38	Shaft, Telescopic Teeth	1	W2.0B-01B-01-02-05	
39	Radius Bar A	1	W2.0B-01B-01-02-04	

Header Auger Assy（2.2mφ350）W3.5H-01-01-02-00

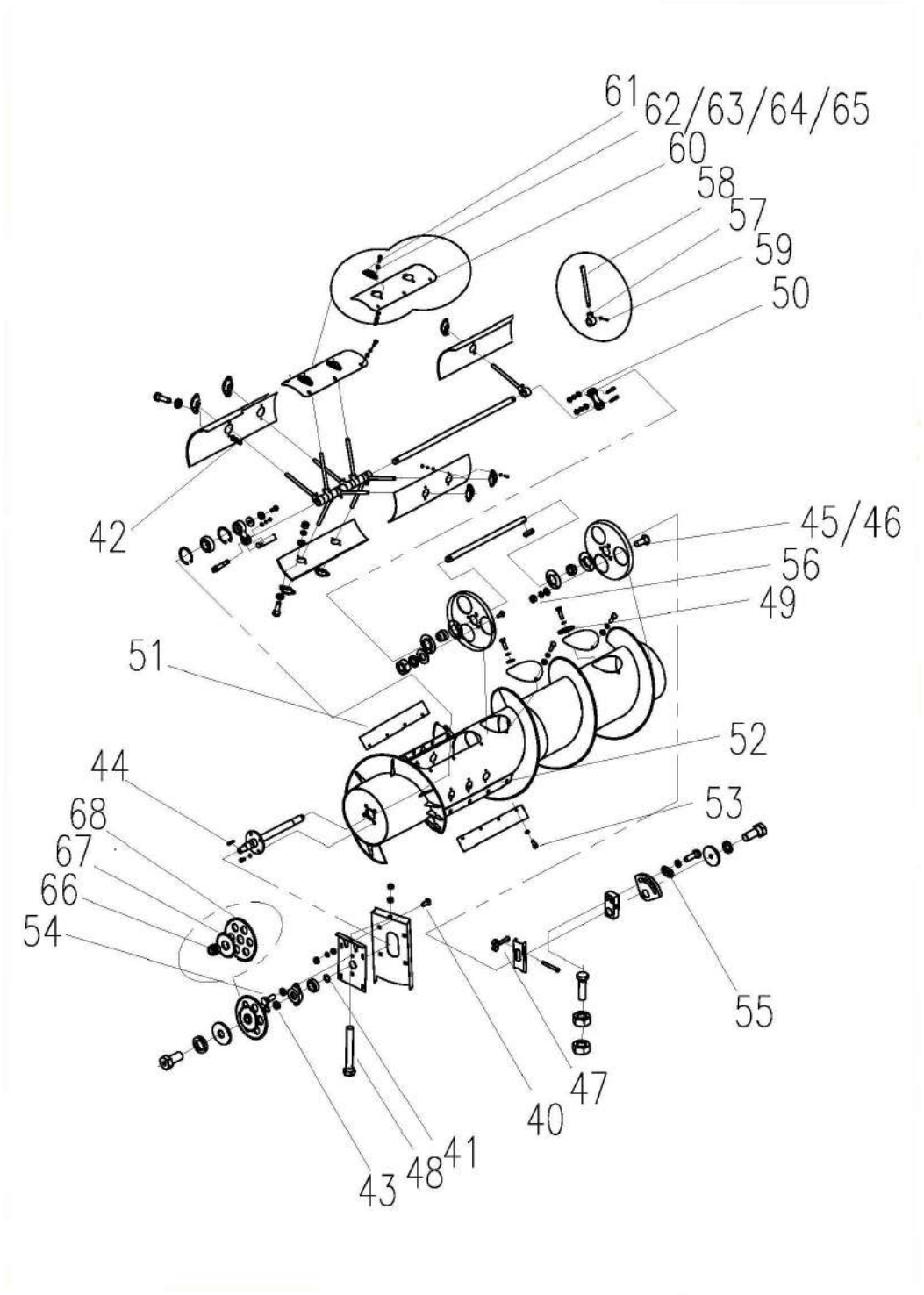

Header Auger Assy（2.2mφ350）W3.5H-01-01-02-00				
No.	**Description**	**Qty**	**Part Code**	**Remark**
40	Bolt M10×25	4	GB/T12-88	
41	Plate	1	W2.0-01-01-02-15	
42	Nut M6	20	GB/T6170-86	
43	Sleeve	1	W2.0-01-01-02-12	
44	Key C8×36	1	GB/T1096-79	
45	Bolt M8×20	6	GB/T12-88	
46	Nut M8	6	GB/T97.1-85	
47	Pin 3.2×20	1	GB/T91-86	
48	Bolt M10×65	1	GB/T5783-86	
49	Washer 6	7	GB/T96-85	
50	Washer 10	3	GB/T97.1-85	
51	Toss Board	2	W2.0B-01C-01-02-10	
52	Press Plate	2	W2.0-01-01-02A-20	
53	Bolt M8×25	8	GB/T67-85	
54	Bolt M10×25	2	GB/T5783-86	
55	Gasket	1	W2.5E-01B-01-02B-20	
56	Nut M8	17	GB/T6170-86	
57	Seat, Telescopic Teeth	12	W2.0-01-01-02-07-01	
58	Rod, Telescopic Teeth	12	W2.0B-01B-01-02-07-02	
59	Pin 5×40	12	GB/T1220-84	
60	Cover, Observe Hole, Long	1	W2.0B-01C-01-02-06-01	
61	Guide Sleeve, Telescopic，Teeth	3	W2.0B-01B-01-02-11	
62	Bolt M6×20	6	GB/T5783-86	
63	Washer 6	12	GB/T97.1-85	
64	Nut M6	6	GB/T6170-86	
65	Washer 6	6	GB/T93-87	
66	Hub	1	W2.5E-01B-01-02D-03-01	
67	Chain Wheel B	1	W2.5E-01B-01-02D-03-03	
68	Chain Wheel	1	W2.5E-01B-01-02-03A-02	（55）

Header Auger Assy（2.36m）W3.5D-01D-01-02A-00

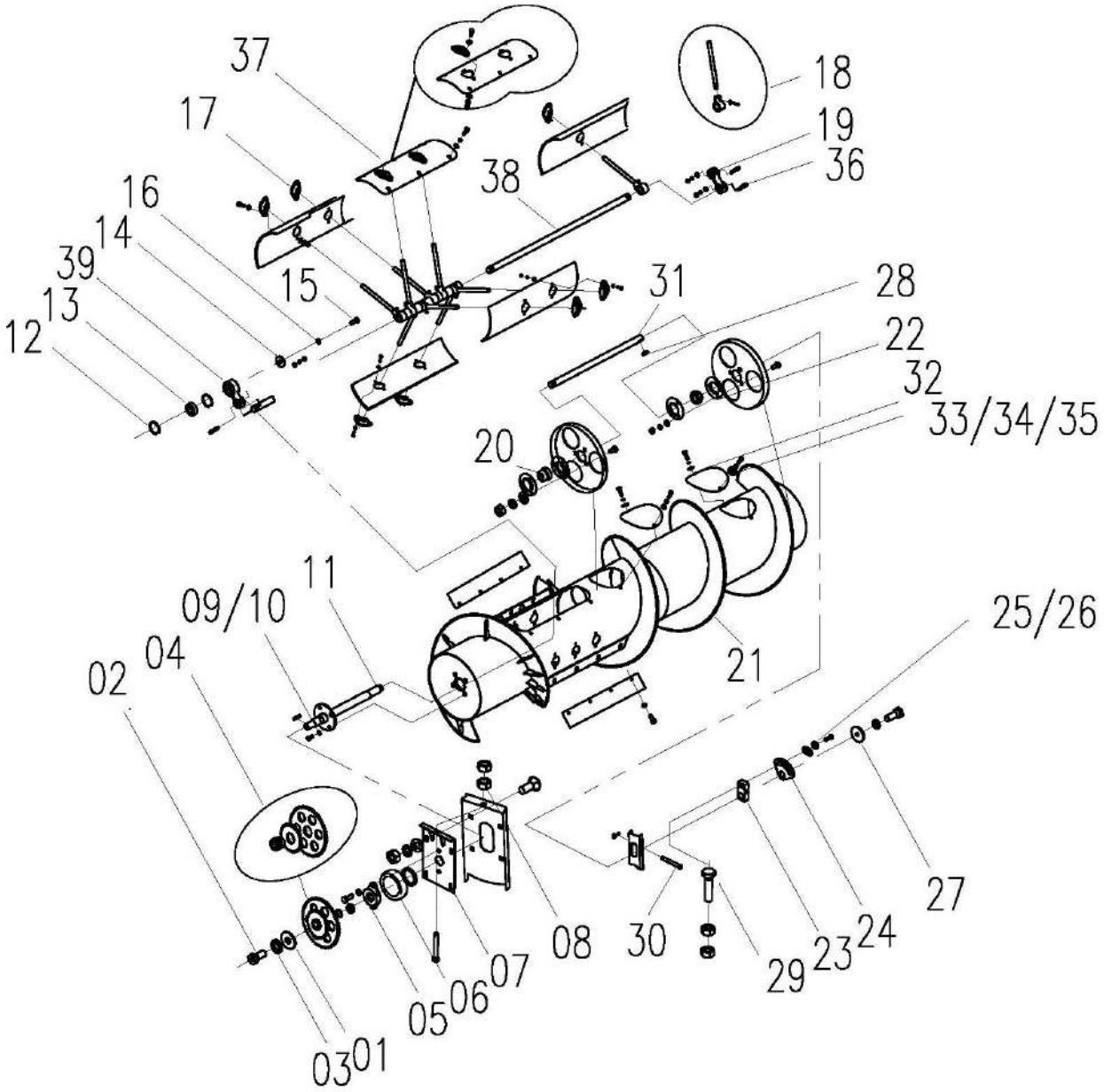

Header Auger Assy（2.36m）W3.5D-01D-01-02A-00				
No.	**Description**	**Qty**	**Part Code**	**Remark**
01	Retaining Ring (2)	1	4L2.2-1.5-24	
02	Bolt M12×25	1	GB/T5783	
03	Washer 12	1	GB/T93	
04	Chain Wheel Weld	1	W2.5E-01B-01-02D-03-00	
05	Bearing Seat, Header Auger	1	W2.0-01-01-02-14	
06	Bearing 6206-2RS	1	W2.5E-01B-01-02A-16	
07	Seat Weld, Adjusting	1	W2.5E-01M-01-02-16-00	
08	Nut M10	6	GB/T6170	
09	Bolt M10×25	6	GB/T5783	
10	Washer 10	12	GB/T93	
11	Active Shaft Weld	1	W3.5D-01D-01-02-03-00	
12	Circlip for Hole, 52	2	GB/T893.1	
13	Bearing 6205-2RS	1	GB/T276	
14	Retaining Ring for Shaft	1	W2.0-02-11-08	
15	Bolt M8×20	2	GB/T5783	
16	Washer 8	19	GB/T93	
17	Guide Sleeve	10	W2.0-01-01-02A-11	
18	Telescopic Tooth Assy	13	W2.0-01-01-02A-07-00	
19	Radius Bar	1	W.1.4-06	
20	Bearing 90205	2	GB/T3882	
21	Header Auger Weld	1	W3.5D-01D-01-02-01-00	
22	Bearing Seat CY205	4	GB/T7809	
23	Slider, Header Auger	1	WD.1.4-06	
24	Adjustable Slider	1	CL1A.4-07	
25	Press plate (1)	1	4L2.2-1.5-23	
26	Bolt M10×35	2	GB/T5783	
27	Retaining Ring	1	QT004-2009	
28	Key C8×28	1	GB/T1096	
29	Bolt M10×40	1	GB/T5783	
30	Pin	1	4L2.2-1.5-1	
31	Eccentric Adjusting Shaft	1	W3.5D-01-01-02-13	
32	Cover, Observe Hole	3	4LZ2.1.5-10	
33	Bolt M6×18	32	GB/T5783	
34	Washer 6	32	GB/T93	
35	Washer 6	29	GB/T97.1	
36	Pin Shaft	3	4LZ2.1.5-11	
37	Cover Assy, Observe Hole, Long	1	W2.5E-01B-01-02B-02-00	
38	Shaft, Telescopic Teeth	1	W2.5E-01B-01-02A-05	
39	Radius Bar A	1	W2.0-01-01-02-04	

Header Auger Assy（2.36m）W3.5D-01D-01-02A-00

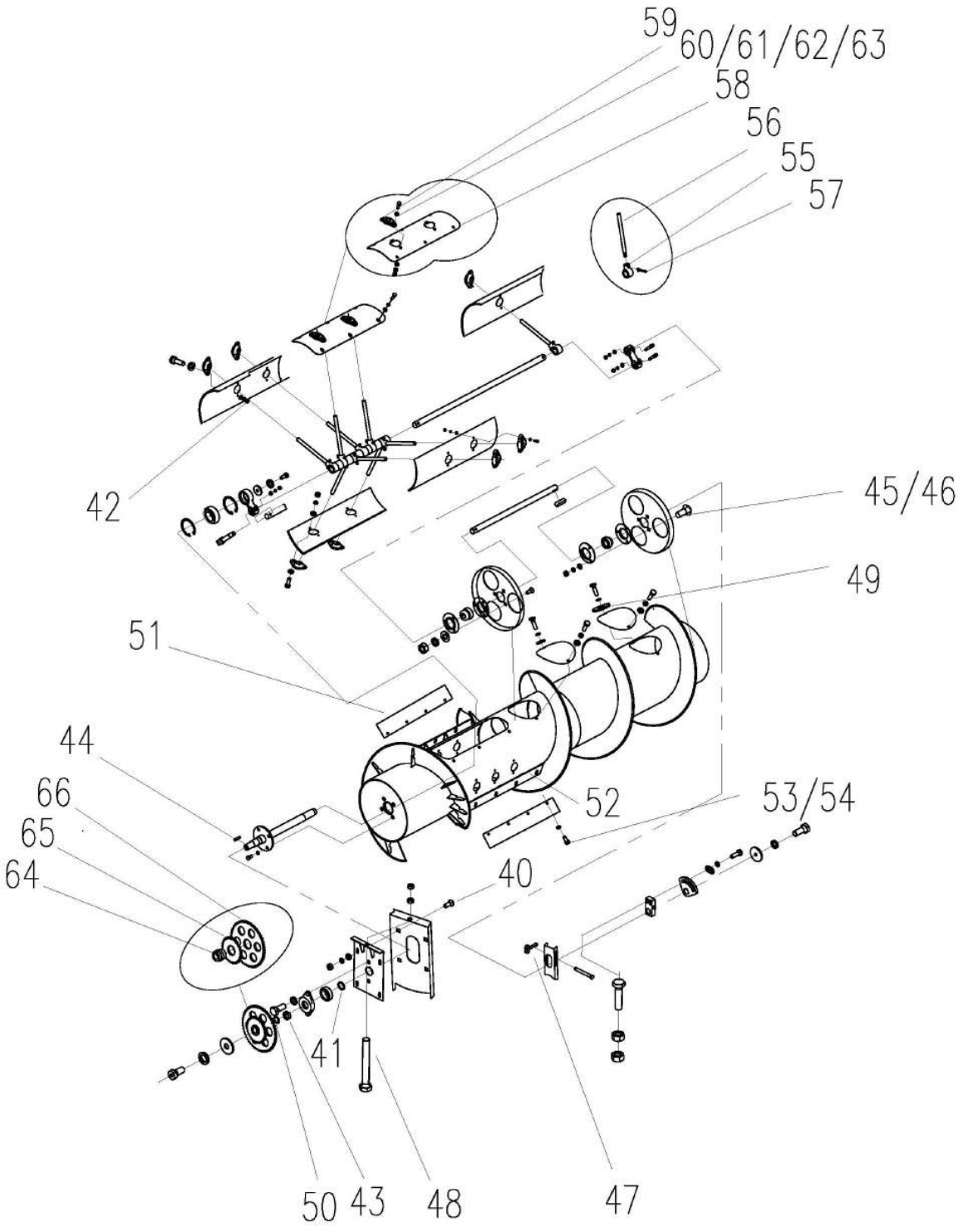

Header Auger Assy（2.36m）W3.5D-01D-01-02A-00				
No.	**Description**	**Qty**	**Part Code**	**Remark**
40	Bolt M10×25	4	GB/T12	
41	Plate	1	W2.0-01-01-02-15	
42	Nut M6	14	GB/T6170	
43	Sleeve	1	W2.0-01-01-02-12	
44	Key C8×36	1	GB/T1096	
45	Bolt M8×20	6	GB/T12	
46	Nut M8	19	GB/T6170	
47	Pin 3.2×20	1	GB/T91	
48	Bolt M10×65	1	GB/T5783	
49	Washer 6	3	GB/T96	
50	Adjustment Gasket	On demand	W2.0-01-01-04G-10	
51	Toss Board	2	W2.5E-01B-01-02C-19	Tool box
52	Press Plate	2	W2.5E-01B-01-02C-21	
53	Bolt M8×25	10	GB/T5783	
54	Gasket 8	10	GB/T96	
55	Seat, Telescopic Teeth	1	W2.0-01-01-02-07-01	
56	Rod, Telescopic Teeth	1	W2.0-01-01-02A-07-02	
57	Pin 5×45	1	GB/T1220-84	
58	Cover, Observe Hole, Long	1	W2.5E-01B-01-02B-02-01	
59	Guide Sleeve, Telescopic Teeth	3	W2.0-01-01-02A-11	
60	Bolt M6×18	6	GB/T5783-86	
61	Washer 6	6	GB/T97.1-85	
62	Nut M6	6	GB/T6170-86	
63	Washer 6	6	GB/T93-87	
64	Hub	1	W2.5E-01B-01-02D-03-01	
65	Chain Wheel B	1	W2.5E-01B-01-02D-03-03	
66	Chain Wheel	1	W2.5E-01B-01-02D-03-02	52

Cutter Assy（2.2m）W2.5E-01H-01-03-00

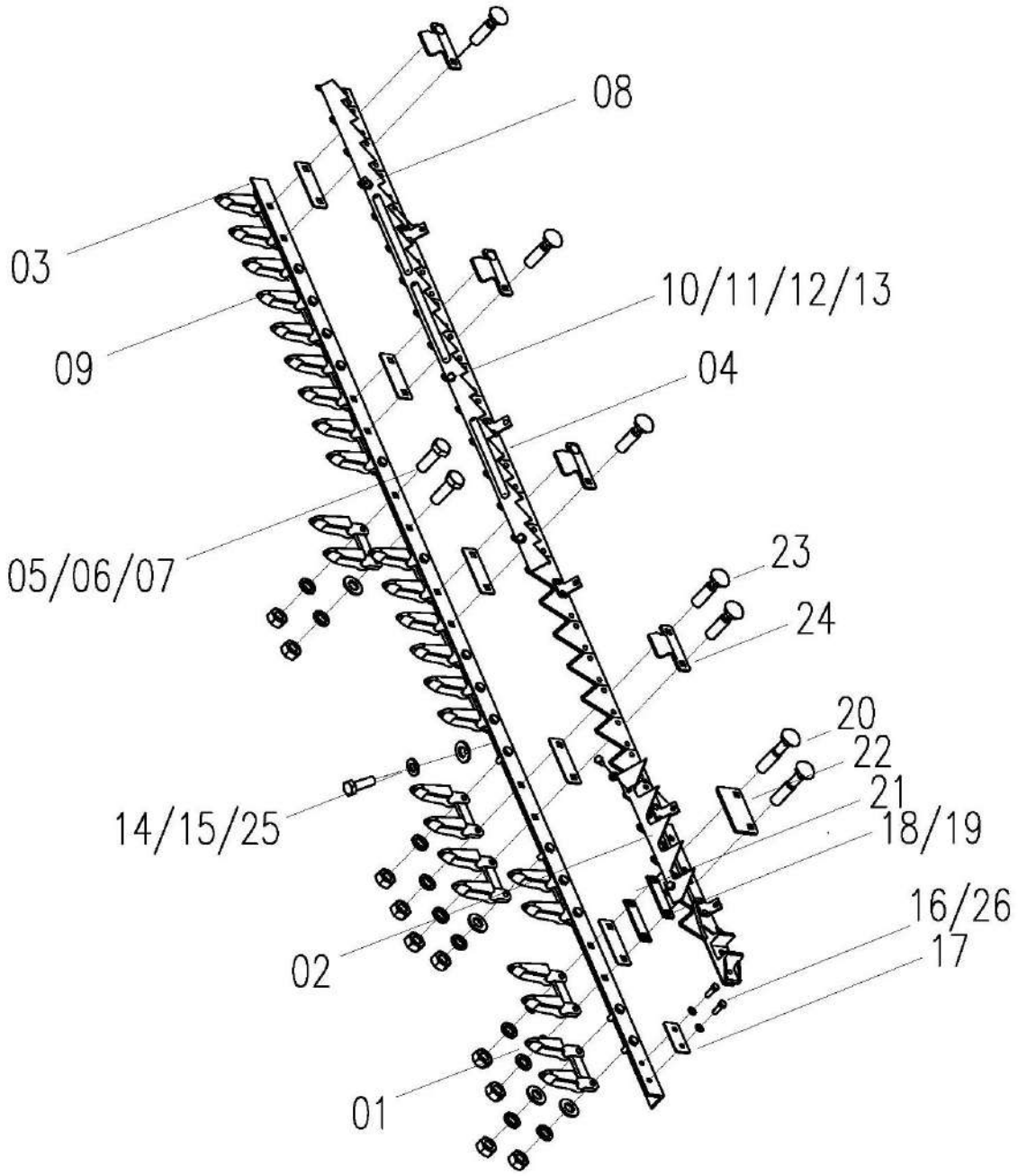

Cutter Assy（2.2m）W2.5E-01H-01-03-00				
No.	**Description**	**Qty**	**Part Code**	**Remark**
01	Blade Guide A	1	W2.0-01-01-03G-01	
02	Conveyor Teeth, Left	1	W2.0-01-01-03G-18	
03	Bar, Blade Fixed	1	W2.0B-01B-01-03G-02	
04	Cutter Bar Assy, Blade Fixed	1	W2.5E-01D-01-03-03-00A	
05	Bolt M10×25	7	GB/T5783-86	
06	Washer 10	37	GB/T93-87	
07	Nut M10	30	GB/T6170-86	
08	Conveyor Teeth, Right	1	W2.5E-01D-01-03-01	
09	Blade Guide B	14	W2.0-01-01-03G-04	
10	Bolt M8×18	5	GB/T5783-86	
11	Washer 8	2	GB/T97.1-85	
12	Washer 8	7	GB/T93-87	
13	Nut M8	7	GB/T6170-86	
14	Bolt M8×20	2	GB/T5783-86	
15	Friction Plate	1	W2.0-01-01-03G-06	
16	Plate	2	W2.0-01-01-03-05	
17	Plate, Adjusting	On demand	W2.0-01-01-03G-07	
18	Bolt M10×50	2	GB/T12-88	
19	Friction Plate	6	W2.0-01-01-03G-08	
20	Press Plate	1	W2.0-01-01-03G-09	
21	Bolt M10×35	10	GB/T12-88	
22	Plate, Blade Pressed	5	W2.0-01-01-03G-10	
23	Bolt M10×30	18	GB/T12-88	
24	Washer 10	7	GB/T96-85	
25	Washer 8	5	GB/T96-85	
26	Plate, Adjusting	On demand	W2.0-01-01-03G-11	

Cutter Assy（2.36m）W3.5D-01D-01-03-00

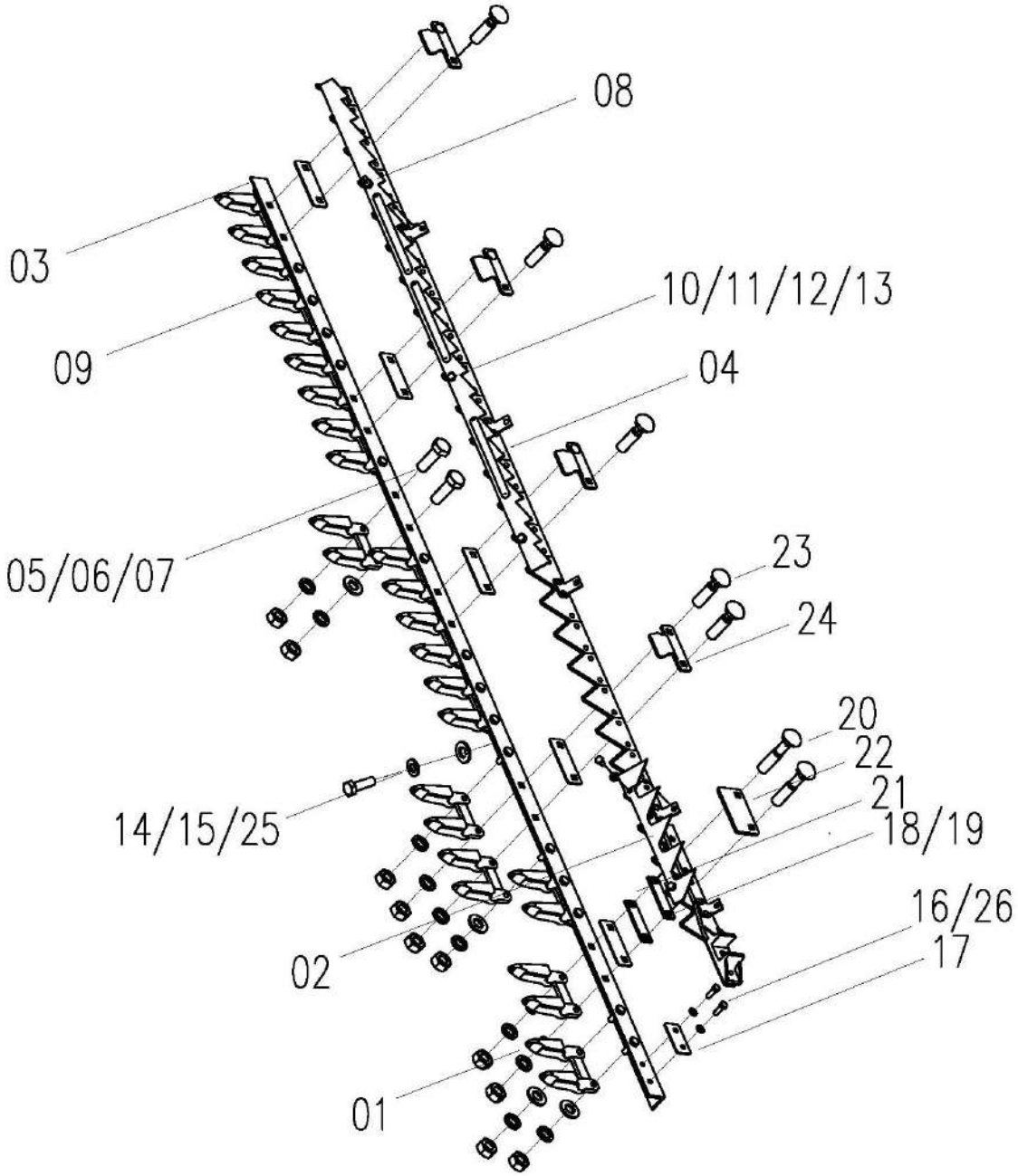

Cutter Assy（2.36m）W3.5D-01D-01-03-00				
No.	**Description**	**Qty**	**Part Code**	**Remark**
01	Blade Guide A	1	W2.0-01-01-03G-01	
02	Conveyor Teeth, Left	1	W3.5D-01D-01-03-18	
03	Bar, Blade Fixed	1	W3.5D-01D-01-03-02	
04	Cutter Bar Assy, Blade Fixed	1	W3.5D-01D-01-03-03-00	
05	Bolt M10×25	7	GB/T5783-86	
06	Washer 10	39	GB/T93-87	
07	Nut M10	32	GB/T6170-86	
08	Conveyor Teeth, Right	1	W3.5D-01-01-03-04	
09	Blade Guide B	14	W2.0-01-01-03G-04	
10	Bolt M8×18	6	GB/T5783-86	
11	Washer 8	2	GB/T97.1-85	
12	Washer 8	8	GB/T93-87	
13	Nut M8	8	GB/T6170-86	
14	Bolt M8×20	2	GB/T5783-86	
15	Friction Plate	1	W2.0-01-01-03G-06	
16	Plate	2	W2.0-01-01-03-05	
17	Plate, Adjusting	On demand	W2.0-01-01-03G-07	
18	Bolt M10×50	2	GB/T12-88	
19	Friction Plate	6	W2.0-01-01-03G-08	
20	Press Plate	1	W2.0-01-01-03G-09	
21	Bolt M10×35	10	GB/T12-88	
22	Plate, Blade Pressed	5	W2.0-01-01-03G-10	
23	Bolt M10×30	20	GB/T12-88	
24	Washer 10	7	GB/T96-85	
25	Washer 8	6	GB/T96-85	
26	Plate, Adjusting	On demand	W2.0-01-01-03G-11	

Reel Transmission Assy（2.2m）W2.5E-01DC-01-04A-00

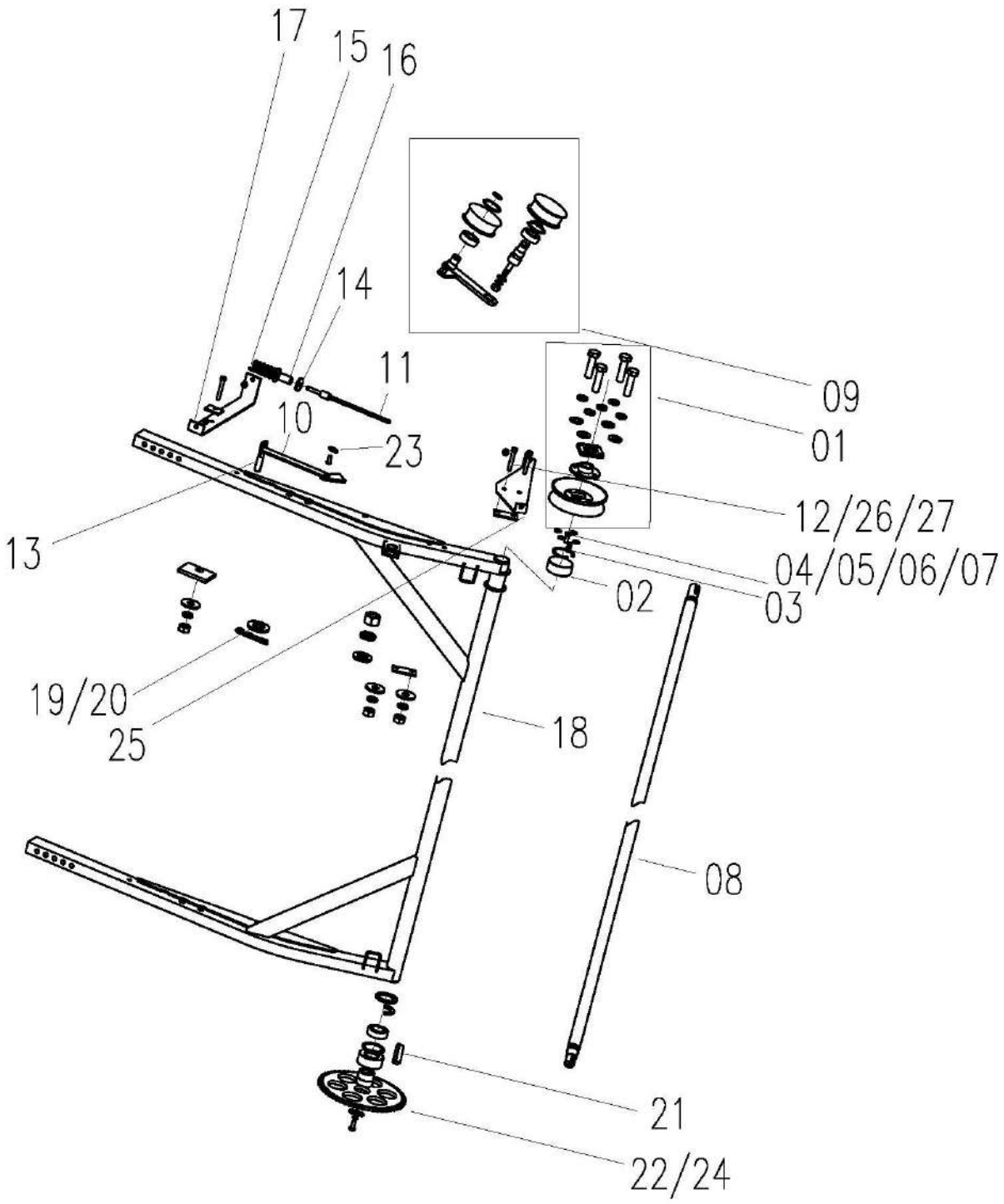

Reel Transmission Assy（2.2m）W2.5E-01DC-01-04A-00				
No.	**Description**	**Qty**	**Part Code**	**Remark**
01	Reel Pulley Assy, Speed Changing	1	W2.5E-01XCP-01-04A-01-00	
02	Bearing 6205-2RS	2	GB/T276-94	
03	Key C8×25	1	GB/T1096-79	
04	Bolt M8×20	2	GB/T5783-86	
05	Washer 8	5	GB/T93-87	
06	Retaining Ring for Shaft	2	W2.0-02-11-08	
07	Circlip for Hole, 52	2	GB/T893.1-86	
08	Shaft Weld, Frame	1	W2.0B-01B-01-04-04-00	
09	Tension Arm Assy	1	W2.5E-01XCP-01-04-08-00	
10	Connecting Plate Weld	1	W3.5-01AC-01-04-10-00	
11	Screw Rod Weld	1	W3.5-01AC-01-04-11-00	
12	Nut M8	5	GB/T6170	
13	Rotary Axis	1	W3.5-01AC-01-04-03A	
14	Retaining Ring	2	W3.5-01AC-01-04-12	
15	Spring	1	W3.5-01AC-01-04-09	
16	Sleeve	1	W3.5-01AC-01-04-13	
17	Fixed Seat Weld, Front	1	W2.5E-01B-01-04A-03-00	
18	Frame Assy, Support	1	W2.5E-01D-01-04C-02-00	
19	Washer 14	1	GB/T96-85	
20	Pin	2	XSS46-06	
21	Key C8×32	1	GB/T1096-79	
22	Chain Wheel Weld	1	W2.5E-01B-01-04-11-00	
23	Washer 8	4	GB/T97.1	
24	Adjustment Gasket	On demand	W2.0-01-01-04G-10	
25	Fixed Seat Weld, Rear	1	W2.5E-01XCT-01-04C-04-00	
26	Bolt M8X55	3	GB/T5782-86	
27	Washer 8	3	GB/T96-85	

Reel Transmission Assy（2.2m）W2.5E-01DC-01-04A-00

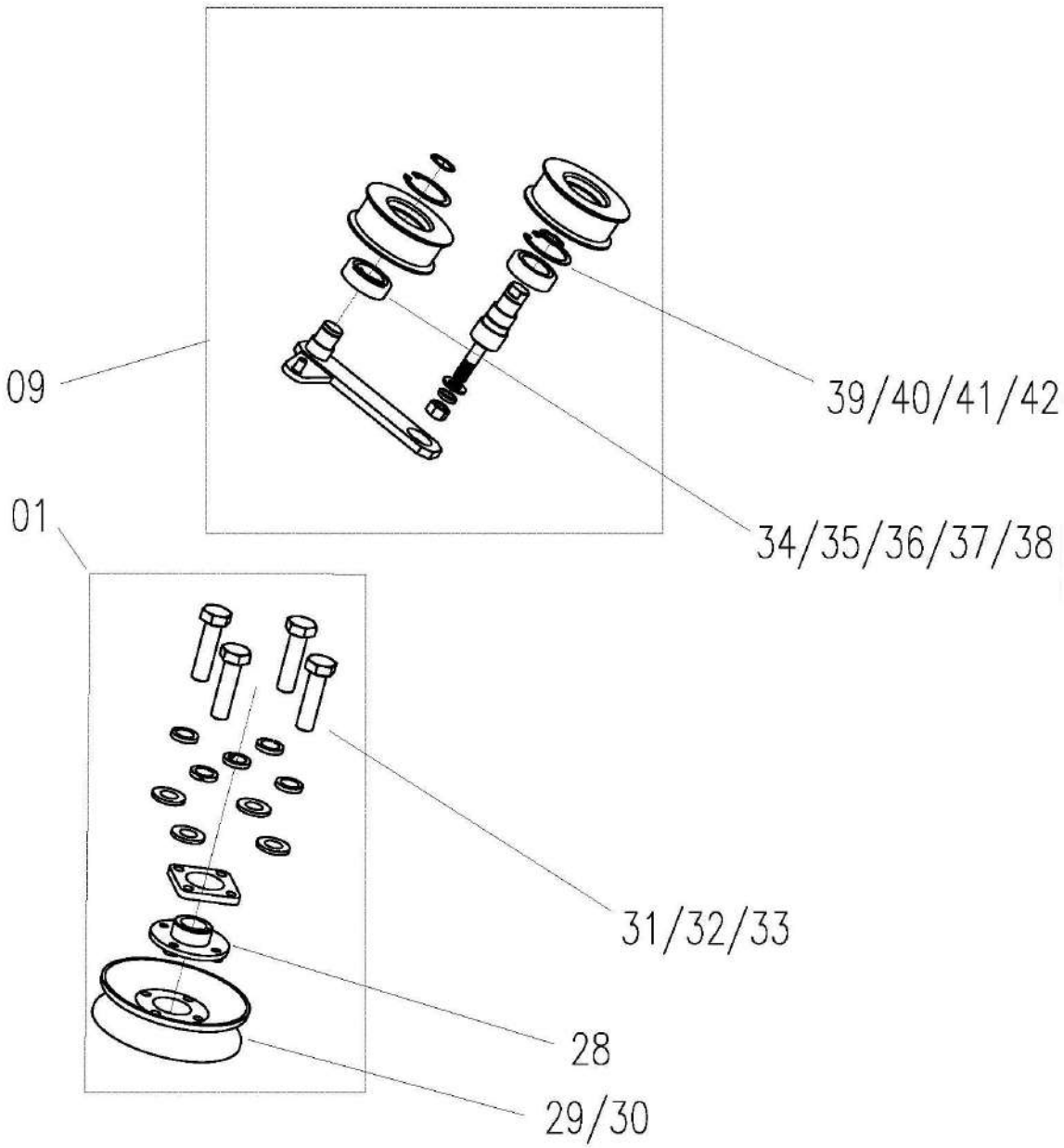

Reel Transmission Assy（2.2m）W2.5E-01DC-01-04A-00				
No.	**Description**	**Qty**	**Part Code**	**Remark**
28	Wheel	1	W2.5E-01XCP-01-04A-01-01	
29	Belt Pulley	2	W2.5E-01XCP-01-04A-01-02	
30	Plate	4	W2.5E-01XCP-01-04A-01-03	
31	Bolt M8X30	4	GB/T5783-86	
32	Washer 8	4	GB/T93-87	
33	Washer 8	4	GB/T97.1-85	
34	Tension wheel	2	W2.5E-01XCP-01-04-08-01	
35	Bearing 6204-2RS	2	GB/T276-94	
36	Tension Arm Weld	1	W3.5-01AC-01-04-08-01-00	
37	Retaining Ring for Shaft 20	2	GB/T894.1	
38	Retaining Ring for Hole 47	2	GB/T893.1-86	
39	Rotary Axis	1	W2.5E-01B-01-04-08A-02	
40	Washer 12	1	GB/T93-87	
41	Nut M12	1	GB/T6170-86	
42	Washer 12	1	GB/T97.1-85	

Reel Transmission Assy（2.36m）W3.5-01CAC-01-04A-00

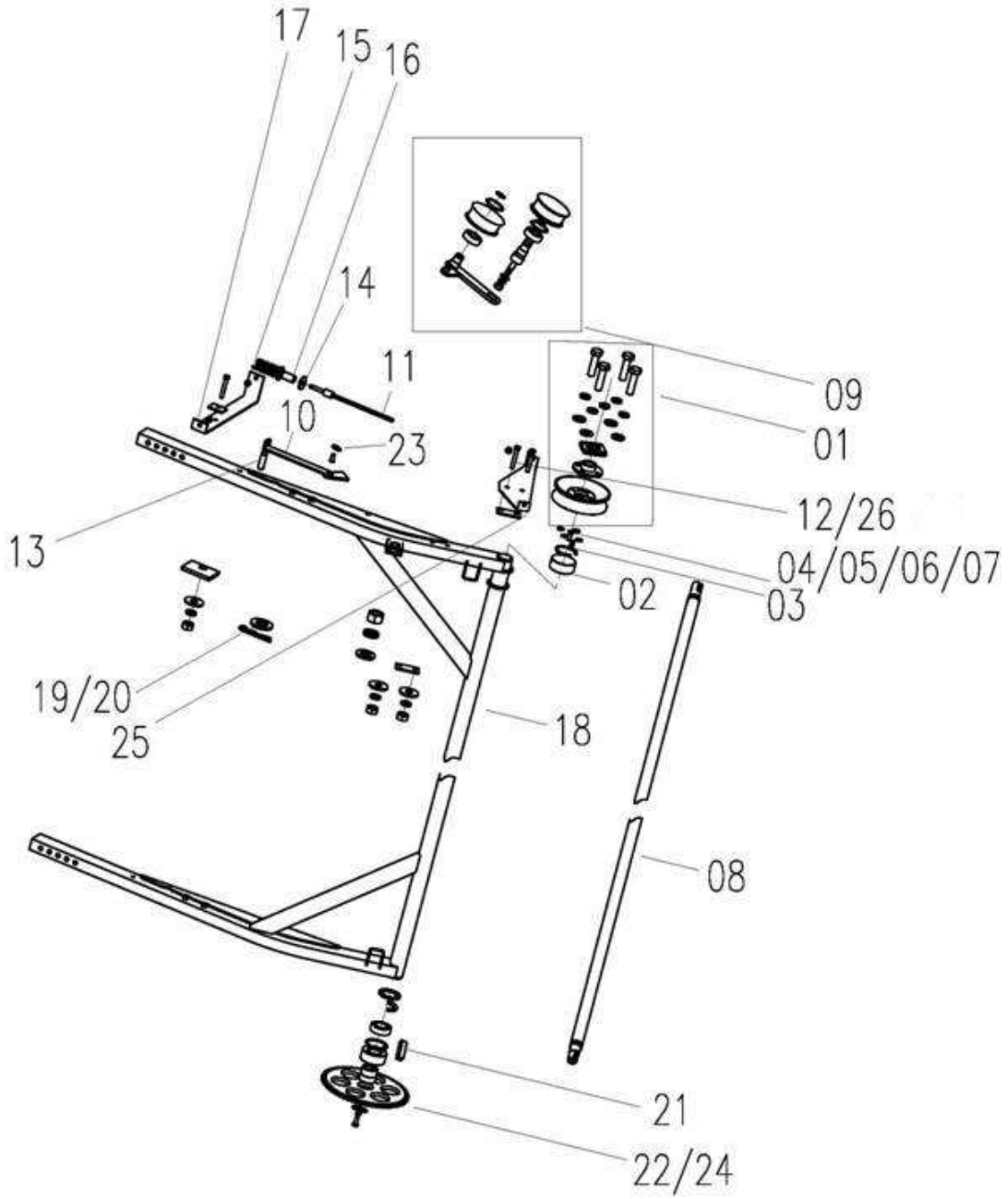

Reel Transmission Assy（2.36m）W3.5-01CAC-01-04A-00				
No.	**Description**	**Qty**	**Part Code**	**Remark**
01	Reel Pulley Assy, Speed Changing	1	W2.5E-01XCP-01-04A-01-00	
02	Bearing 6205-2RS	2	GB/T276-94	
03	Key C8×25	1	GB/T1096-79	
04	Bolt M8×20	2	GB/T5783-86	
05	Washer 8	5	GB/T93-87	
06	Retaining Ring for Shaft	2	W2.0-02-11-08	
07	Circlip for Hole, 52	2	GB/T893.1-86	
08	Shaft Weld, Frame	1	W3.5D-01D-01-04-04-00	
09	Tension Arm Assy	1	W2.5E-01XCP-01-04-08-00	
10	Connecting Plate Weld	1	W3.5-01AC-01-04-10-00	
11	Screw Rod Weld	1	W3.5-01AC-01-04-11-00	
12	Nut M8	5	GB/T6170	
13	Rotary Axis	1	W3.5-01AC-01-04-03A	
14	Retaining Ring	2	W3.5-01AC-01-04-12	
15	Spring	1	W3.5-01AC-01-04-09	
16	Sleeve	1	W3.5-01AC-01-04-13	
17	Fixed Seat Weld, Front	1	W2.5E-01B-01-04A-03-00	
18	Frame Assy, Support	1	W3.5D-01D-01-04C-02-00	
19	Washer 14	1	GB/T96-85	
20	Pin	2	XSS46-06	
21	Key C8×32	1	GB/T1096-79	
22	Chain Wheel Weld	1	W2.5E-01B-01-04-11-00	
23	Washer 8	3	GB/T96-85	
24	Adjustment Gasket	/	W2.0-01-01-04G-10	
25	Fixed Seat Weld, Rear	1	W2.5E-01XCT-01-04C-04-00	
26	Bolt M8X55	3	GB/T5782-86	

Reel Transmission Assy（2.36m）W3.5-01CAC-01-04A-00

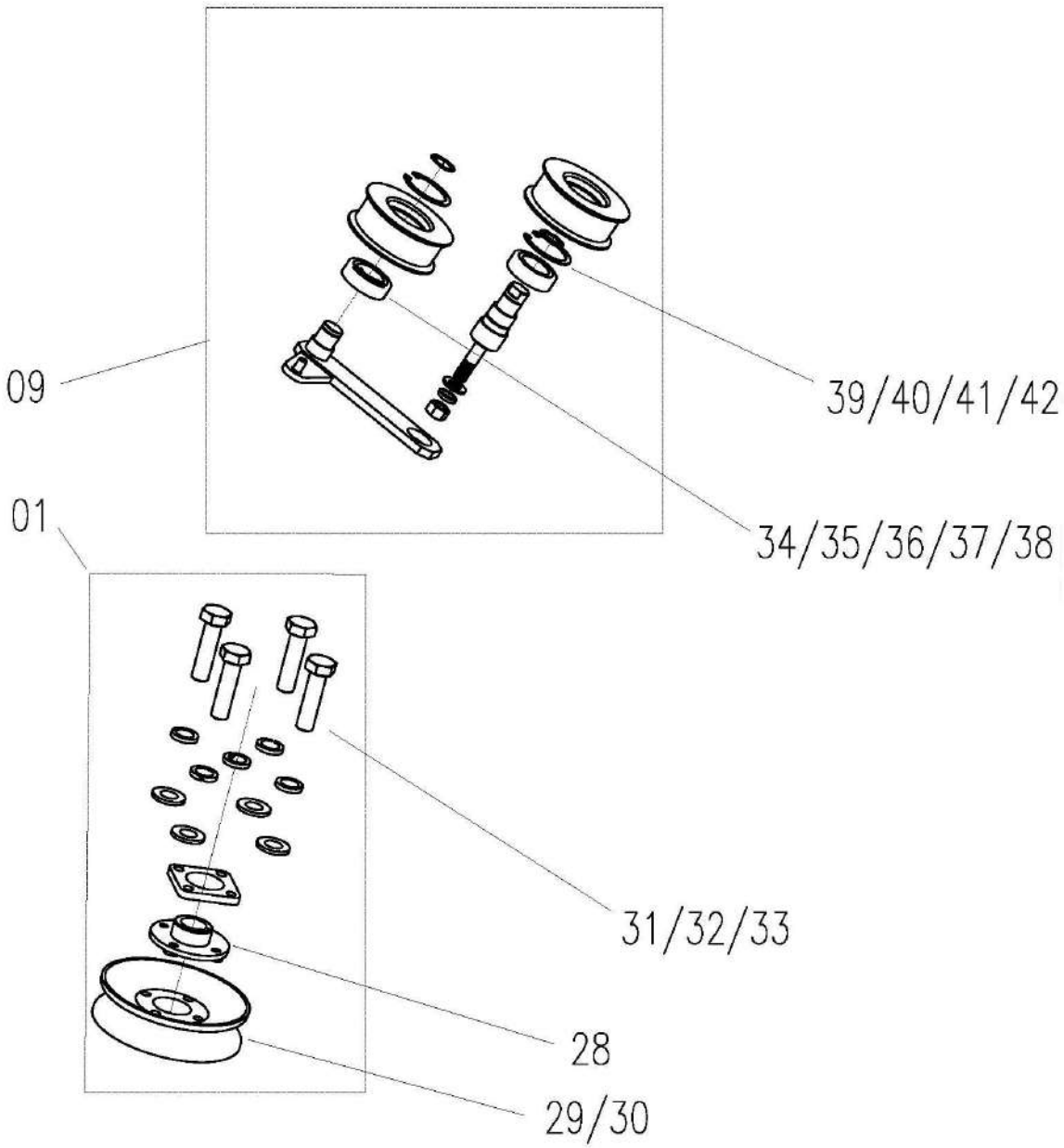

Reel Transmission Assy（2.36m）W3.5-01CAC-01-04A-00				
No.	**Description**	**Qty**	**Part Code**	**Remark**
28	Wheel	1	W2.5E-01XCP-01-04A-01-01	
29	Belt Pulley	2	W2.5E-01XCP-01-04A-01-02	
30	Plate	4	W2.5E-01XCP-01-04A-01-03	
31	Bolt M8X30	4	GB/T5783-86	
32	Washer 8	4	GB/T93-87	
33	Washer 8	4	GB/T97.1-85	
34	Tension wheel	2	W2.5E-01XCP-01-04-08-01	
35	Bearing 6204-2RS	2	GB/T276-94	
36	Tension Arm Weld	1	W3.5-01AC-01-04-08-01-00	
37	Retaining Ring for Shaft 20	2	GB/T894.1	
38	Retaining Ring for Hole 47	2	GB/T893.1-86	
39	Rotary Axis	1	W2.5E-01B-01-04-08A-02	
40	Washer 12	1	GB/T93-87	
41	Nut M12	1	GB/T6170-86	
42	Washer 12	1	GB/T97.1-85	

Blade Driving Assy（2.2m）W3.5-01A-01-07-00

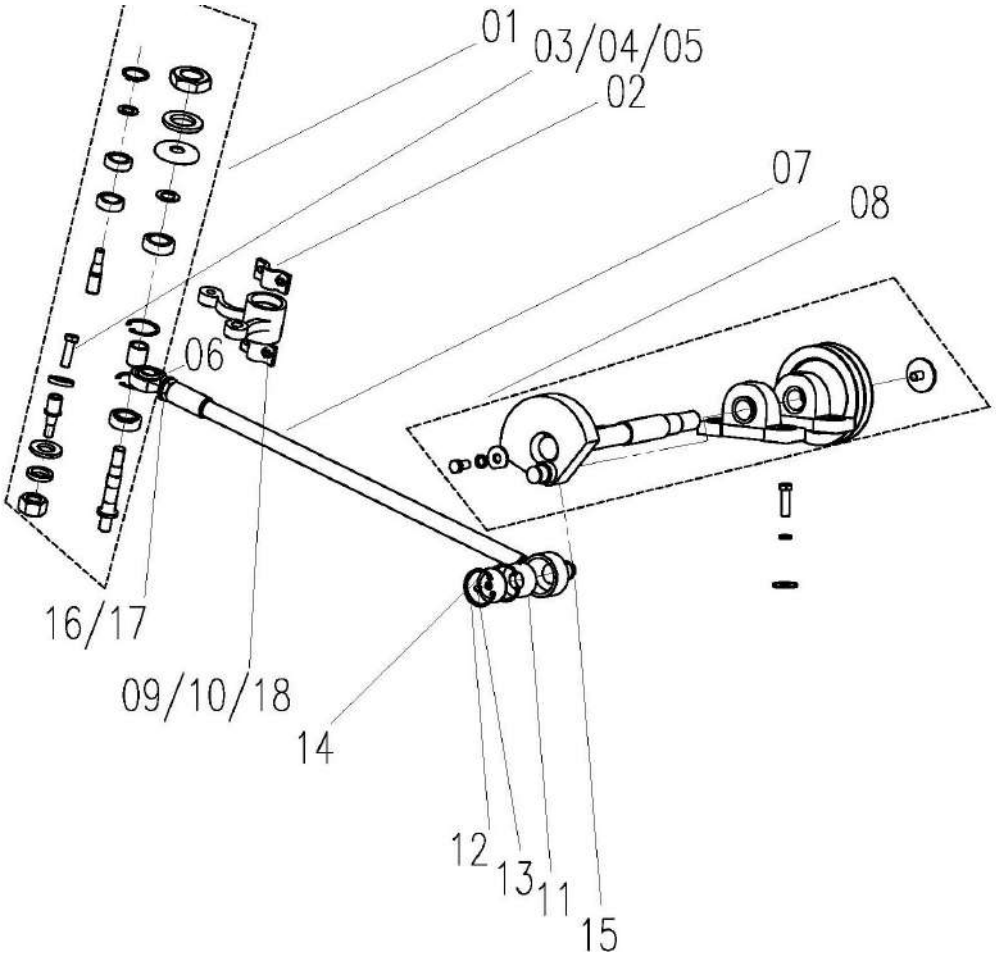

No.	Description	Qty	Part Code	Remark
01	Upper Cutter Swing Lever Assy	1	W2.0-01-01-07-01-00	
02	Press Plate	2	W2.0-01-01-07-03	
03	Bolt M12 × 20	1	GB/T5783-86	
04	Washer 12	1	GB/T93-87	
05	Press plate (II)	1	W2.0-01-01-07-04	
06	Bearing	1	W2.0-01-01-07-05-00	
07	Upper Connecting Rod Weld	1	W2.0-01-01-07-06-00	
08	Pendulum Cross Bridge Assy	1	W3.5-01A-01-07-02-00	
09	Bolt M10 × 30	4	GB/T5783-86	
10	Washer 10	4	GB/T93-87	
11	Self-aligning Bearing 1205	1	W2.0-01-01-07-12	
12	Retaining Ring for Holes 52	2	GB/T893.1-86	
13	Oil Cup M6	1	GB/T1152-89	
14	Dust Cover	1	W2.0-01-01-07-07	
15	Circlip for Shaft 25	1	GB/T894.1	
16	Sleeve	1	W.1.5B-08	
17	Steel Hose Clamp	1	25-40	
18	Adjustment Plate	/	W2.0-01-01-07-08	

Blade Driving Assy（2.2m）W3.5-01A-01-07-00

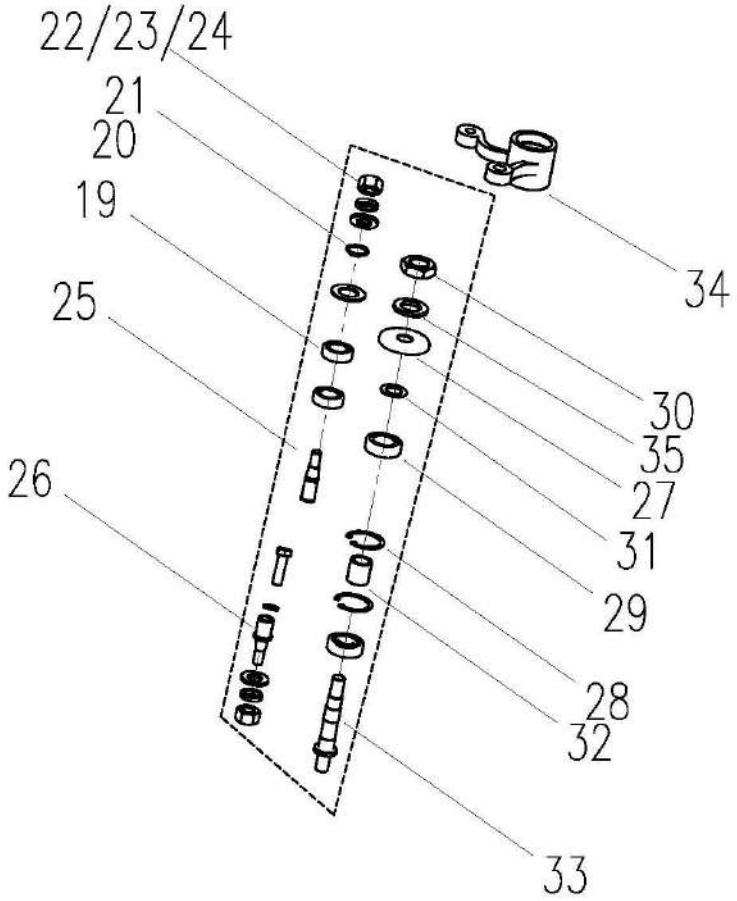

No.	Description	Qty	Part Code	Remark
19	Bearing 6203-2RS	2	W2.0-01-01-07-01-10	
20	Fender Cover	1	W2.0-01-01-07-01-08	
21	Circlip for Shaft 17	1	GB/T894.1	
22	Washer 12	2	GB/T93-87	
23	Washer 12	2	GB/T97.1-85	
24	Nut 12	2	GB/T6170-86	
25	Pin Shaft	1	W2.0-01-01-07-01-09	
26	Mandrel	1	W2.0-01-01-07-01-03	
27	Dust Cover	1	W2.0-01-01-07-01-04	
28	Retaining Ring for Hole 47	2	GB/T893.1-86	
29	Bearing 6204-RS	2	GB/T276-94	
30	Nut M18X1.5	1	GB6173-86	
31	Middle Spacer	1	W2.0-01-01-07-01-05	
32	Spacer	1	W2.0-01-01-07-01-06	
33	Pendulum Shaft	1	W2.0-01-01-07-01-01	
34	Upper Cutter Swing Lever	1	W2.0-01-01-07-01-02	
35	Sleeve	1	W2.0-01-01-07-01-07	

Pendulum Cross Bridge Assy（2.2m）W3.5-01A-01-07-00

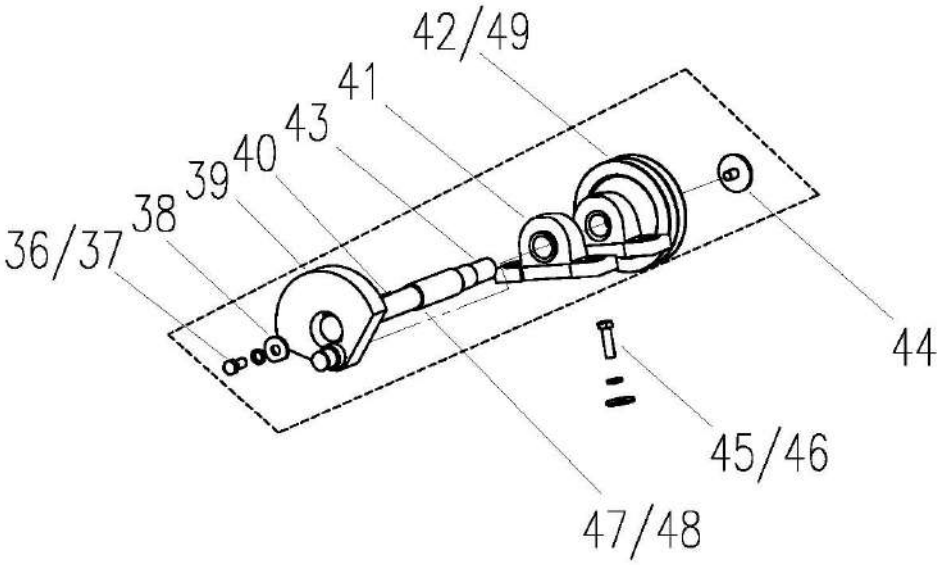

No.	Description	Qty	Part Code	Remark
36	Bolt M12 × 25	2	GB/T5783-86	
37	Washer 12	6	GB/T93-87	
38	Notch Plate	1	W2.0-01-01-07-02-01	
39	Eccentric Crank Weld	1	W2.5E-01B-01-07-02-02A-00	
40	Key A8 × 45	1	GB/T1096-79	
41	Bearing UCP206	2	W2.0-01-01-07-02-08	
42	Conveyor Passive Pulley	1	W2.5E-01B-01-07-02-03	Domestic
43	C8 × 40	1	GB/T1096-79	
44	Press Plate	1	W2.0-01-01-07-02-04	
45	Bolt M12 × 40	4	GB/T5783-86	
46	Washer 12	4	GB/T97.1-85	
47	Pendulum Shaft	1	W2.5E-01D-01-07-02-05A	
48	Pipe	1	W2.5E-01H-01-07-02-01	
49	Conveyor Passive Pulley	1	W2.5E-01B-01-07-02-03A	Foreign

Blade Driving Assy（2.36m） W3.5D-01D-01-07-00

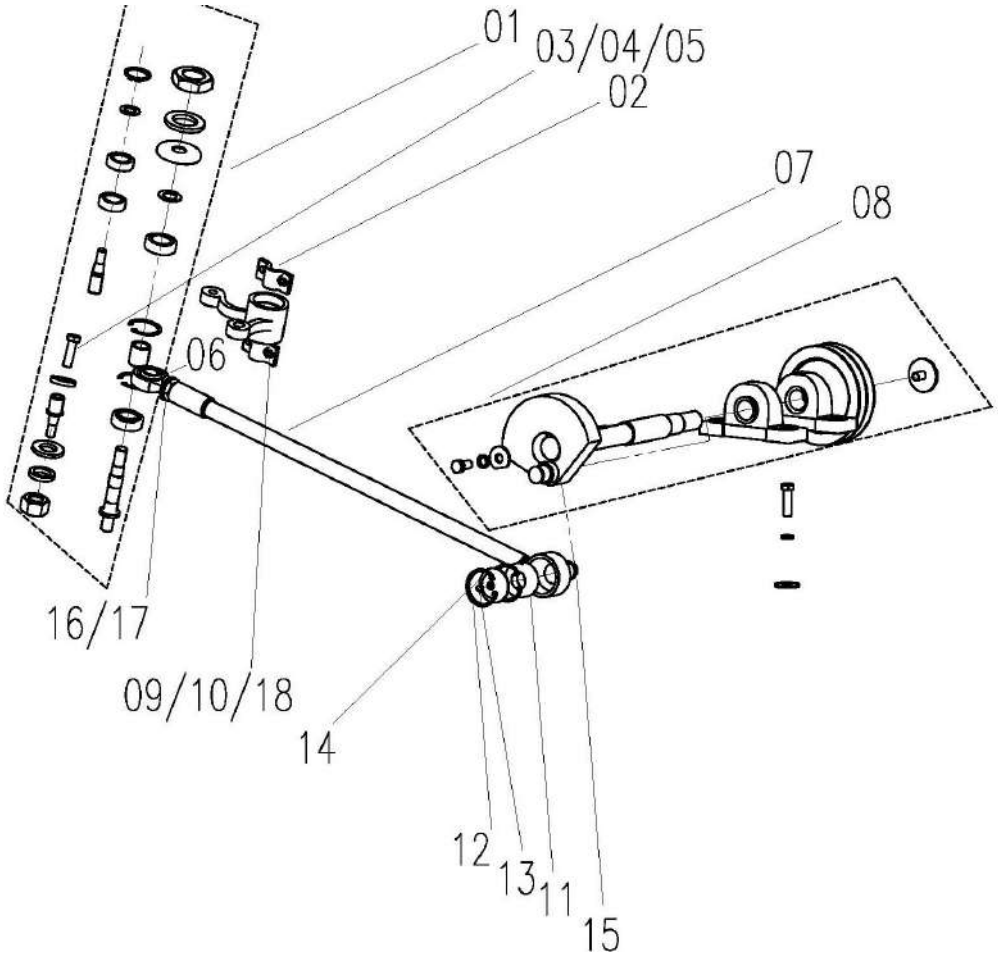

No.	Description	Qty	Part Code	Remark
01	Upper Cutter Swing Lever Assy	1	W2.0-01-01-07-01-00	
02	Press Plate	2	W2.0-01-01-07-03	
03	Bolt M12 × 20	1	GB/T5783-86	
04	Washer 12	1	GB/T93-87	
05	Press plate (II)	1	W2.0-01-01-07-04	
06	Bearing	1	W2.0-01-01-07-05-00	
07	Upper Connecting Rod Weld	1	W2.0-01-01-07-06-00	
08	Pendulum Cross Bridge Assy	1	W3.5D-01D-01-07-02-00	
09	Bolt M10 × 30	4	GB/T5783-86	
10	Washer 10	4	GB/T93-87	
11	Self-aligning Bearing 1205	1	W2.0-01-01-07-12	
12	Retaining Ring for Holes 52	2	GB/T893.1-86	
13	Oil Cup M6	1	GB/T1152-89	
14	Dust Cover	1	W2.0-01-01-07-07	
15	Circlip for Shaft 25	1	GB/T894.1	
16	Sleeve	1	W.1.5B-08	
17	Steel Hose Clamp	1	25-40	
18	Adjustment Plate	/	W2.0-01-01-07-08	

Upper Cutter Swing Lever Assy（2.36m） W3.5D-01D-01-07-00

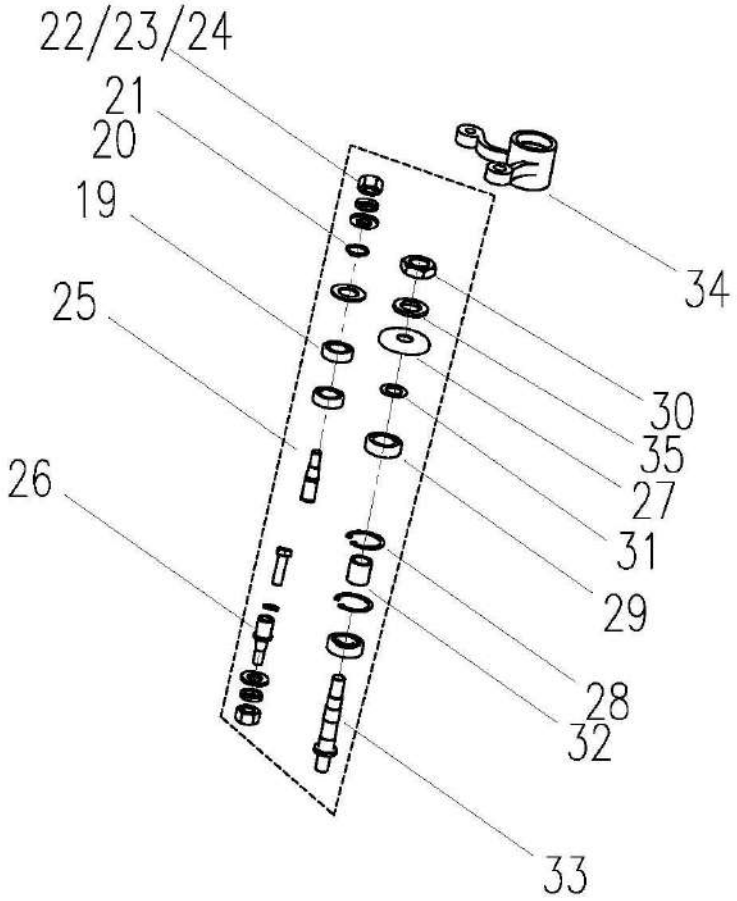

No.	Description	Qty	Part Code	Remark
19	Bearing 6203-2RS	2	W2.0-01-01-07-01-10	
20	Fender Cover	1	W2.0-01-01-07-01-08	
21	Circlip for Shaft 17	1	GB/T894.1	
22	Washer 12	2	GB/T93-87	
23	Washer 12	2	GB/T97.1-85	
24	Nut 12	2	GB/T6170-86	
25	Pin Shaft	1	W2.0-01-01-07-01-09	
26	Mandrel	1	W2.0-01-01-07-01-03	
27	Dust Cover	1	W2.0-01-01-07-01-04	
28	Retaining Ring for Hole 47	2	GB/T893.1-86	
29	Bearing 6204-RS	2	GB/T276-94	
30	Nut M18X1.5	1	GB6173-86	
31	Middle Spacer	1	W2.0-01-01-07-01-05	
32	Spacer	1	W2.0-01-01-07-01-06	
33	Pendulum Shaft	1	W2.0-01-01-07-01-01	
34	Upper Cutter Swing Lever	1	W2.0-01-01-07-01-02	
35	Sleeve	1	W2.0-01-01-07-01-07	

Pendulum Cross Bridge Assy（2.36m） W3.5D-01D-01-07-00

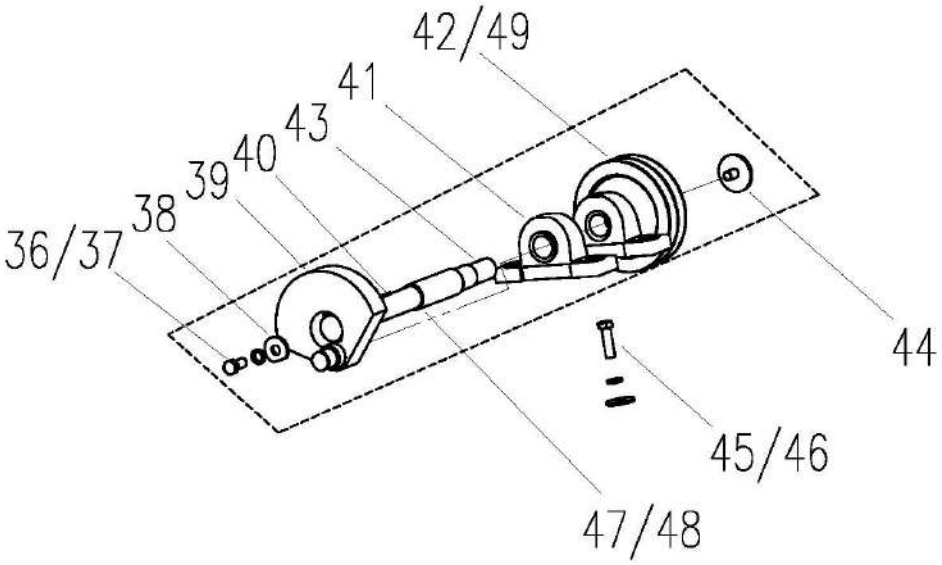

No.	Description	Qty	Part Code	Remark
36	Bolt M12 × 25	2	GB/T5783-86	
37	Washer 12	6	GB/T93-87	
38	Notch Plate	1	W2.0-01-01-07-02-01	
39	Eccentric Crank Weld	1	W2.5E-01B-01-07-02-02A-00	
40	Key A8 × 45	1	GB/T1096-79	
41	Bearing UCP206	2	W2.0-01-01-07-02-08	
42	Conveyor Passive Pulley	1	W2.5E-01B-01-07-02-03	Domestic
43	C8 × 40	1	GB/T1096-79	
44	Press Plate	1	W2.0-01-01-07-02-04	
45	Bolt M12 × 40	4	GB/T5783-86	
46	Washer 12	4	GB/T97.1-85	
47	Pendulum Shaft	1	W3.5D-01D-01-07-02-05	
48	Pipe	1	W3.5D-01D-01-07-02-01	
49	Conveyor Passive Pulley	1	W2.5E-01B-01-07-02-03A	Foreign

Chain Tension Wheel Assy W2.5E-01B-01-11-00

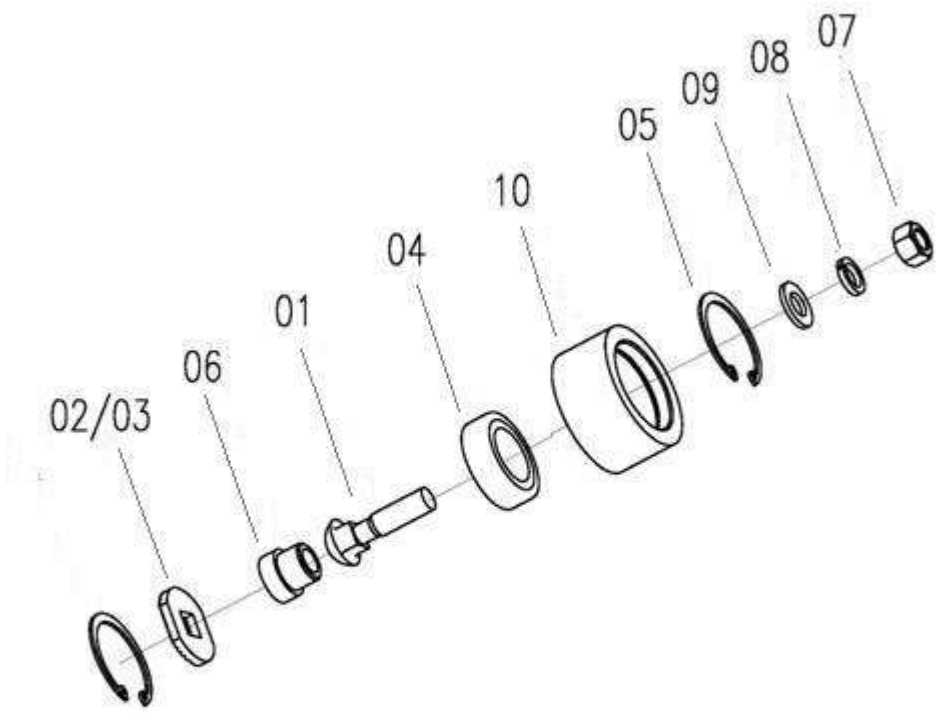

No.	Description	Qty	Part Code	Remark
01	Bolt M12 × 50	1	GB/T12-88	
02	Plate	1	W2.5E-01B-01-11-03	
03	Adjustment Gasket	/	W2.0-01-01-11-03	
04	Bearing 6204-2RS	1	GB/T276-94	
05	Retaining Ring for Hole 47	2	GB/T893.1-86	
06	Spacer	1	W2.5E-01B-01-11-02	
07	Nut M12	1	GB/T6170-86	
08	Washer 12	1	GB/T93-87	
09	Washer 12	1	GB/T97.1-85	
10	Nylon Tension Wheel	1	WD.1F.33-02	

Header Tension Wheel Assy W2.5E-01B-01-15-00

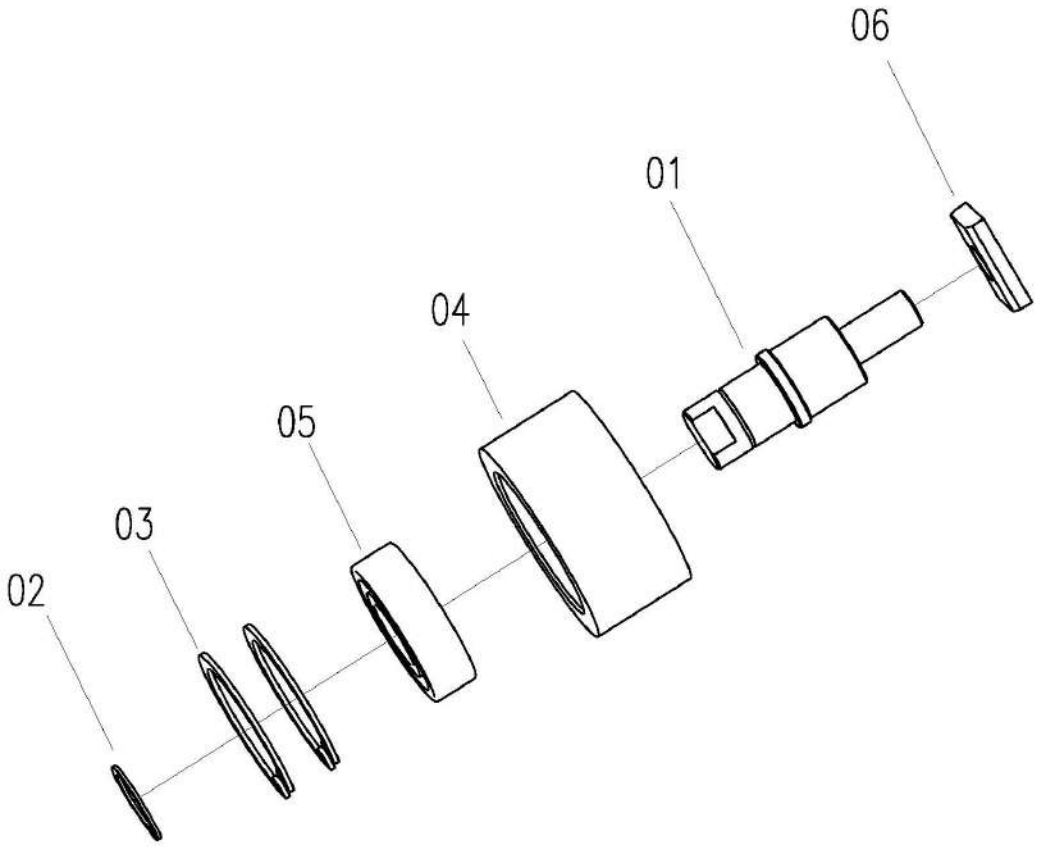

No.	Description	Qty	Part Code	Remark
01	Tension Wheel	1	W2.0-01-01-10-01	
02	Retaining Ring for Shaft 20	1	GB/T894.1	
03	Retaining Ring for Hole 47	2	GB/T893.1-86	
04	Nylon Tension Wheel	1	WD.1F.33-02	
05	Bearing 6204-2RS	1	GB/T276-94	
06	Nut	1	W2.0-01-01-10-02	

Left Divider Assy W3.5H-01-01-08-00

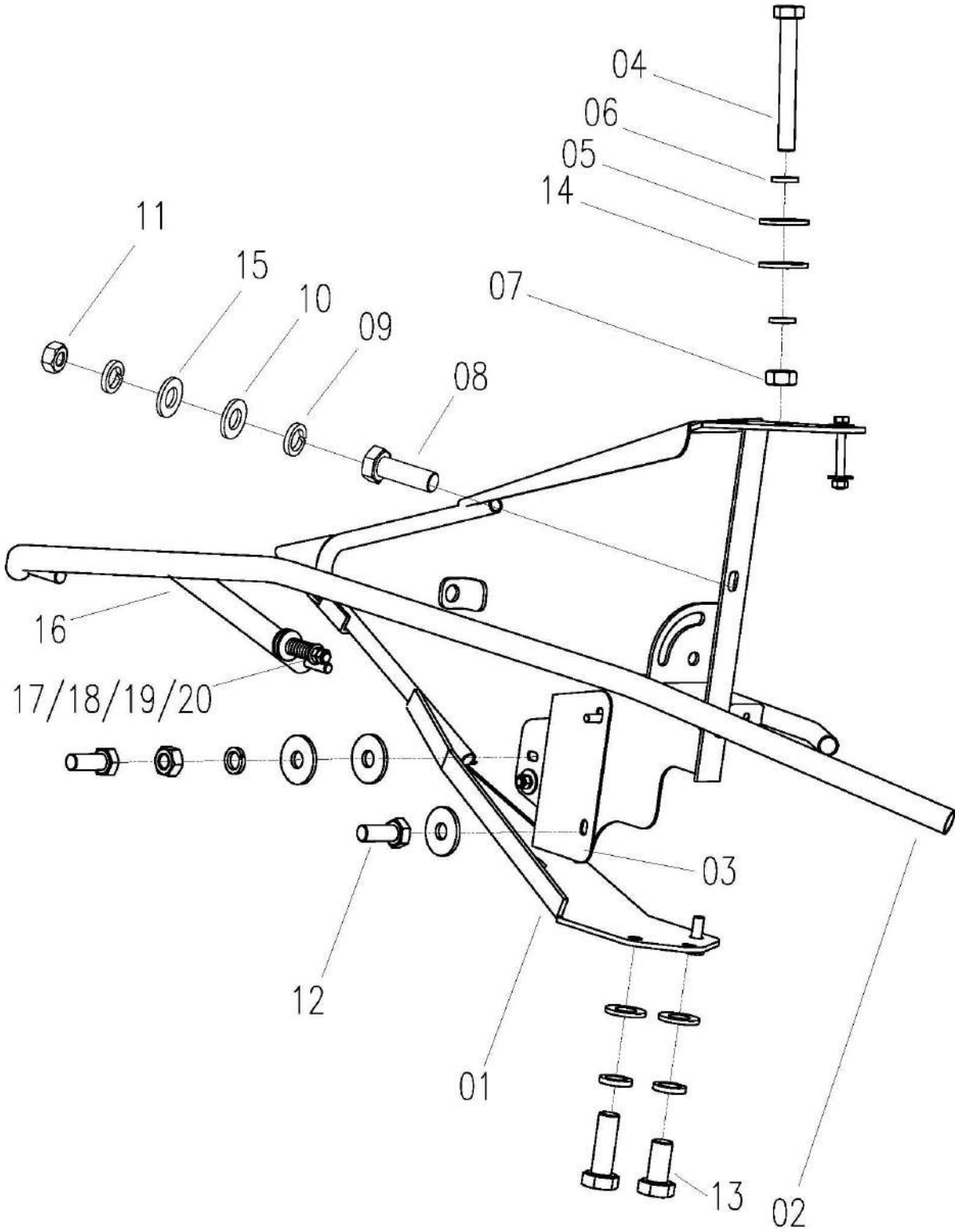

Left Divider Assy W3.5H-01-01-08-00

No.	Description	Qty	Part Code	Remark
01	Left Divider Weld	1	W2.5E-01W-01-08B-01-00	
02	Movable Branch Tube Assy	1	W2.5E-01W-01-08A-03-00	
03	Baffle Plate	1	W2.5E-01B-01-08-02	
04	Bolt M8X65	2	GB/T5782-86	
05	Washer 8	4	GB/T96-85	
06	Washer 8	6	GB/T93-87	
07	Nut M8	4	GB/T6170-86	
08	Bolt M10X30	4	GB/T5783-86	
09	Washer 10	8	GB/T93-87	
10	Washer 10	5	GB/T97.1-85	
11	Nut M10	2	GB/T6170-86	
12	Bolt M8X20	4	GB/T5783-86	
13	Bolt M10X20	1	GB/T5783-86	
14	Washer 8	4	GB/T97.1-85	
15	Washer 10	2	GB/T96-85	
16	Movable Branch Tube	1	W2.5E-01W-01-08A-03-01-00	
17	Spring	1	L20.1.2-01	
18	Nut M10	2	GB/T6170	
19	Washer 10	1	GB/T97.1	
20	Washer 10	1	GB/T96	

Right Divider Assy W3.5H-01-01-06-00

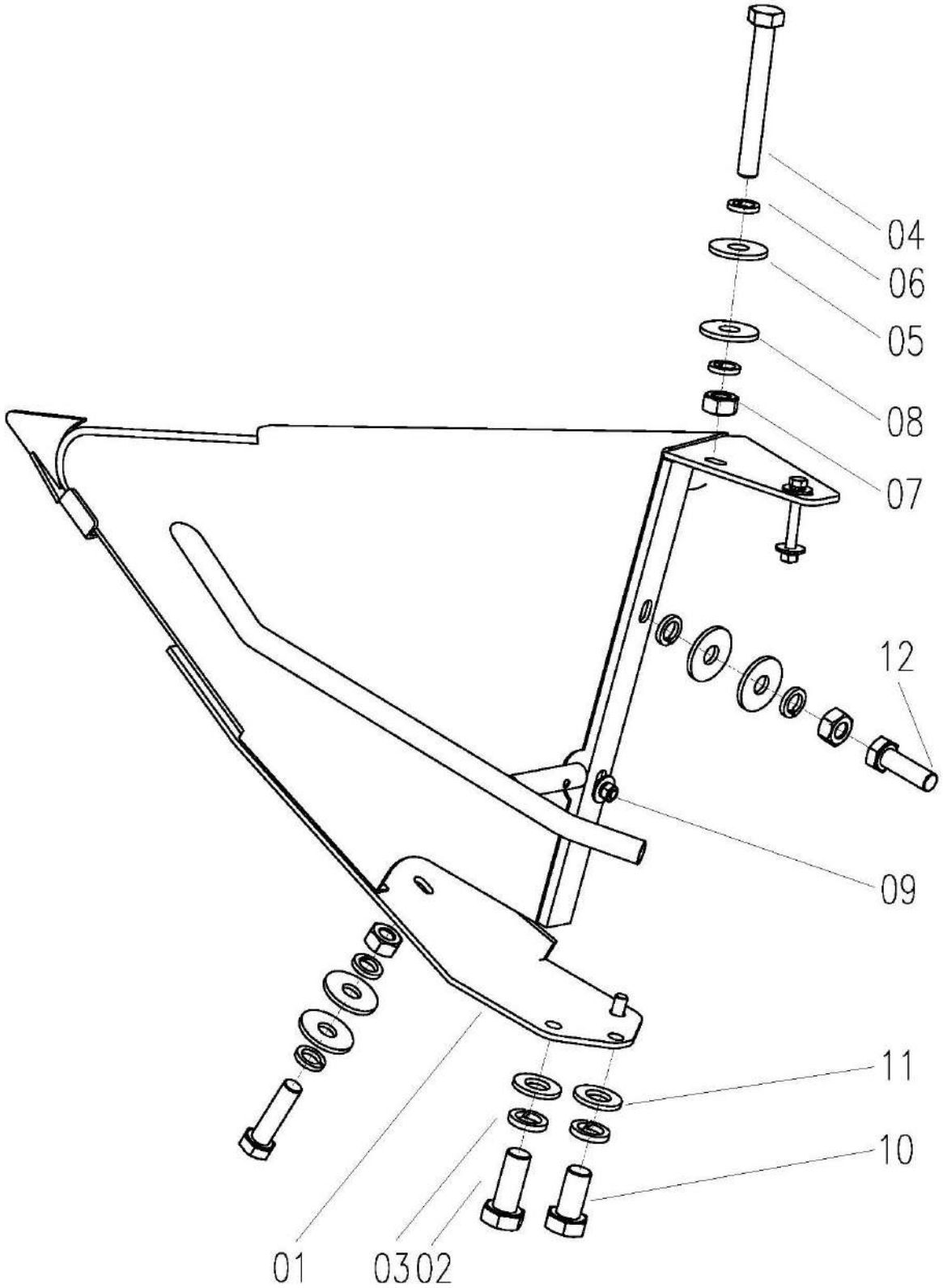

Right Divider Assy W3.5H-01-01-06-00				
No.	**Description**	**Qty**	**Part Code**	**Remark**
01	Right Divider Weld	1	W2.5E-01W-01-06B-01-00	
02	Bolt M10X25	2	GB/T5783-86	
03	Washer 10	3	GB/T93-87	
04	Bolt M8X65	2	GB/T5782-86	
05	Washer 8	8	GB/T96-85	
06	Washer 8	9	GB/T93-87	
07	Nut M8	5	GB/T6170-86	
08	Washer 8	2	GB/T97.1-86	
09	Bolt M8X25	2	GB/T5783-86	
10	Bolt M8X20	1	GB/T5783-86	
11	Washer 10	3	GB/T97.1-86	
12	Bolt M8X30	1	GB/T5783-86	

Conveyor Assy W3.5H-01-02-00

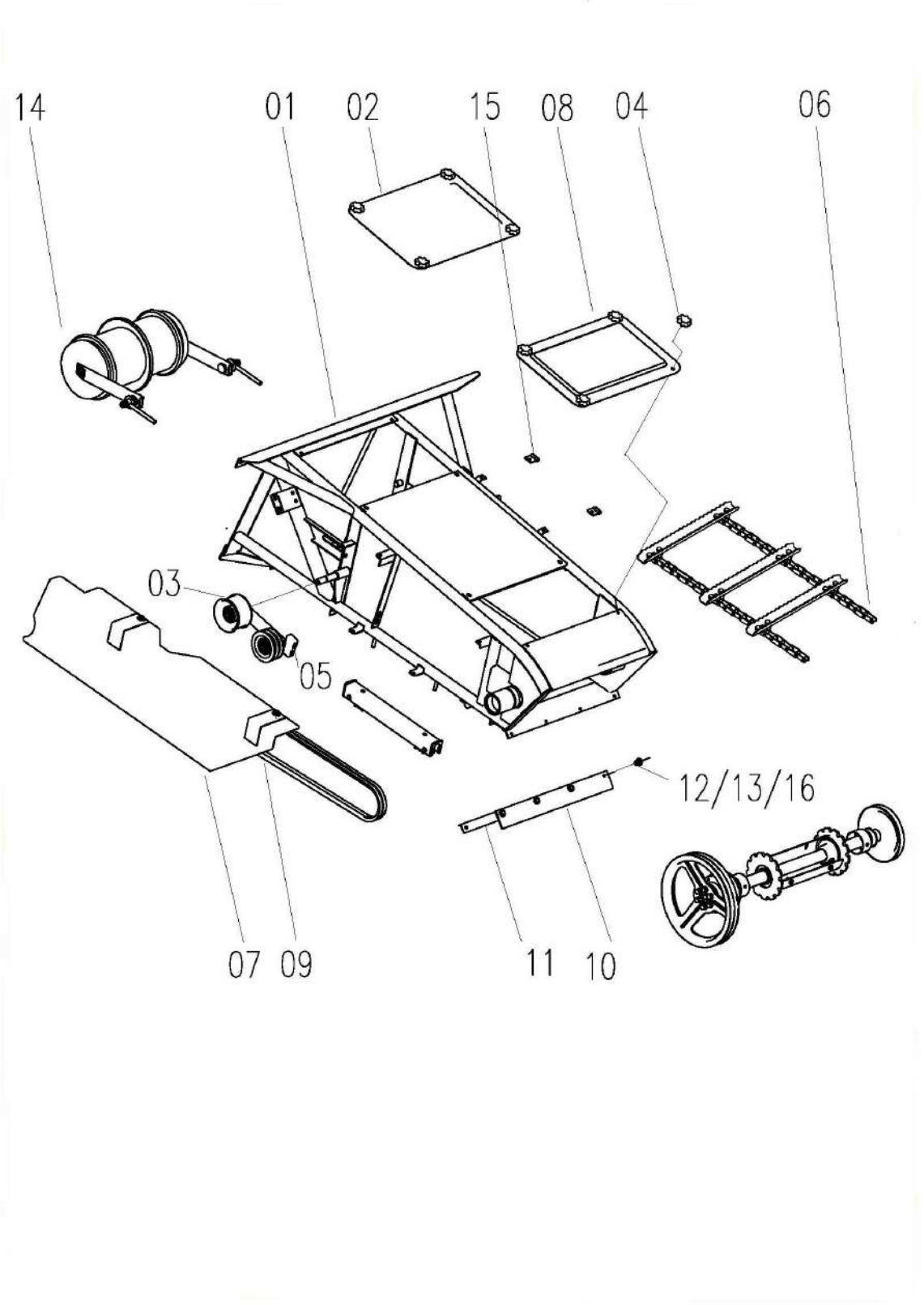

Conveyor Assy W3.5H-01-02-00

No.	Description	Qty	Part Code	Remark
01	Conveyor Weld	1	W3.5H-01-02-01A-00	
02	Upper Cover	1	W2.5E-01B-02-03A	
03	Tension Pulley Assy	1	W2.5E-01M-02S-05-00	
04	Bolt	8	W2.5E-01B-02-37	
05	Baffle Plate	1	W3.5H-01-02-15	
06	Conveyor Chain Assy	1	W3.5H-01-02-09B-00	
07	Cover Assy	1	W3.5H-01-02-10-00	
08	Upper Cover B	1	W2.5E-01B-02Y-08	
09	Belt, Conveyor	2	W3.5H-01-02-11A	
10	Canvas	1	W2.5E-01B-02-12B	
11	Press Plate	1	W2.5-01-02-18	
12	Washer 6	22	GB/T93-87	
13	Nut M8	6	GB/T6170-86	
14	Driven Wheel Assy	1	W2.5E-01B-02Y-02-00	
15	Hose Clamp	4	W2.5E-01B-28	
16	Bolt M8×25	4	GB/T5783-86	

Conveyor Assy W3.5H-01-02-00

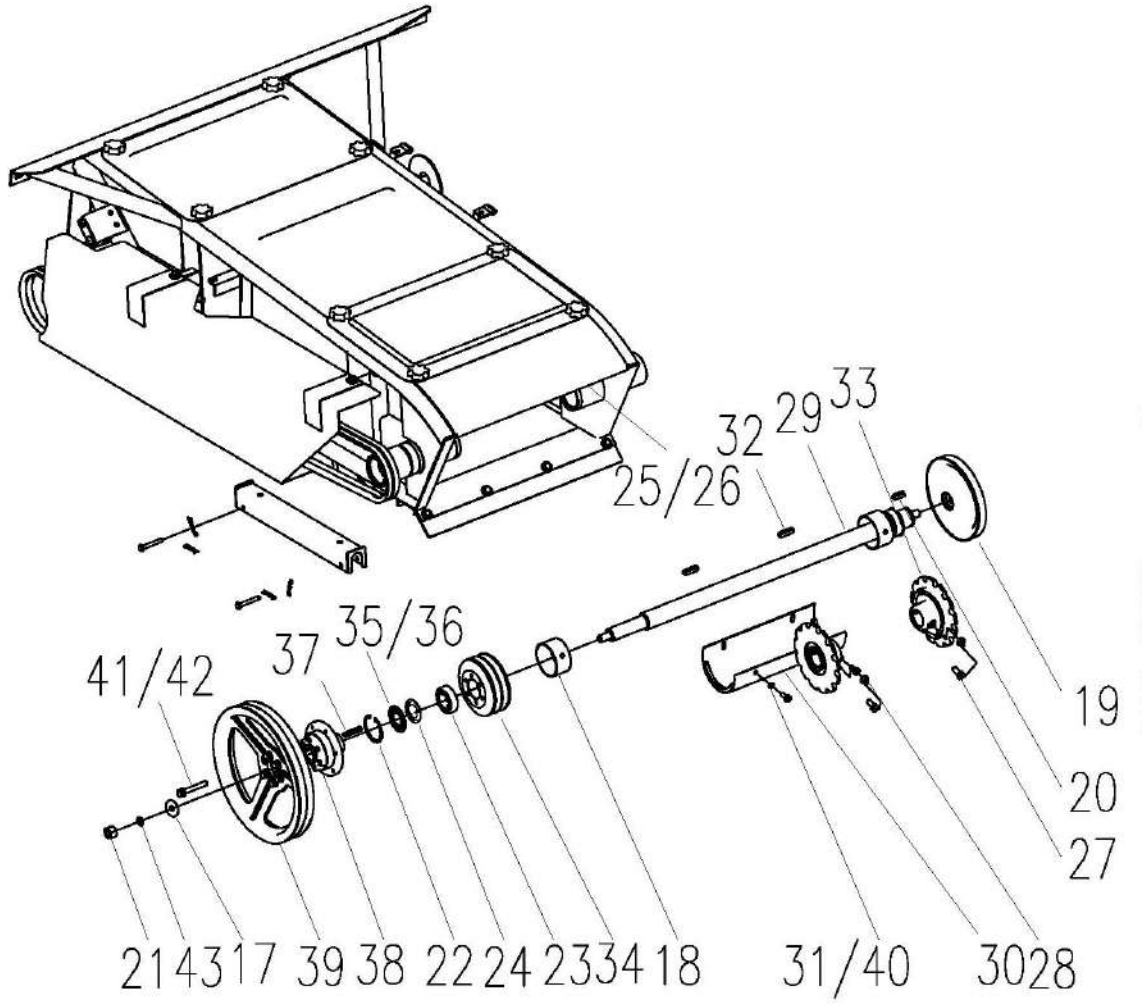

Conveyor Assy W3.5H-01-02-00				
No.	**Description**	**Qty**	**Part Code**	**Remark**
17	Washer 16	2	GB/T93-87	
18	Shaft Sleeve	2	W2.5E-01B-02-40	
19	Driving Wheel, Right	1	W2.5DA-01-02-04-00	
20	Key C8×36	1	GB/T1096-79	
21	Nut M16×1.5	2	GB/T6176-86	
22	Retaining Ring for Hole 62	2	GB/T893.1-86	
23	Bearing 6206-2RS	2	W2.5E-01B-02-16	
24	Dust Proof Washer	2	W2.5-01-02-24	
25	Baffle Plate	2	W2.5E-01B-02-25	
26	Washer 8	10	GB/T96-85	
27	Bolt, Tighten	2	W2.5-01G-02-26	
28	Nut M10×1	2	GB/T6171-86	
29	Upper Shaft	1	W2.5E-01B-02-05Y	
30	Sleeve Weld	2	W2.5E-01B-02-06A-00	Common sleeve optional
31	Bolt M8×20	4	GB/T67-85	Common sleeve optional
32	Key A12×40	2	GB/T1096-79	
33	Chain Wheel, Conveyor	2	W2.5E-01B-02-04Y	Common sleeve optional
34	Driving Wheel B, Header	1	W2.5E-01B-02-07B	Diameter of 137
35	Adjustment Gasket	/	W2.5-02-56-07-22	
36	Plate	/	W2.5-02G-02-10-01-05	
37	Key A8×50	1	GB/T1096-79	
38	Driving Hub, Left	1	W2.5E-01B-02-38X	
39	Belt Pulley, Upper Shaft	1	W2.5E-01B-02-32	
40	Washer 8	4	GB/T97.1-85	Common sleeve optional
41	Bolt M10×70	6	GB/T5782-86	
42	Washer 10	6	GB/T93-87	
43	Retaining Ring	2	W2.5-01-02-12	

Conveyor Assy W3.5H-01-02-00

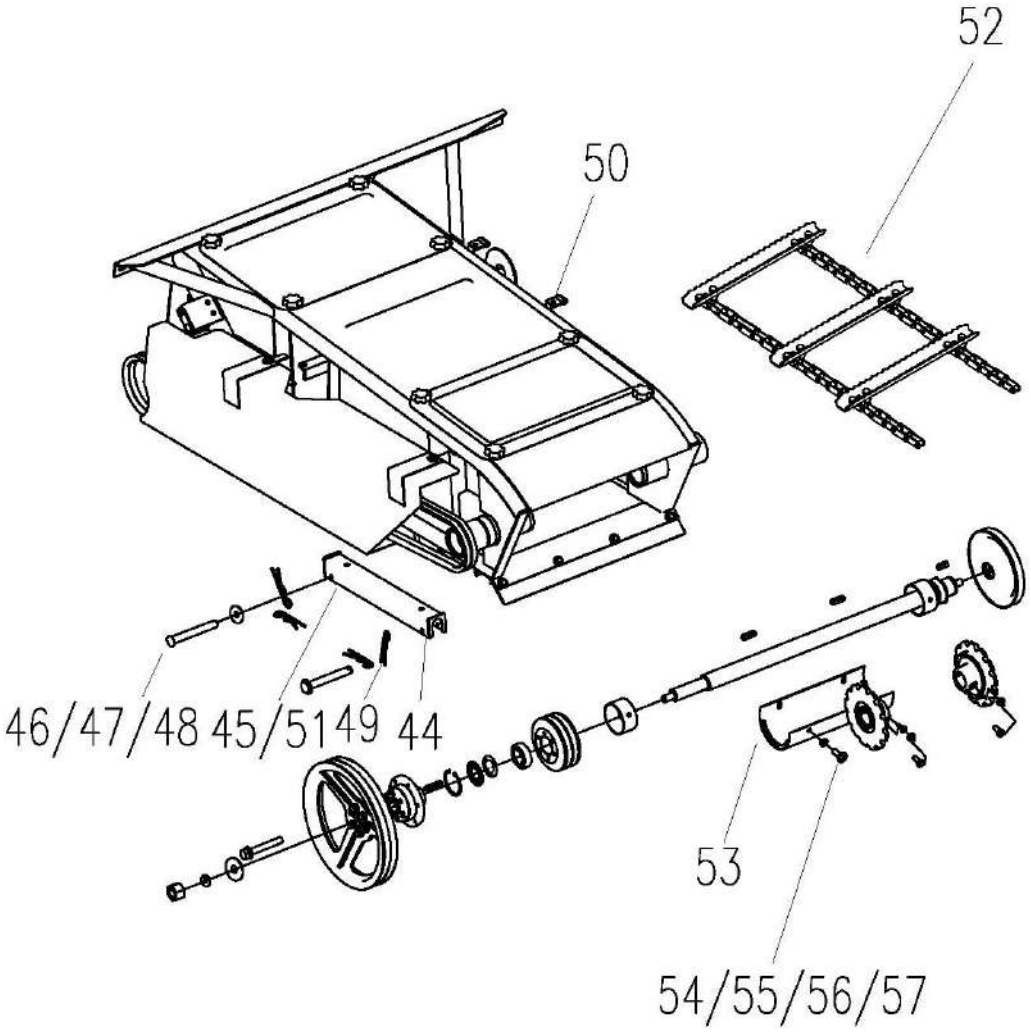

Conveyor Assy W3.5H-01-02-00				
No.	**Description**	**Qty**	**Part Code**	**Remark**
44	Pin	1	XSS46-06	
45	Pin Weld, Oil Cylinder	1	W2.5Y-01M-02-19-00	Optional
46	Pin B16×65	1	GB/T882-86	
47	Pin B16×75	1	GB/T882-86	
48	Washer 16	2	GB/T96-85	
49	Pin 4×30	2	GB/T91-86	
50	Bolt M8×20	14	GB/T5783-86	
51	Pin Weld, Oil Cylinder	1	W2.5Y-01DY-02-19-00	Bold oil cylinder
52	Conveyor Chain Assy	1	W3.5H-01-02-09-00	
53	Sleeve Assy, Upper Shaft	1	W2.5E-01B-02-06B-00	ordinary hanging board
54	Baffle Plate	1	W2.5E-01XCT-02-50	ordinary hanging board
55	Bolt M8X25	1	GB/T5783	ordinary hanging board
56	Washer 8	1	GB/T96	ordinary hanging board
57	Washer 8	1	GB/T93	ordinary hanging board

Conveyor Tension Pulley Assy W2.5E-01M-02S-05-00

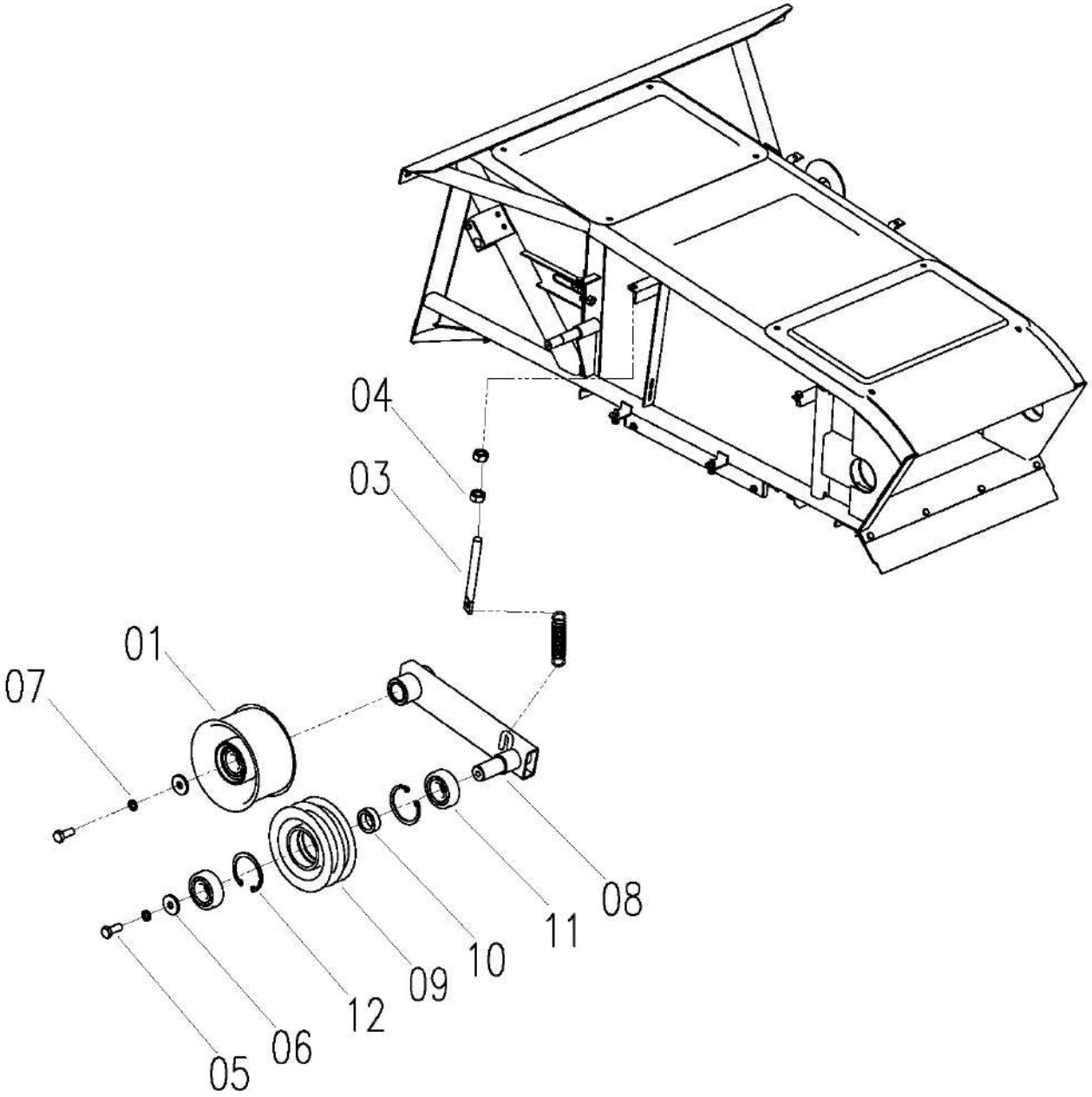

Conveyor Tension Pulley Assy W2.5E-01M-02S-05-00

No.	Description	Qty	Part Code	Remark
01	Tension Pulley Assy	1	W2.5K-02SA-09A-01A-00	
02	Spring	1	W2.0-01-02-05-01	
03	Screw Rod	1	W2.5E-01M-02S-05-05	
04	Nut M10	2	GB/T6170-86	
05	Bolt M8×20	2	GB/T5783-86	
06	Retaining Ring	2	W2.0-02-17-03	
07	Washer 8	2	GB/T93-87	
08	Frame Assy, Tension	1	W2.5E-01M-02S-05-02-00	
09	Tension Pulley	1	W2.0-01-02-05-03	
10	Shaft Sleeve	1	W2.0-02-16-01-03	
11	Bearing 6204-RS	2	GB/T276-94	
12	Circlip for Hole 47	2	GB/T893.1-86	

Driven Wheel Assy W2.5E-01B-02Y-02-00

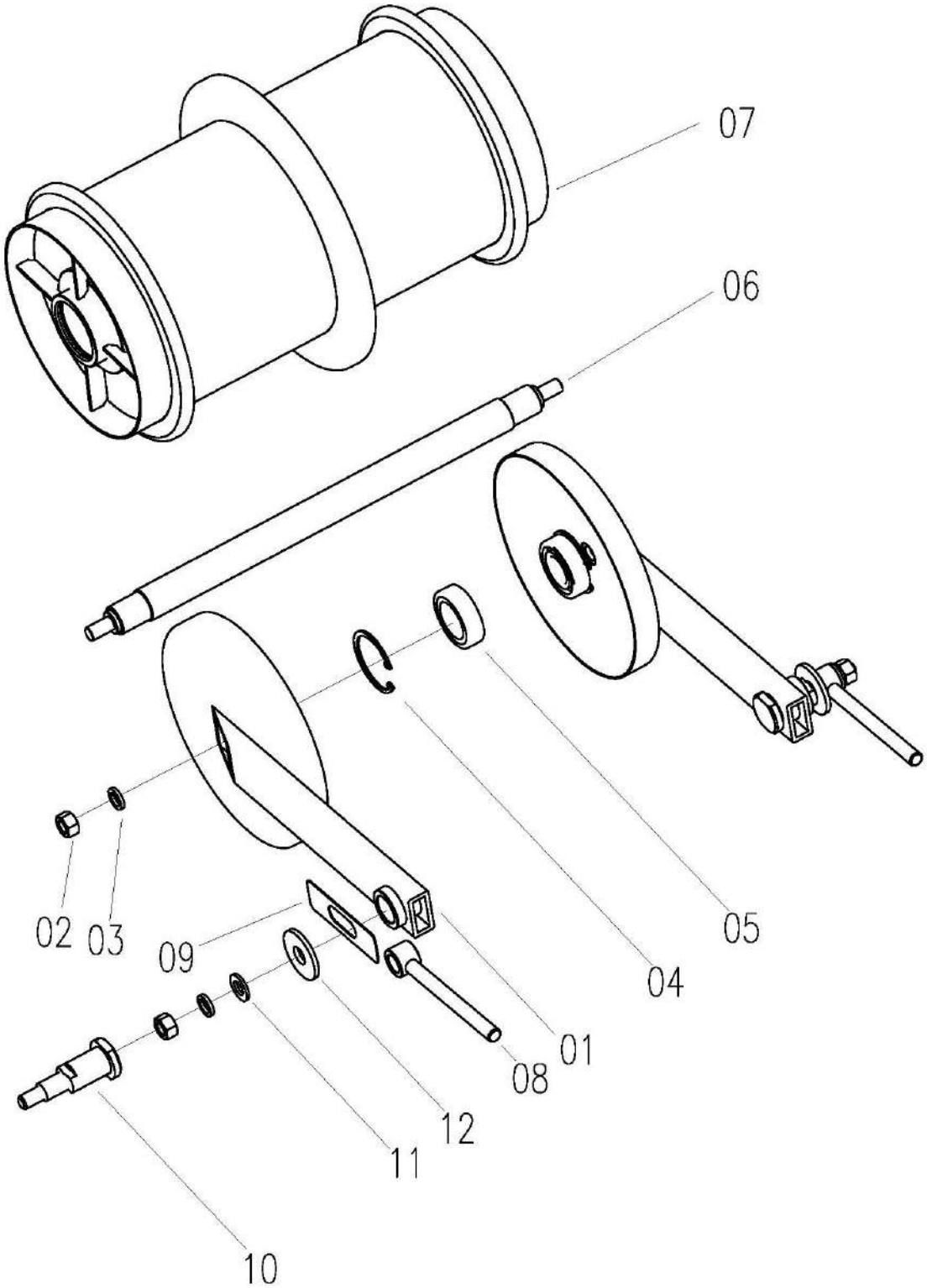

Driven Wheel Assy W2.5E-01B-02Y-02-00				
No.	**Description**	**Qty**	**Part Code**	**Remark**
01	Arm weld	2	W2.5E-01B-02-02-01-00	
02	Bolt M12	8	GB/T6170-86	
03	Washer 12	4	GB/T93-87	
04	Retaining Ring for Hole 52	2	GB/T893.1-86	
05	Bearing6205-2RS	2	W2.5E-01B-02Y-02-07	
06	Passive wheel shaft	1	W2.5E-01B-02-02-02	
07	Passive wheel	1	W2.5E-01B-02-02-03-00	
08	Adjust bolt welding	2	W2.5E-01B-02Y-02-03-00	
09	Leak proof plate	2	W2.5E-01B-02Y-02-06	
10	Short shaft	2	W2.5E-01B-02Y-02-04A	
11	Washer 12	2	GB/T97.1-85	
12	Retaining ring	2	W2.5E-01B-02Y-02-05	

Sleeve Assy, Upper Shaft W2.5E-01B-02-06B-00

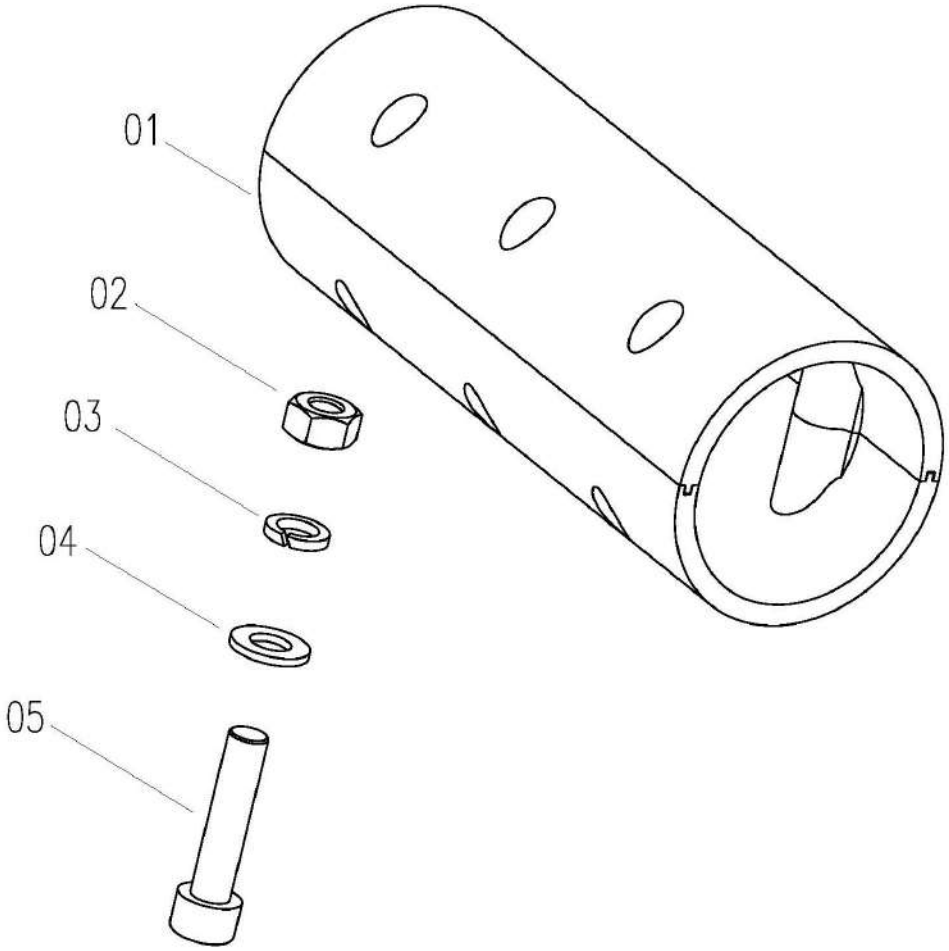

No.	Description	Qty	Part Code	Remark
01	Sleeve, Upper Shaft	2	W2.5E-01B-02-06B-01	
02	Bolt M8	6	GB/T6170	
03	Washer 8	6	GB/T93	
04	Washer 8	6	GB/T97.1	
05	Bolt M8X35	6	GB/T70	