WORLD BRAND SLEF-PROPELLED FULL FEEDING COMBINE HARVESTER

PART CATALOGUE

(**RUILONG SERIES**)

Jiangsu World Agriculture Machinery CO.,LTD

(Version 2019)

Prologue

The World Ruilong series combine harvester was designed and produced by Jiangsu World Agriculture Machinery Co., Ltd. With decades of research, development and practice, this series combine harvester has the characteristics of simple structure, convenient maintenance, high work efficiency, low failure rate, high cleanliness rate of grain and so on. It is suitable for harvesting rice, wheat, corn, soybeans, millet, sunflower seeds and other crops.

This manual is made according to the product drawings of World Ruilong series combine harvester, which can be used by the user to maintain and repair the harvester, select and purchase the spare parts, and can also help the user to understand the internal and external structure of the harvester.

This manual describes the components of the spare parts through illustrations. Each illustration is attached with a detailed parts list with the name and quantity of the parts. About the spare parts code, "GB" is the national standard of China, and "JB" is the standard issued by the former Ministry of Mechanical Industry of China. Therefore, when ordering spare parts, please write down the standard of the spare parts.

When purchasing the spare parts of World Ruilong series combine harvester, please indicate the harvester model, production date and factory number. According to this drawing book, you can find the spare parts name and its code, then describe the spare parts which you need accurately and completely, so that we can better serve you. Please comply with the following requirements to place an order for spare parts:

Page Number + Serial Number + Part Number + Part Name + Quantity

With the development of science and technology and the practical using requirements, the World Ruilong series combine harvester will be continuously improved and perfected, which may cause a little difference between the products and the catalog. Please take the actual object of the harvester product as the standard. If it is unclear, please contact Jiangsu World Agriculture Machinery Co., Ltd. (Tel: +86-0511-8801 2230) or our local dealer. Changes made to the product after its improvement will be revised in new parts catalog. Please understand us if there has no prior notice.

As this book involves a lot of contents, it is inevitable that there are deficiencies. We sincerely hope that our customers will give us your suggestions on product quality, performance and structure in a timely manner, so that we can further improve our products and perfect the using technology.

Jiangsu World Agriculture Machinery Co., Ltd. owns the copyright, change and interpretation rights of this spare parts catalog. No unit or individual may reprint, publish or copy this parts catalog without authorization.

Jiangsu World Agriculture Machinery Co., Ltd.

2019-01-01

Content

No.	Description	Page No.
1	**Header and Conveyor**	1
	Header & Conveyor Assy	2
	Header Assy	4
	Reel Assy	6
	Eccentric Roller Assy and Reel Pulley Assy	8
	Header Auger Assy (Header 2.2m)	10
	Cutter Assy (Header 2.2 m)	14
	Reel Transmission Assy	16
	Blade Driving Assy	20
	Header Transmission Tension Pulley and Chain Tension Pulley Assy	24
	Header Divider Assy , Left & Right	26
	Conveyor Assy	28
	Conveyor Tension Pulley Assy	32
	Conveyor Driven Wheel Assy	34
2	**Thresher Part**	36
	Thresher Assy(Canopy)	37
	Thresher Assy (Cabin)	43
	Threshing Cylinder	49
	Main Tension Assy	51
	Threshing Cover Assy (Round)	53
	Threshing Cover Assy (Adjustable)	55
	Straw Guide Plate	57

NO.	Description	Page No.
	Cover Plate Assy	59
	Double Transmission Gearbox Assy (2SB Type 1465 Belt Only)	61
	Double Transmission Gearbox Assy (SC Type 1496 Belt Only)	65
	Handle Assy	69
	Fan Assy	71
	Impurity Assy	73
	Impurity Lifting Assy	75
	Re-thresher Housing Assy	77
	Horizontal Auger Assy	79
	Impurity Gearbox Assy	81
	Vibration Sieve Assy	83
	Vibration Sieve Assy	85
	Vibration Sieve Assy	87
	Upper Sieve Assy	89
	Rear Sieve Assy	91
	Lower Separating Plate Assy	93
	Tesion Pulley Assy	95
	Main Clutch Tension Assy	97
	Support Frame Assy	99
	Horizontal Grain Auger Assy (Sack Type)	101
	Grain Auger Assy (Grain Tank Type)	104
	Vertical Lifting Auger Assy	107
	Tension Pulley Assy	109

NO.	Description	Page No.
	Tension Chain Wheel Assy	111
	Gearbox Assy	113
3	**Straw Chopper**	115
	Transition Wheel Assy	118
	Tension Assy	120
	Straw Chopper Assy	122
	Tension Frame Assy	124
	Fixed Chopper Assy	126
	Straw Chopper Shaft Assy	128
	Blade Fixing Plate Assy	130
	Rear Plate Assy	132
	Anti-tangle Assy	134
	Straw Separating Plate Assy	136
4	**Chassis**	138
	Chassis Assy (Ruilong Plus, Cabin Type)	139
	Chassis Assy (Ruilong Plus, Canopy，Big Grain Tank)	141
	Chassis Assy (Ruilong Plus, Sack Type)	143
	Gearbox Assy	147
	HST Assy	149
	HST Connector (Canopy Type)	151
	HST Connector (Cabin Type)	153
	Working Tension Pulley Assy	155

NO.	Description	Page No.
	Safety Railing Assy	157
	Pedal Assy (Cabin Type)	159
	Pedal Assy (Canopy)	161
	Support Roller Assy	163
	Balance Roller Assy	165
	Support Roller Assy	167
	Tension Pulley Assy	169
	Middle Support Assy	171
5	**Engine (Sack Type)**	173
	Engine Assy W3.5H-09X-01-00 (Sack Type)	174
	Fuel Tank Assy W2.5DA-03H-04-00SP	176
6	**Engine (Canopy, Grain Tank Type)**	178
	Engine Assy W3.5H-09-01-00SP (Upper Exhaust)	179
	Engine Assy ,102HP, Grain Tank (Lower Exhaust)	183
	Fuel Tank Assy	185
7	**Engine (Cabin Type)**	187
	Engine Assy W3.5H-09F-01-00SP(Upper Exhaust)	188
	Engine Assy W3.5H-09F-01-00(Lower Exhaust)	192
	Radiator Assy (Cabin)	196
	Fuel Tank Assy W2.5DA-03H-04-00SP	198
8	**Hydraulic part (Sack Type)**	200

NO.	Description	Page No.
	Hydraulic Valve Assy W2.5DD-05DX-00 (Sack Type)	201
9	**Hydraulic part (Canopy, Grain Tank Type)**	206
	Hydraulic System W2.5DD-05TC-00(40 Grain Unloading Cylinder)	207
10	**Hydraulic part (Cabin Type)**	212
	Hydraulic Valve Assy W2.5E-05GW-00 (Cabin Type)	213
11	**Operation Part (Canopy Type)**	218
	Operation Assy	219
	Operation Platform Assy	221
	Engine Shield Assy	223
12	**Operation Part (Canopy, Auto Unloading Type)**	225
	Operation Assy	226
	Operation Platform Assy	228
	Main/Auxiliary Shift Handle W3.5H-07D-04-00	230
	Engine Shield Assy W3.5H-07D-06-00	234
13	**Handle Part (Cabin Type)**	236
	Handle Assy (With Cabin) W3.5H-07F-00	237
	Dust Proof Cover Assy W3.5H-07F-06-00	239
	Main/Auxiliary Shift W3.5H-07F-04-00	241
14	**Canopy Part**	245
	Canopy Assy (Big Grain Tank, Canopy)	246
	Canopy Assy (Small Grain Tank, Canopy)	248
15	**Cabin Part**	250

NO.	Description	Page No.
	W3.5H-20-00 Cabin Assy (Air condition Cabin)	251
16	**Lower Blade Part**	255
	Lower Blade Assy	256
	Support Plate Assy	258
	Lower Blade Assy	260
	Upper Blade Assy (2 m)	264
	Blade Assy (2.2 m)	266
	Triangle Swing Arm Assy	268
17	**Grain Tank Part**	270
	Grain Tank Assy (W3.5H-04BX-00, W3.5H-04GX-00)	271
	Grain Unloading Lifting Auger Assy (W3.5H-04BX-02-00)	275
	Unloading Handle Assy (W3.5H-04BX-03-00)	277
	Front Frame Assy (W3.5H-04BX-07-00)	278
	Rear Frame Assy (W3.5H-04BX-09-00)	279
	Support Assy (W3.5H-04GX-06-00)	280
	Lever Assy (W2.5B-04CY-06-00B)	282
	Cover Frame Assy (W2.5B-04BX-08D-00)	283
	Transmission Box Assy (W2.5B-04CY-10B-00)	284
	Cover Assy	286
	Grain Vibrator Assy	287
	360°Auger Assy (W2.5B-04BX-11D-00)	288
	Grain Unloading Upper Housing Assy (W2.5B-04BX-03-00)	290

Ⅰ. Header and Conveyor

Header & Conveyor Assy

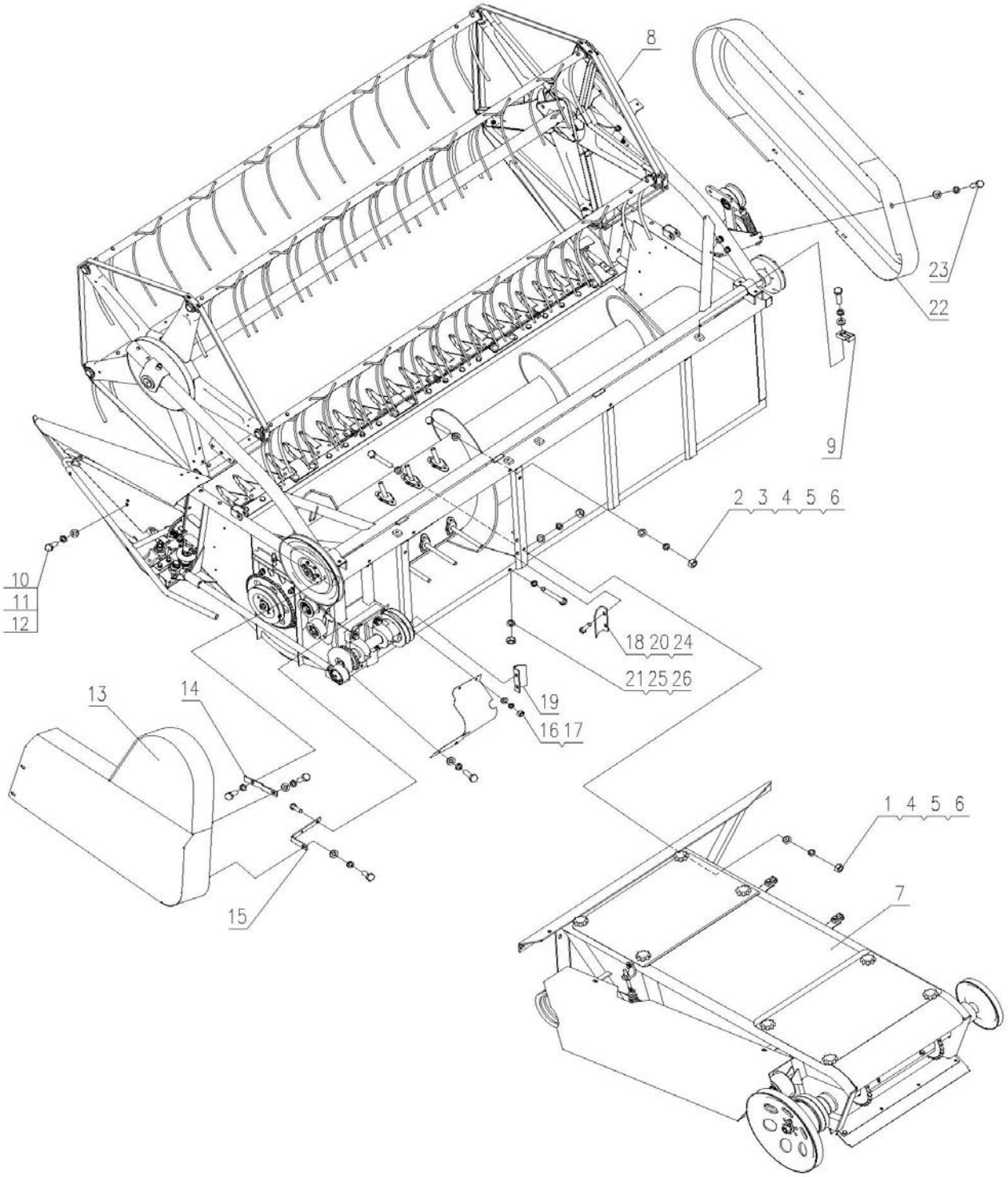

Header & Conveyor Assy

NO.	Description	QTY	Part Code	Note
1	Plate (2)	10	W2.5E-01B-26	
2	Plate (1)	4	W2.5E-01B-25	
3	Bolt M8×55	4	GB/T12-88	
4	Bolt M10×90	5	GB/T5782-86	10.9
5	Washer 10	10	GB/T93-87	
6	Nut M10	10	GB/T6170-86	
7	Conveyor Assy	1	W3.5H-01-02-00	
8	Header Assy (2.2m)	1	W3.5H-01-01-00	
9	Pipe Clamp	8	W2.5E-01B-28	
10	Bolt M8×25	8	GB/T5783-86	
11	Washer 8	16	GB/T97.1-85	
12	Washer 8	31	GB/T93-87	
13	Left Cover, Header	1	W2.0-01-03-00	
14	Upper Frame Weld, Cover	1	W2.0-01-07-00	
15	Rear Frame, Cover	1	W2.5E-01D-08	
16	Nut M8	8	GB/T6170-86	
17	Bolt M8×20	24	GB/T5783-86	
18	Feeding Plate, Right	1	W3.5-01A-12	
19	Feeding Plate, Left	1	W3.5-01A-11	
20	Bolt M8×45	4	GB/T5783-86	
21	Bolt M10×70	4	GB/T5782-86	10.9
22	Right Cover, Header	1	W2.0-01-06-00	
23	Bolt M8×55	2	GB/T5783-86	
24	Washer 8	4	GB/T96-85	
25	Washer 10	4	GB/T97.1-85	
26	Washer 10	4	GB/T96-85	

Header Assy

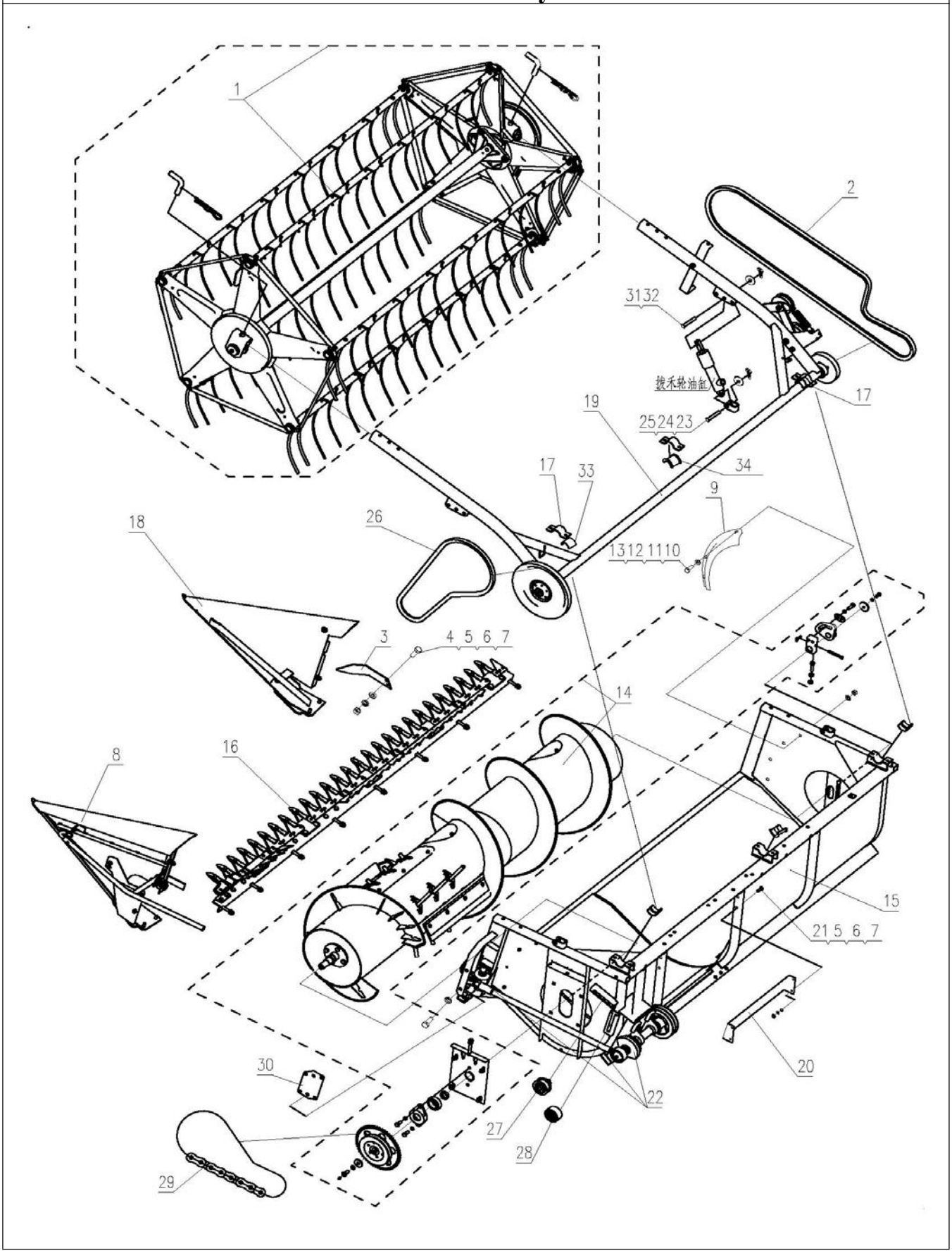
1
2
3132
拨禾轮油缸
17
19
2524 23
34
17
33
9
26
18
1312 1110
3
4 5 6 7
14
8
16
15
21 5 6 7
20
30
22
27
28
29

Header Assy

NO.	Description	QTY	Part Code	Note
1	Reel Assy	1	W3.5-01A-01-05-00	
2	Belt, Reel	1	W2.5E-01B-01-18	
3	Cover, Small	1	W2.5E-01M-01-09	
4	Bolt M8×20	6	GB/T5783-86	
5	Nut M8	6	GB/T6170-86	
6	Washer 8	10	GB/T93-87	
7	Washer 8	16	GB/T97.1-85	
8	Divider Assy ,Left Reel	1	W3.5H-01-01-08-00	
9	Anti-straw Plate, Auger	2	L20.1-05	
10	Bolt M6×16	8	GB/T5783-86	
11	Nut M6	8	GB/T6170-86	
12	Washer 6	8	GB/T93-87	
13	Washer 6	8	GB/T97.1-85	
14	Auger Assy ,Header	1	W2.5E-01D-01-02B-00	
15	Frame Assy ,Header	1	W3.5-01A-01B-01-00	
16	Cutter Assy	1	W2.5E-01H-01-03-00	
17	Press Plate	3	W2.5E-01B-01-20	
18	Divider Assy ,Right Reel	1	W3.5H-01-01-06-00	
19	Transmission Assy ,Reel	1	W2.5E-01D-01-04-00	
20	Baffle Weld	1	W2.5E-01B-01-50-00	
21	Bolt M6×18	3	GB/T5783-86	
22	Driving Assy , Cutting Blade	1	W3.5-01A-01-07-00	
23	Pin Shaft B2×40	2	GB/T882-86	
24	Washer 12	4	GB/T97.1-85	
25	Pin 3.2×28	4	GB/T91-86	
26	Belt, Header Auger	1	W3.5-01A-01-20	
27	Tension Pulley, Transmission Belt	1	W2.0-01-01-10-00	
28	Tension Pulley Assy	1	W2.5E-01B-01-11-00	
29	Chain 08B-1×100	1	GB/T1243.1-83	
30	Connecting Plate Assy	1	W2.0-01-01-12-00	
31	Pin Shaft B10×48	2	GB/T882-86	
32	Washer 10	2	GB/T97.1-85	
33	Nylon Sleeve A	4	W2.5E-01B-01-21	
34	Nylon Sleeve B	2	W2.5E-01B-01-22	

Reel Assy

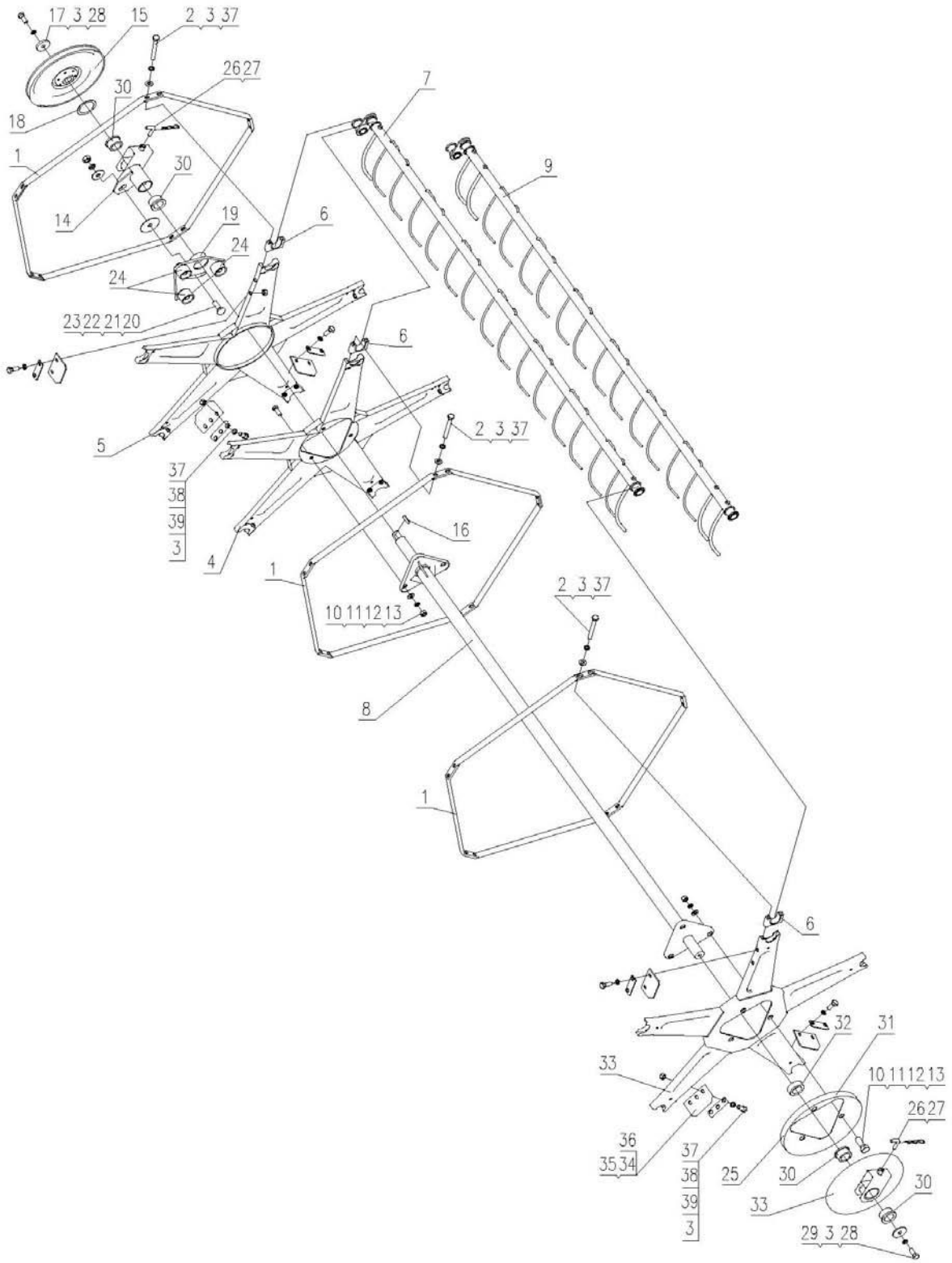
17 3 28
15
2 3 37
26 27
30
18
1
30
14
19
24
24
7
6
9
23 22 21 20
6
5
2 3 37
37
38
39
3
4
16
1
10 11 12 13
2 3 37
8
1
6
32
31
33
10 11 12 13
26 27
36
35 34
37
38
39
3
25
30
33
30
29 3 28

Reel Assy				
NO.	**Description**	**QTY**	**Part Code**	**Note**
1	Stiffened Plate	15	W2.5E-01M-01-05-10	
2	Bolt M8×70	30	GB/T5783-86	
3	Washer 8	48	GB/T93-87	
4	Eccentric Plate Weld	1	W2.5E-01M-01-05-02－00	
5	Plate Weld	1	W2.5E-01M-01-05-01-00	
6	Nylon Seat	15	W2.0B-01B-01-05Q-13	
7	Reel Bar Assy Ⅰ	2	W2.5E-01H-01-05-06-00	
8	Shaft Weld, Middle	1	W2.0B-01B-01-05D-17-00	
9	Reel Bar Assy Ⅱ	3	W2.5E-01H-01-05-15-00	
10	Bolt M12×30	6	GB/T5783-86	
11	Washer 12	6	GB/T97.1-85	
12	Washer 12	6	GB/T93-87	
13	Nut M12	6	GB/T6170-86	
14	Shaft Seat Assy ,Right	1	W2.0B-01B-01-05Q-03-00	
15	Pulley Weld, Reel	1	W2.0-01-01-04-03-00	
16	Key C8×32	1	GB/T1096-79	
17	Retaining Ring	1	L1.8A-01-23-13	
18	Retaining Ring	1	W2.0B-01B-01-05Q-16	
19	Eccentric Plate, Adjusting	1	W2.0B-01B-01-05Q-11-00	
20	Bolt M10×30	1	GB/T12-88	
21	Washer 10, Big	1	GB/T96-85	
22	Washer 10	1	GB/T93-87	
23	Nut M10	1	GB/T6170-86	
24	Eccentric Roller Assy	3	W2.0B-01B-01-05Q-12-00	
25	Anti-straw Plate	1	W2.0B-01B-01-05-08	
26	Hook	2	W.1.2-10	
27	Spring Pin	2	W.1.2-11	
28	Bolt M8×20	2	GB/T5783-86	
29	Retaining Ring	1	WD.1FG.39-06	
30	Sleeve, Wear Protection	4	W.1.2-12	
31	Shaft Seat Weld, Left	1	W2.0B-01B-01-05Q-07-00	
32	Sleeve	1	W2.0B-01B-01-05Q-25	
33	Plate Weld, Left	1	W2.5E-01M-01-05-14-00	
34	Plate, Anti-straw	6	W2.0B-01B-01-05Q-19	
35	Press Plate	6	W2.0B-01B-01-05Q-20	
36	Plate B, Anti-straw	6	W2.0B-01B-01-05Q-21	Tool Box
37	Washer 8	48	GB/T97.1-85	
38	Bolt M8×25	18	GB/T5783-86	
39	Nut M8	18	GB/T6170-86	

Eccentric Roller Assy & Reel Pulley Assy

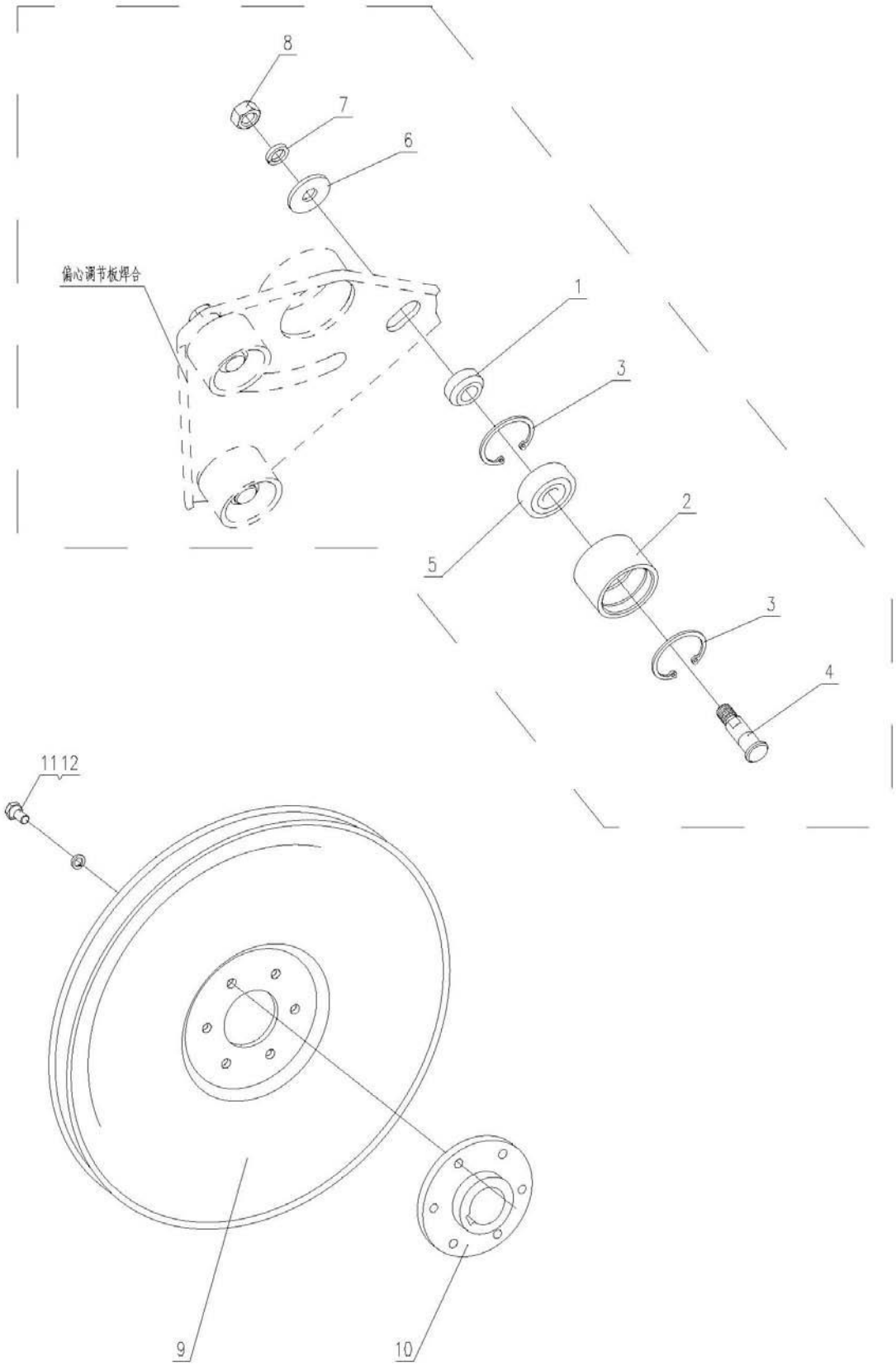

Eccentric Roller Assy & Reel Pulley Assy

NO.	Description	QTY	Part Code	Note
1	Sleeve	1	WD.1E.2-03	
2	Roller	1	W2.0B-01B-01-05Q-12-01	
3	Retaining Ring for Bore	2	GB893.1-86	
4	Roller Shaft	1	WD.1E.2-02	
5	Bearing 6301-2RS	1	GB/T276-94	
6	Washer 10	1	GB/T96-85	
7	Washer 10	1	GB/T93-87	
8	Nut M10	1	GB/T6170-86	
9	Pulley Weld, Stamping	1	L1.8A-01-09-04-01-00	
10	Hub	1	W2.0-01-01-04-03-01	
11	Bolt M6X12	6	GB/T5783-86	
12	Washer 6	6	GB/T93-87	

Header Auger Assy (Header 2.2m)

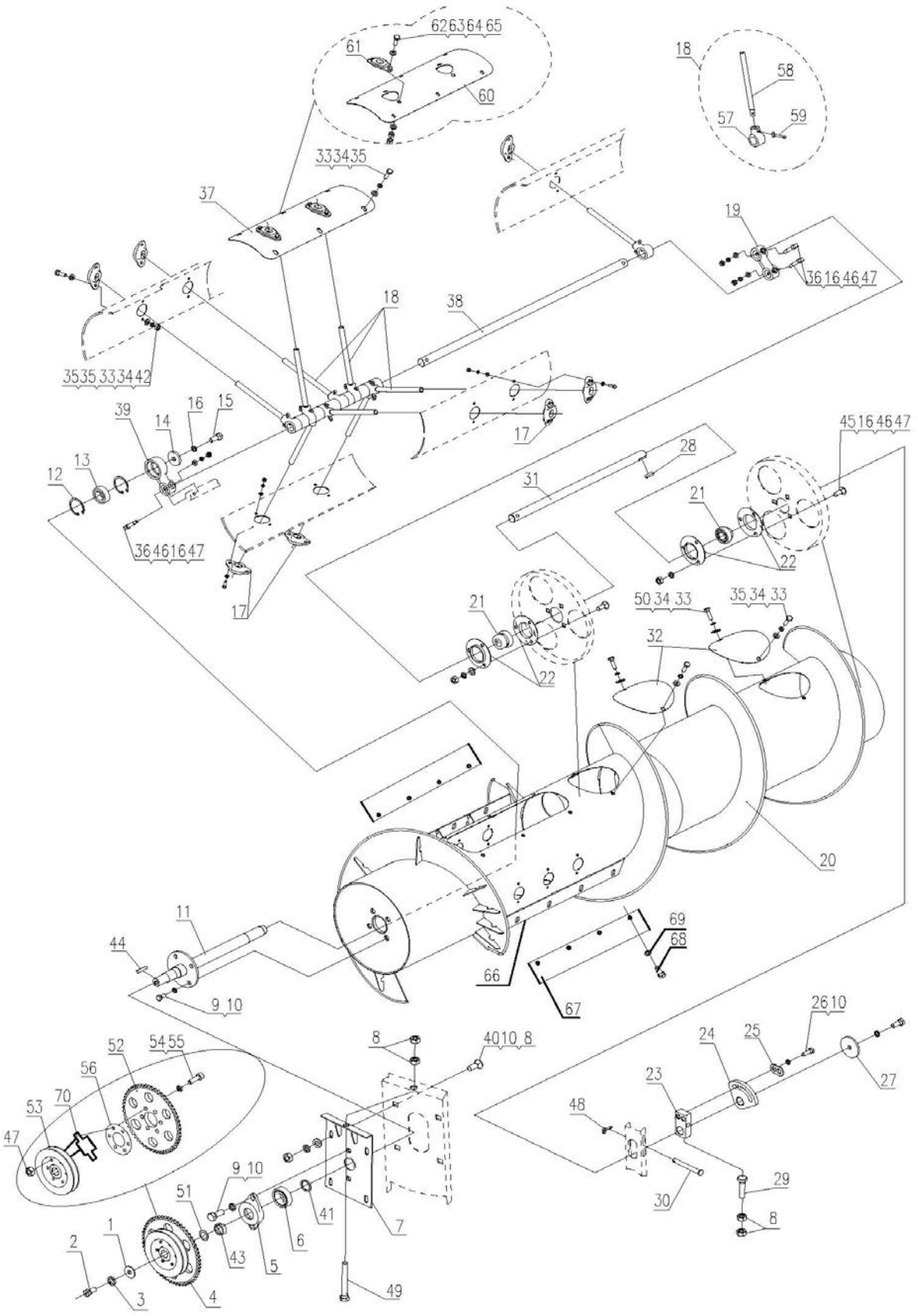

Header Auger Assy (Header 2.2m)

NO.	Description	QTY	Part Code	Note
1	Retaining Ring (2)	1	4L2.2-1.5-24	
2	Bolt M12×25	1	GB/T5783-86	
3	Washer 12	1	GB/T93-87	
4	Pulley Assy	1	W2.5E-01B-01-02-03-00	
5	Bearing Seat, Header Auger	1	W2.0-01-01-02-14	
6	Bearing 6206-2RS	1	W2.5E-01B-01-02A-16	
7	Seat Weld, Adjusting	1	W2.5E-01M-01-02-16-00	
8	Nut M10	6	GB/T6170-86	
9	Bolt M10×25	6	GB/T5783-86	
10	Washer 10	12	GB/T93-87	
11	Active Shaft Weld, Header Auger	1	W2.0B-01B-01-02-03-00	
12	Circlip for Bore, 52	2	GB/T893.1-86	
13	Bearing 6205-2RS	1	GB/T 276-94	
14	Retaining Ring	1	W2.0-02-11-08	
15	Bolt M8×20	2	GB/T5783-86	
16	Washer 8	19	GB/T93-87	
17	Guide Sleeve, Telescopic Teeth	10	W2.0-01-01-02A-11	
18	Telescopic Tooth Assy	13	W2.0-01-01-02A-07-00	
19	Radius Bar	1	W.1.4-06	
20	Header Auger Weld	1	W2.5E-01D-01-02B-01-00	
21	Bearing 90205	2	GB/T3882-87	
22	Bearing Seat CY205	4	GB/T7809-87	
23	Slider, Header Auger	1	WD.1.4-06	
24	Adjustable Slider, Header Auger	1	CL1A.4-07	
25	Press Plate (1)	1	4L2.2-1.5-23	
26	Bolt M10×35	2	GB/T5783-86	
27	Retaining Ring	1	QT004-2009	
28	Key 8×28	1	GB/T1096-79	
29	Bolt M10×40	1	GB/T5783-86	
30	Pin	1	4L2.2-1.5-1	
31	Eccentric Adjusting Shaft	1	W2.5E-01D-01-02A-13	
32	Cover, Observe Hole	3	4LZ2.1.5-10	
33	Bolt M6×20	32	GB/T5783-86	
34	Washer 6	32	GB/T93-87	
35	Washer 6	29	GB/T97.1-85	
36	Pin Shaft	3	4LZ2.1.5-11	
37	Cover Assy , Observe Hole, Long	1	W2.5E-01B-01-02B-02-00	
38	Shaft, Telescopic Teeth	1	W2.5E-01B-01-02A-05	
39	Radius Bar A	1	W2.0-01-01-02-04	

Header Auger Assy (Header 2.2m)

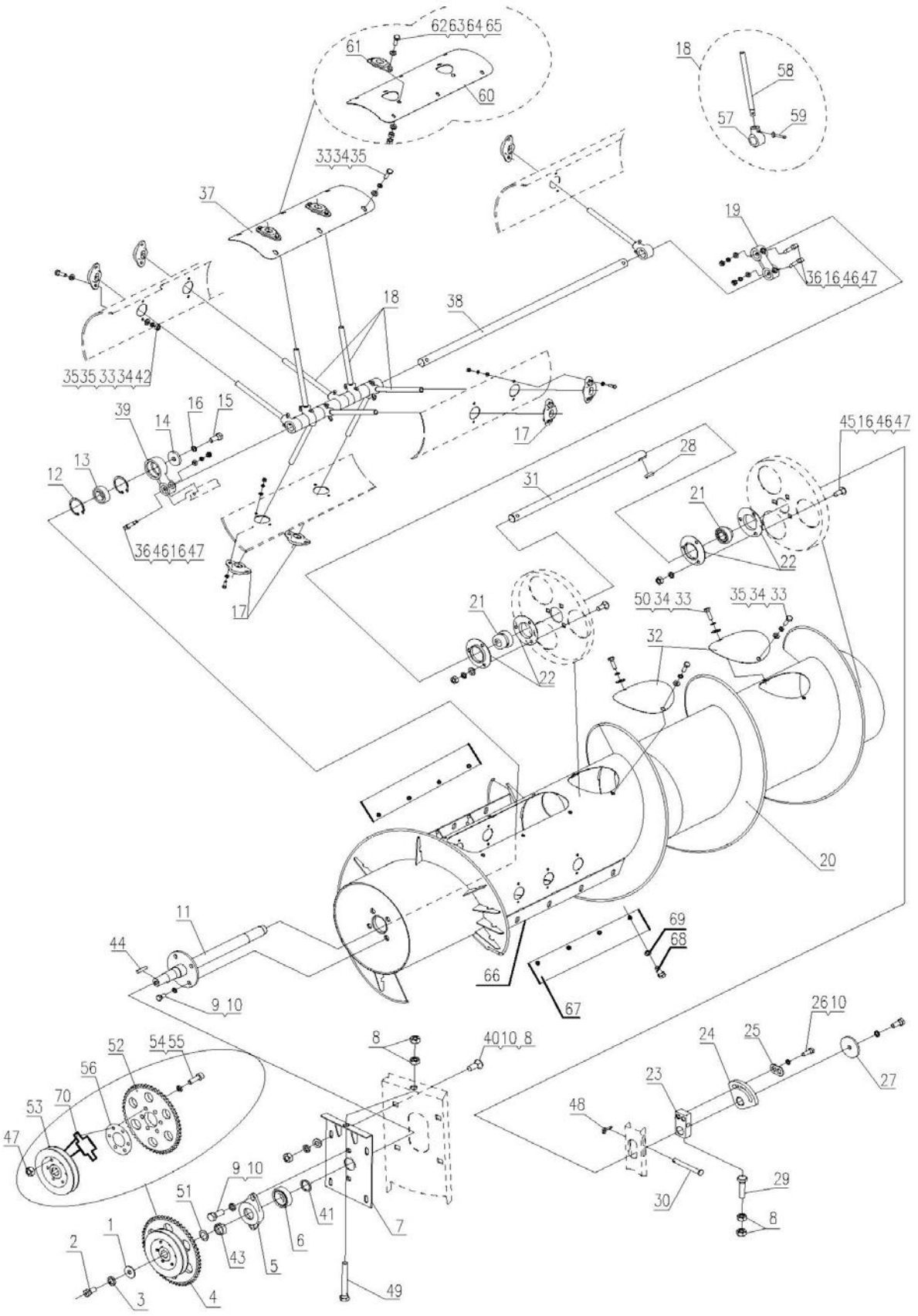

Header Auger Assy (Header 2.2m)

NO.	Description	QTY	Part Code	Note
40	Bolt M10×25	4	GB/T12-88	
41	Plate	1	W2.0-01-01-02-15	
42	Nut M6	20	GB/T6170-86	
43	Sleeve	1	W2.0-01-01-02-12	
44	Key C8×36	1	GB/T1096-79	
45	Bolt M8×20	6	GB/T12-88	
46	Washer 8	6	GB/T97.1-85	
47	Nut M8	25	GB/T6170-86	
48	Pin 3.2×20	1	GB/T91-86	
49	Bolt M10×80	1	GB/T5783-86	
50	Washer 6	3	GB/T96-85	
51	Plate, Adjusting	on demand	W2.0-01-01-04G-10	
52	Chain wheel	1	W2.0-01-01-02G-01-01	
53	Pulley	1	W2.5E-01B-01-02-03-02	
54	Bolt M8×25	6	GB/T70-85	
55	Washer 8	6	GB/T93-87	
56	Plate, Adjusting	on demand	W2.0-01-01-02G-01-03	
57	Seat, Telescopic Teeth	1	W2.0-01-01-02-07-01	
58	Rod, Telescopic Teeth	1	W2.0-01-01-02A-07-02	
59	Pin 5×45	1	GB/T1220-84	
60	Cover, Observe Hole, Long	1	W2.5E-01B-01-02B-02-01	
61	Guide Sleeve,Telescopic Teeth	3	W2.0-01-01-02A-11	
62	Bolt M6×20	6	GB/T5781-86	
63	Washer 6	6	GB/T97.1-85	
64	Nut M6	6	GB/T6170-86	
65	Washer 6	6	GB/T93-87	
66	Plate	2	W2.5E-01B-01-02C-19	Tool Box
67	Press Plate	2	W2.5E-01B-01-02C-21	
68	Bolt M8×25	10	GB/T5783-86	
69	Washer 8	10	GB/T96-85	
70	Hub	1	W2.5E-01B-01-02-03-01	

Cutter Assy (Header 2.2 m)

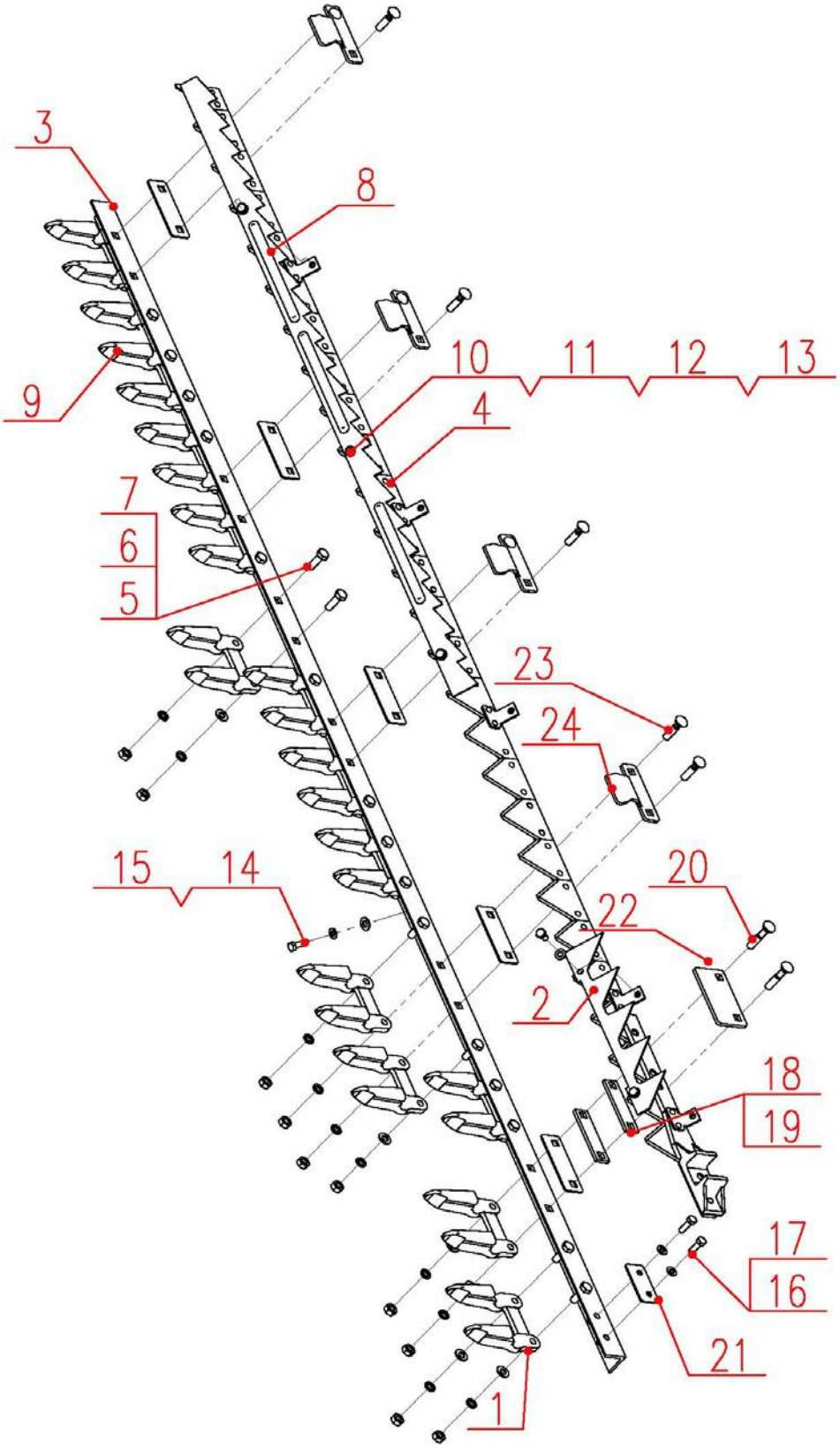

Cutter Assy(Header 2.2 m)

NO.	Description	QTY	Part Code	Note
1	Blade Guide A	1	W2.0-01-01-03G-01	
2	Conveyor Teeth, Left	1	W2.0-01-01-03G-18	
3	Bar, Blade Fixed	1	W2.0B-01B-01-03G-02	
4	Cutter Bar Assy , Blade Fixed	1	W2.5E-01D-01-03-03-00A	
5	Bolt M10×30	18	GB/T12-88	
6	Washer 10	37	GB/T93-87	
7	Nut M10	30	GB/T6170-86	
8	Conveyor Teeth, Right	1	W2.5E-01D-01-03-01	
9	Blade Guide B	14	W2.0-01-01-03G-04	
10	Bolt M8×18	5	GB/T5783-86	
11	Washer 8	9	GB/T97.1-85	
12	Washer 8	7	GB/T93-87	
13	Nut M8	7	GB/T6170-86	
14	Washer 10	7	GB/T96-85	
15	Bolt M10×25	7	GB/T5783-86	
16	Bolt M8×20	2	GB/T5783-86	
17	Friction Plate	1	W2.0-01-01-03G-06	
18	Plate	2	W2.0-01-01-03-05	
19	Plate, Adjusting		W2.0-01-01-03G-07	
20	Bolt M10×50	2	GB/T12-88	
21	Friction Plate	6	W2.0-01-01-03G-08	
22	Press Plate	1	W2.0-01-01-03G-09	
23	Bolt M10×35	10	GB/T12-88	
24	Plate, Blade Pressed	5	W2.0-01-01-03G-10	

Reel Transmission Assy

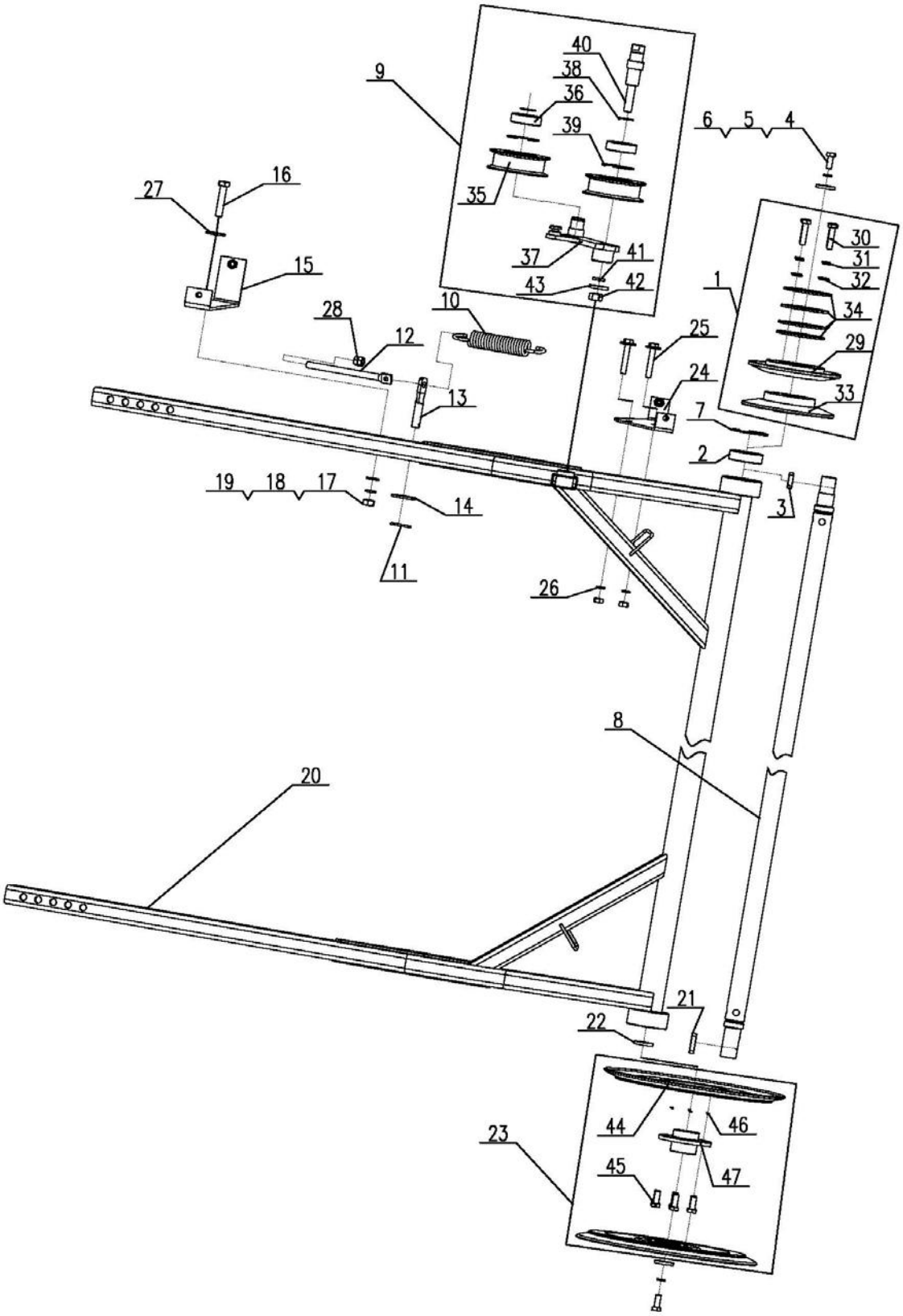

Reel Transmission Assy				
NO.	**Description**	**QTY**	**Part Code**	**Note**
1	Reel Pulley Assy ,Speed Changing	1	W2.0-01-01-04G-01-00	
2	Bearing 6205-2RS	2	GB/T276-94	
3	Key C8×25	1	GB/T1096-79	
4	Bolt M8×20	2	GB/T5783-86	
5	Washer 8	4	GB/T93-87	
6	Retaining Ring	2	W2.0-02-11-08	
7	Circlip for Bore, 52	2	GB/T893.1-86	
8	Shaft Weld, Frame	1	W2.0-01-01-04-04-00	
9	Tension Arm Assy	1	W2.5E-01B-01-04-08-00	
10	Spring	1	W2.5E-01B-01-04-09	
11	Pin	1	XSS46-06	
12	Screw Rod	1	W2.5E-01B-01-04-05A	
13	Shaft	1	W2.5E-01B-01-04-03	
14	Washer 12	1	GB/T96-85	
15	Fixed Seat Weld, Front	1	W2.5E-01B-01-04-03-00	
16	Bolt M10×50	1	GB/T5782-86	
17	Washer 10	1	GB/T97.1-85	
18	Washer 10	1	GB/T93-87	
19	Nut M10	1	GB/T6170-86	
20	Frame Assy ,Support	1	W2.5E-01D-01-04-02-00	
21	Key C8×32	1	GB/T1096-79	
22	Plate, Adjusting	on demand	W2.0-01-01-04G-10	
23	Reel Pulley	1	W2.0-01-01-04-03-00	
24	Fixed Seat Weld, Rear	1	W2.5E-01B-01-04-04-00	
25	Bolt M8×50	2	GB/T5782-86	
26	Washer 8	2	GB/T96-85	
27	Washer 10	1	GB/T96-85	
28	Nut M8	2	GB/T6170-86	
29	Auxiliary Shift Plate	1	W2.0-01-01-04G-01-01	
30	Bolt M8×35	4	GB/T5783-86	
31	Washer M8	4	GB/T93-87	
32	Washer M8	4	GB/T97.1-85	
33	Fixed Plate	1	W2.0-01-01-04G-01-02G	
34	Plate, Adjusting	4	W2.0-01-01-04G-01-03	
35	Tension Pulley, Movable	2	W2.0-01-01-04G-07-02	
36	Bearing 6204-2RS	2	GB/T276-94	
37	Tension Arm Weld	1	W2.5E-01B-01-04-08A-01-00	
38	Circlip for Shaft, 20	2	GB/T894.2-86	
39	Circlip for Bore, 47	2	GB/T893.1-86	

Reel Transmission Assy

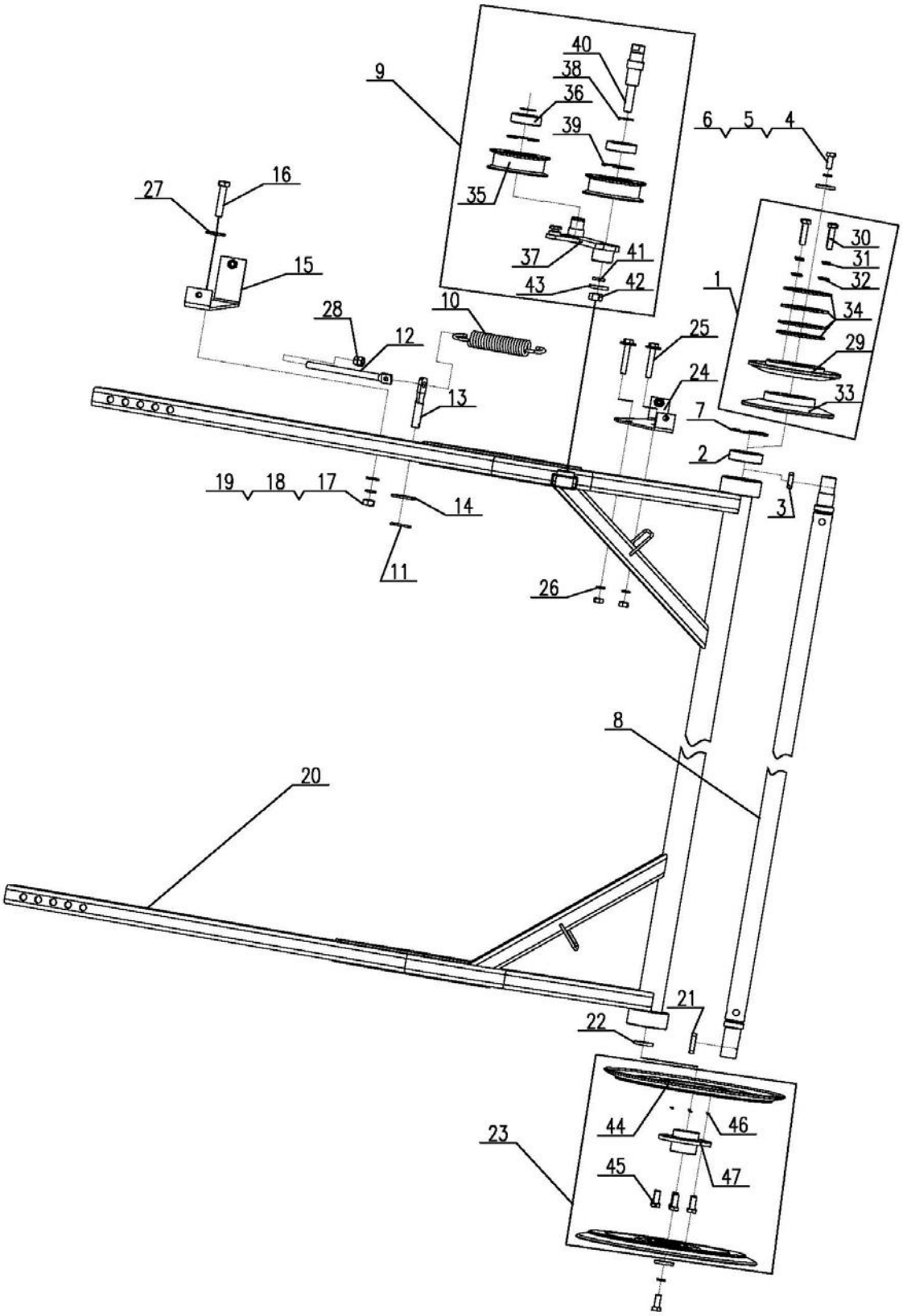

Reel Transmission Assy

NO.	Description	QTY	Part Code	Note
40	Shaft	1	W2.5E-01B-01-04-08A-02	
41	Washer 12	1	GB/T93-87	
42	Nut M12	1	GB/T6170-86	
43	Washer 12	1	GB/T97.1-85	
44	Pulley Weld, Stamping	1	L1.8A-01-09-04-01-00	
45	Bolt M6X12	6	GB/T5783-86	
46	Washer 6	6	GB/T93-87	
47	Hub	1	W2.0-01-01-04-03-01	

Blade Driving Assy

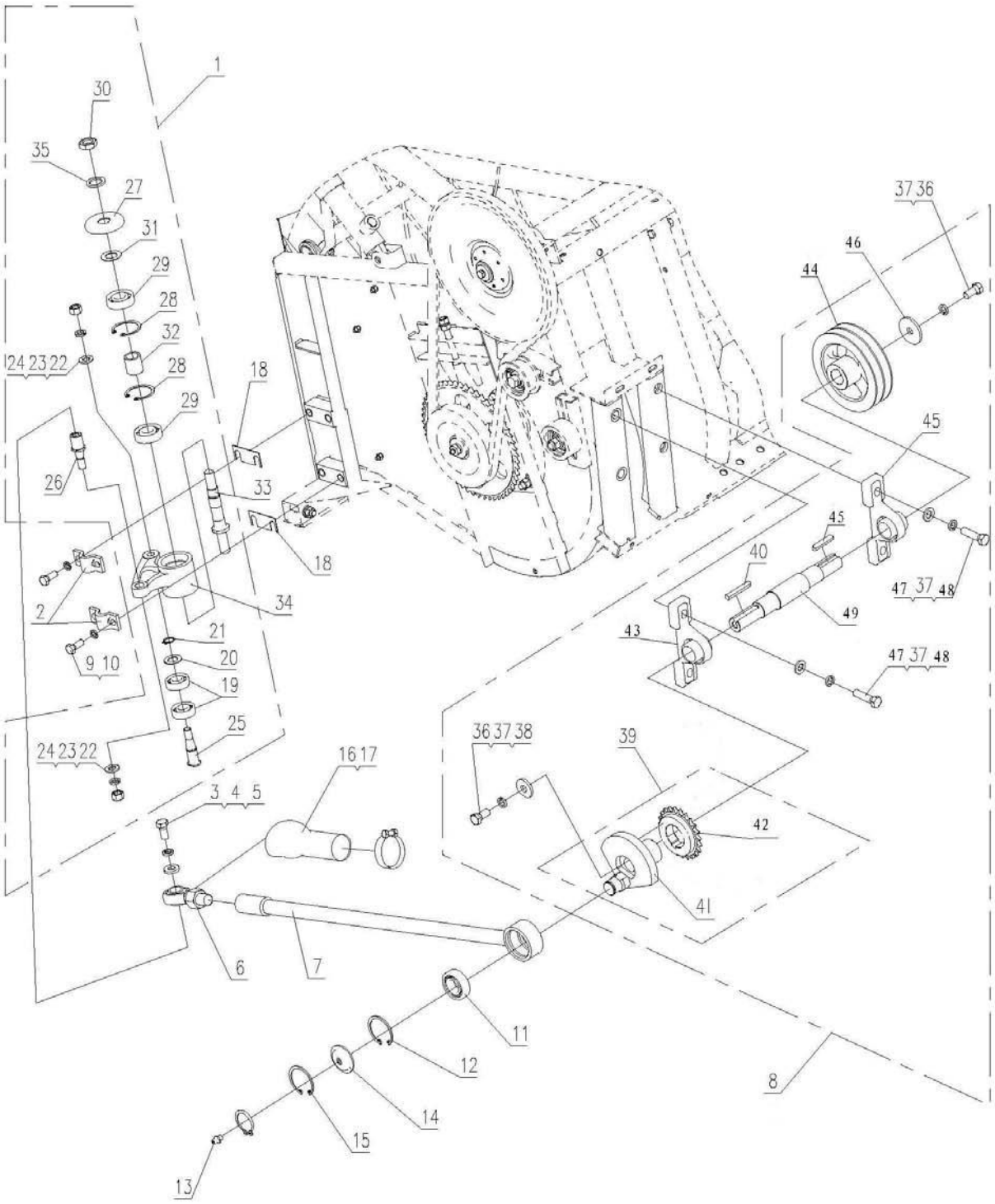

Blade Driving Assy				
NO.	**Description**	**QTY**	**Part Code**	**Note**
1	Swing Rod Assy ,Upper Blade	1	W2.0-01-01-07-01-00	
2	Press Plate	2	W2.0-01-01-07-03	
3	Bolt M12×25	1	GB/T5783-86	
4	Washer 12	1	GB/T93-87	
5	Press Plate (II)	1	W2.0-01-01-07-04	
6	Bearing	1	W2.0-01-01-07-05-00	
7	Joint Bar Weld, Upper Blade	1	W2.0-01-01-07-06-00	
8	Swing Rod Assy	1	W3.5-01A-01-07-02-00	
9	Bolt M10×30	4	GB/T5783-86	
10	Washer 10	4	GB/T93-87	
11	Bearing 1205	1	W2.0-01-01-07-12	
12	Circlip for Bore 52	2	GB/T893.1-86	
13	Oil Cup M6	1	GB/T1152-89	
14	Dust Proof cover	1	W2.0-01-01-07-07	
15	Circlip for Shaft, 25	1	GB/T894.2-86	
16	Sleeve	1	W.1.5B-08	
17	Throat Hoop ø25-40	1	JB/T8870-1999	
18	Plate, Adjusting	on demand	W2.0-01-01-07-08	
19	Bearing 6203-2RS	2	W2.0-01-01-07-01-10	
20	Mud Proof Cover	1	W2.0-01-01-07-01-08	
21	Circlip for Shaft 17	1	GB/T894.2-86	
22	Washer 12	2	GB/T93-87	
23	Washer 12	2	GB/T97.1-85	
24	Nut 12	2	GB/T6170-86	
25	Pin Shaft	1	W2.0-01-01-07-01-09	
26	Shaft	1	W2.0-01-01-07-01-03	
27	Dust Proof cover	1	W2.0-01-01-07-01-04	
28	Circlip for Bore 47	2	GB/T893.1-86	
29	Bearing 6204-RS	2	GB/T276-94	
30	Nut M18X1.5	1	GB6173-86	
31	Middle Gasket	1	W2.0-01-01-07-01-05	
32	Sleeve	1	W2.0-01-01-07-01-06	
33	Swing Shaft	1	W2.0-01-01-07-01-01	
34	Swing Rod, Upper Blade	1	W2.0-01-01-07-01-02	
35	Sleeve	1	W2.0-01-01-07-01-07	
36	Bolt M12×25	2	GB/T5783-86	
37	Washer 12	6	GB/T93-87	
38	Press Plate	1	W2.0-01-01-07-02-01	
39	Eccentric Crank Weld	1	W2.5E-01B-01-07-02-02A-00	

Blade Driving Assy

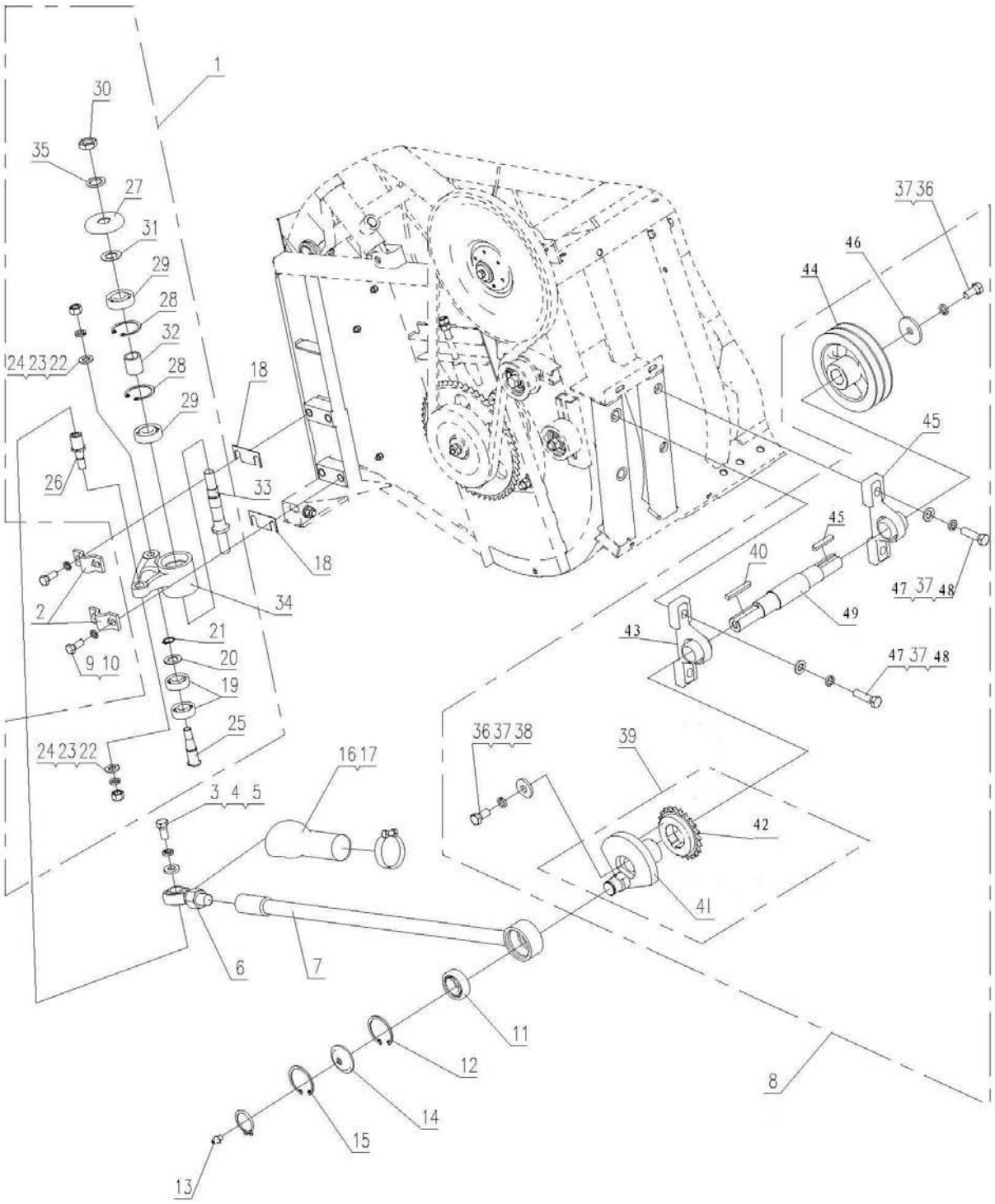

Blade Driving Assy

NO.	Description	QTY	Part Code	Note
40	Key A8×45	1	GB/T1096-79	
41	Crank Seat	1	W2.5E-01B-01-07-02-02A-01	
42	Transmission Chain Wheel	1	W2.5E-01B-01-07-02-02A-02	
43	Bearing UCP206	2	W2.0-01-01-07-02-08	
44	Driven Pulley, Conveyor	1	W2.0-01-01-07-02-03	
45	Key C8×40	1	GB/T1096-79	
46	Press Plate	1	W2.0-01-01-07-02-04	
47	Bolt M12×40	4	GB/T5783-86	
48	Washer 12	4	GB/T97.1-85	
49	Shaft, Swing Rod	1	W2.5E-01D-01-07-02-05A	
50	Sleeve	1	W2.5E-01H-01-07-02-01	

Header Transmission Tension Pulley and Chain Tension Pulley Assy

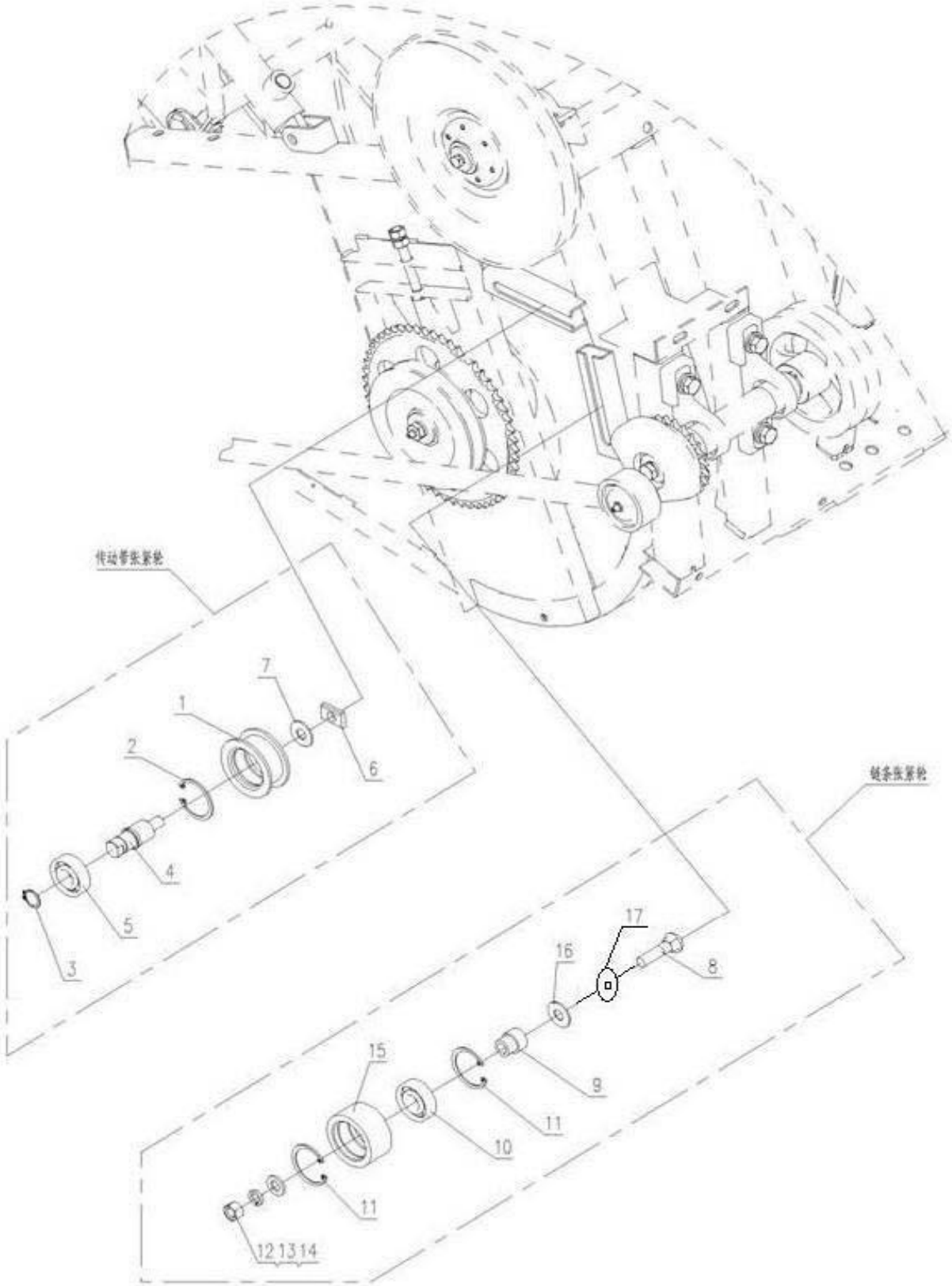

Header Transmission Tension Pulley and Chain Tension Pulley Assy

NO.	Description	QTY	Part Code	Note
1	Tension Pulley	1	W2.0-01-01-04-07-02	
2	Circlip for Bore 47	1	GB/T893.1-86	
3	Circlip for Shaft 20	1	GB/T894.2-86	
4	Shaft, Tension Pulley	1	W2.0-01-01-10-01	
5	Bearing 6204-2RS	1	GB/T276-94	
6	Nut	1	W2.0-01-01-10-02	
7	Plate, Adjusting	on demand	W.1.13-02	
8	Bolt M12×50	1	GB/T12-88	
9	Sleeve	1	W2.5E-01B-01-11-02	
10	Bearing 6204-2RS	1	GB/T276-94	
11	Retaining Ring for Bore 47	2	GB/T893.1-86	
12	Nut M12	1	GB/T6170-86	
13	Washer 12	1	GB/T93-87	
14	Washer 12	1	GB/T97.1-85	
15	Nylon Tension Pulley	1	WD.1F.33-02	
16	Plate, Adjusting	on demand	W2.0-01-01-11-03	
17	Gasket	1	W2.5E-01B-01-11-03	

Header Divider Assy , Left & Right

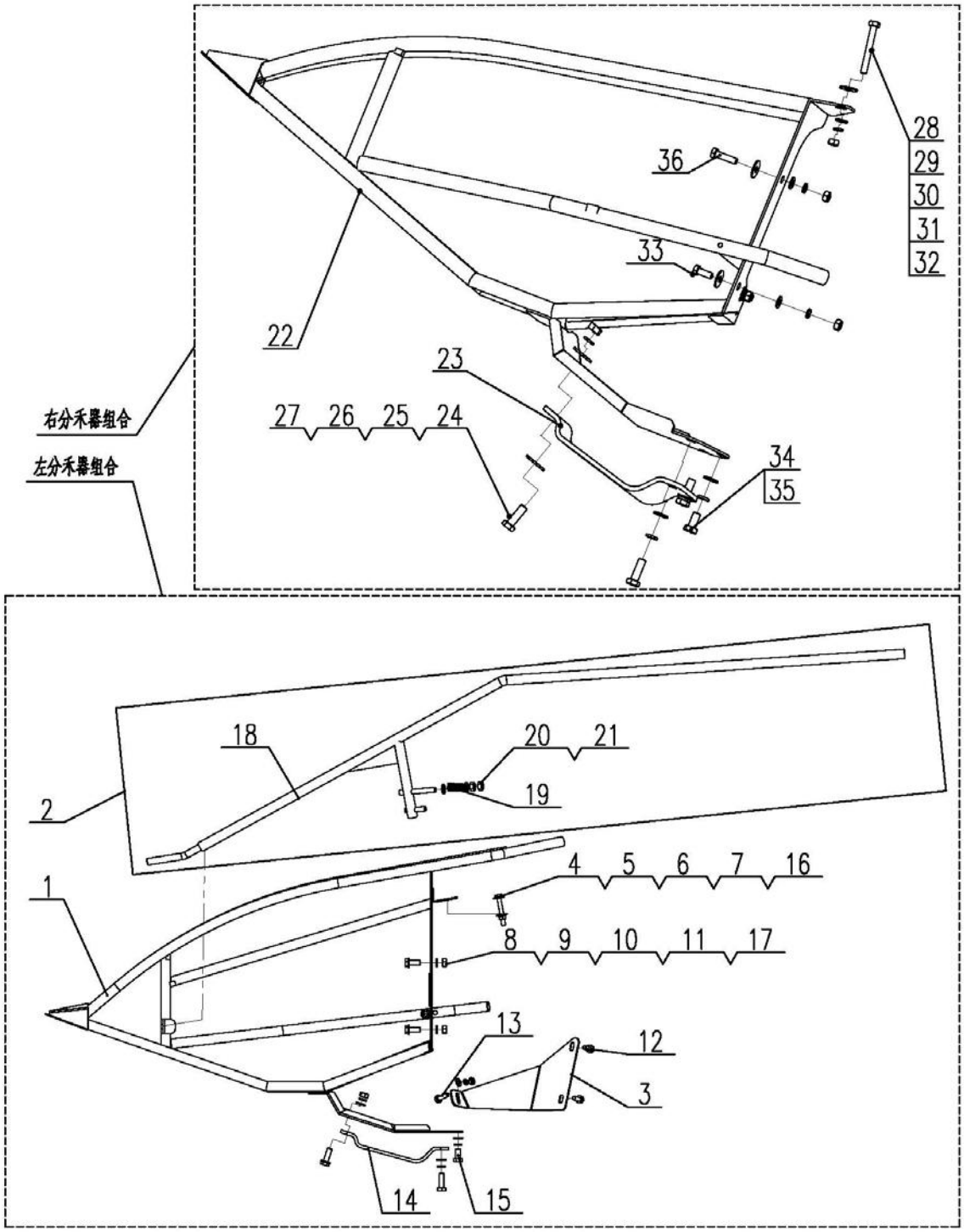

Header Divider Assy , Left & Right

NO.	Description	QTY	Part Code	Note
1	Divider Weld, Left	1	W2.5E-01M-01-08E-01-00	
2	Divider Pipe Assy , Movable	1	W2.5E-01M-01-08X-03A-00	
3	Baffle Plate	1	W2.5E-01M-01-08-02A	
4	Bolt M8X65	1	GB/T5783-86	
5	Washer 8	3	GB/T96-85	
6	Washer 8	6	GB/T93-87	
7	Nut M8	2	GB/T6170-86	
8	Bolt M10X30	5	GB/T5783-86	
9	Washer 10	8	GB/T93-87	
10	Washer 10	5	GB/T97.1-85	
11	Nut M10	3	GB/T6170-86	
12	Bolt M8X20	2	GB/T5783-86	
13	Bolt M8X30	1	GB/T5783-86	
14	Support Plate	1	W3.5H-01-01-06-02	
15	Bolt M10X20	1	GB/T5783-86	
16	Washer M8	3	GB/T97.1-85	
17	Washer M10	4	GB/T96-85	
18	Divider Pipe Assy , Movable	1	W2.5E-01M-01-08X-03A-01-00	
19	Spring	1	L20.1.2-01	
20	Nut M10	2	GB/T6170-86	
21	Washer 10	2	GB/T97.1-85	
22	Divider Weld, Right	1	W2.5E-01M-01-06E-01-00	
23	Support Plate	1	W3.5H-01-01-06-02	
24	Bolt M10X30	3	GB/T5783-86	
25	Washer 10	4	GB/T93-87	
26	Washer 10	2	GB/T96-85	
27	Nut M10	1	GB/T6170-86	
28	Bolt M8X65	1	GB/T5782-86	
29	Washer 8	4	GB/T96-85	
30	Washer 8	8	GB/T93-87	
31	Nut M8	4	GB/T6170-86	
32	Washer 8	4	GB/T97.1-86	
33	Bolt M8X25	2	GB/T5783-86	
34	Bolt M10X20	1	GB/T5783-86	
35	Washer 10	3	GB/T97.1-86	
36	Bolt M8X30	1	GB/T5783-86	

Conveyor Assy

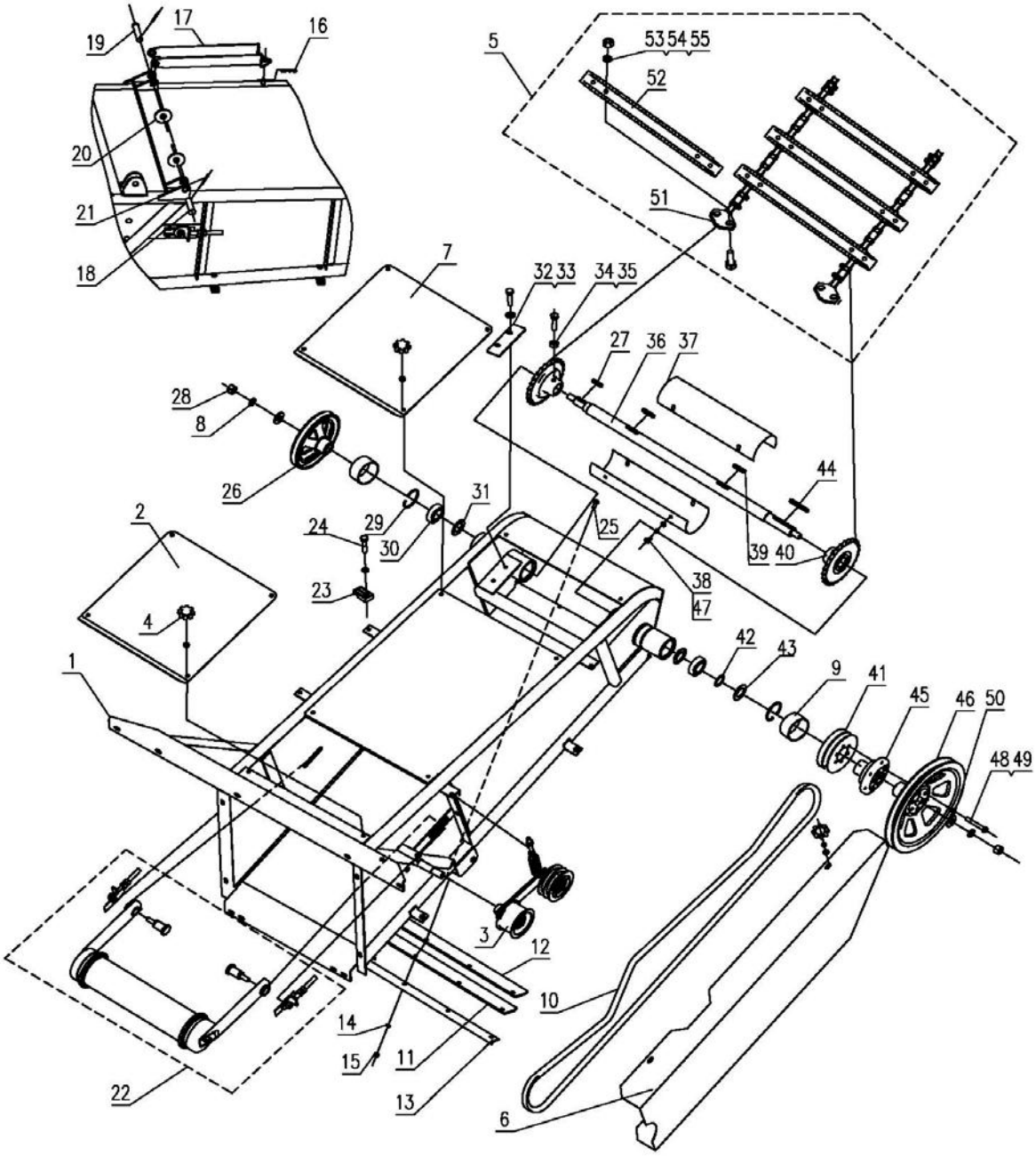

Conveyor Assy

NO.	Description	QTY	Part Code	Note
1	Conveyor Weld	1	W3.5H-01-02-01-00	
2	Upper Cover	1	W2.5E-01B-02-03A	
3	Tension Pulley Assy	1	W2.5E-01M-02S-05-00	
4	Bolt	8	W2.5E-01B-02-37	
5	Conveyor Chain Assy	1	W3.5-01A-02-09-00	
6	Cover Weld	1	W3.5H-01-02-10-00	
7	Upper Cover B	1	W2.5E-01B-02Y-08	
8	Washer 16	2	GB/T93-87	
9	Shaft Sleeve	2	W2.5E-01B-02-40	
10	Belt, Conveyor	2	W3.5H-01-02-11	
11	Canvas	1	W2.5-01-02-17	
12	Long Canvas	1	W2.5E-01B-02-12	
13	Press Plate	1	W2.5-01-02-18	
14	Washer 8	20	GB/T93-87	
15	Nut M8	4	GB/T6170-86	
16	Pin	1	XSS46-06	
17	Lock Assy ,Oil Cylinder	1	W2.5E-01-02-19-00	
18	Pin Shaft B16×65	1	GB/T882-86	
19	Pin Shaft B16×75	1	GB/T882-86	
20	Washer 16	2	GB/T96-85	
21	Pin 4×30	2	GB/T91-86	
22	Driven Wheel Assy	1	W2.5E-01B-02Y-02-00	
23	Hose Clamp	4	W2.5E-01B-28	
24	Bolt M8×20	12	GB/T5783-86	
25	Bolt M8×25	4	GB/T5783-86	
26	Driving Wheel, Right	1	W2.5DA-01-02-04-00	
27	Key C8×36	1	GB/T1096-79	
28	Nut M16×1.5	2	GB/T6176-86	
29	Retaining Ring for Bore	2	GB/T893.1-86	
30	Bearing 6206-2RS	2	W2.5E-01B-02-16	
31	Dust Proof Washer	2	W2.5-01-02-24	
32	Baffle Plate	2	W2.5E-01B-02-25	
33	Washer ,Plain, Big, 8	8	GB/T96-85	
34	Bolt, Tighten	2	W2.5-01G-02-26	
35	Nut M10×1	2	GB/T6173-86	
36	Upper Shaft	1	W2.5E-01B-02-05Y	
37	Sleeve Weld	2	W2.5E-01B-02-06-00	
38	Bolt M8×16	4	GB/T67-85	
39	Key A12×40	2	GB/T1096-79	

Conveyor Assy

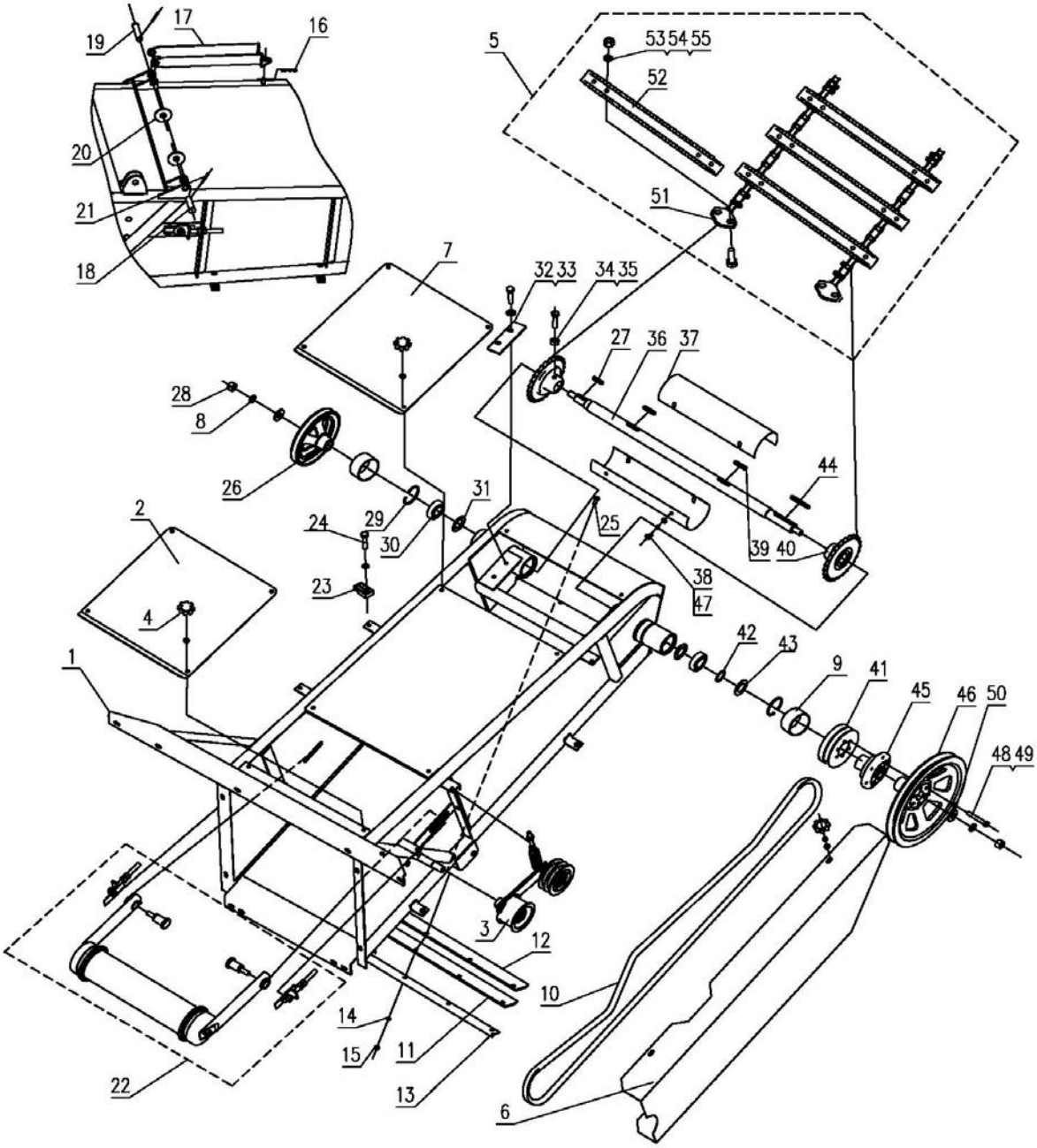

Conveyor Assy

NO.	Description	QTY	Part Code	Note
40	Chain Wheel , Conveyor	2	W2.5E-01B-02-04Y	
41	Driving Wheel A, Header	1	W2.5E-01B-02-07	
42	Plate, Adjusting	on demand	W2.5-02-56-07-22	
43	Plate	on demand	W2.5-02G-02-10-01-05	
44	Key A8×50	1	GB/T1096-79	
45	Driving Hub, Left	1	W2.5E-01B-02-38X	
46	Belt Pulley, Upper Shaft	1	W2.5E-01B-02-32	
47	Washer 8	4	GB/T97.1-85	
48	Bolt M10×70	6	GB/T5782-86	
49	Washer 10	6	GB/T93-87	
50	Retaining Ring	2	W2.5-01-02-12	
51	Conveyor Chain C2060-84	2	W3.5-01A-02-09-01	
52	Plate, Hanging	14	W2.5E-01B-02-09B-02	
53	Bolt M10×20×1.25	56	GB/T5786-86	
54	Washer 10	56	76GB/T93-87	
55	Nut 10×1.25	56	GB/T6171-86	

Conveyor Tension Pulley Assy

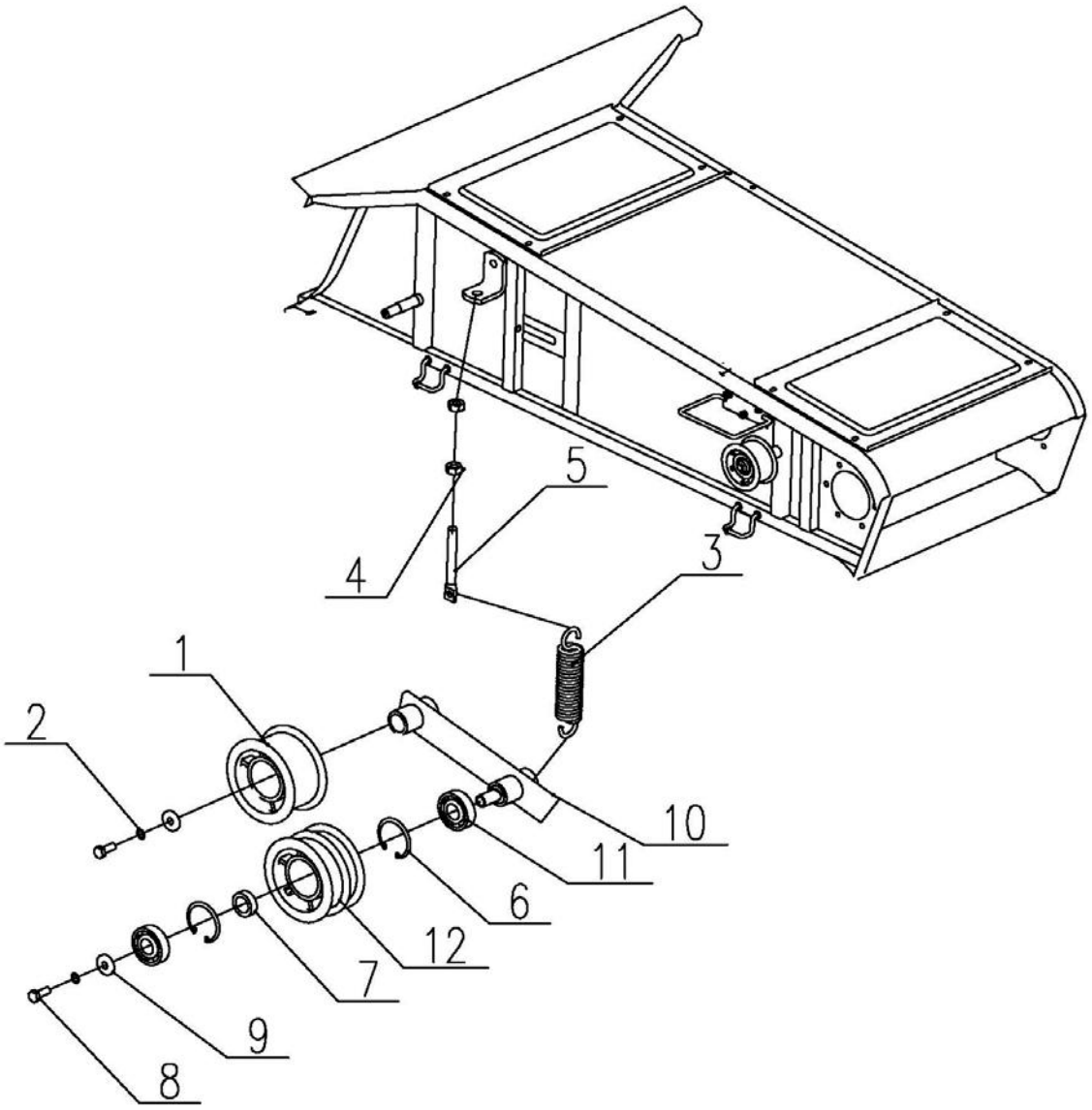

Conveyor Tension Pulley Assy

NO.	Description	QTY	Part Code	Note
1	Tension Pulley Assy	1	W2.5K-02SA-09A-01-00	
2	Washer 8	2	GB/T93-87	
3	Spring	1	W2.0-01-02-05-01	
4	Nut M10	2	GB/T6170-86	
5	Screw Rod	1	W2.5E-01M-02S-05-05	
6	Circlip for Bore	2	GB/T893.1-86	
7	Shaft Sleeve	1	W2.0-02-16-01-03	
8	Bolt M8×20	2	GB/T5783-86	
9	Retaining Ring	2	W2.0-02-17-03	
10	Frame Assy , Tension Pulley	1	W2.5E-01M-02S-05-02-00	
11	Bearing 6204-RS	2	GB/T276-94	
12	Tension Pulley	1	W2.0-01-02-05-03	

Conveyor Driven Wheel Assy

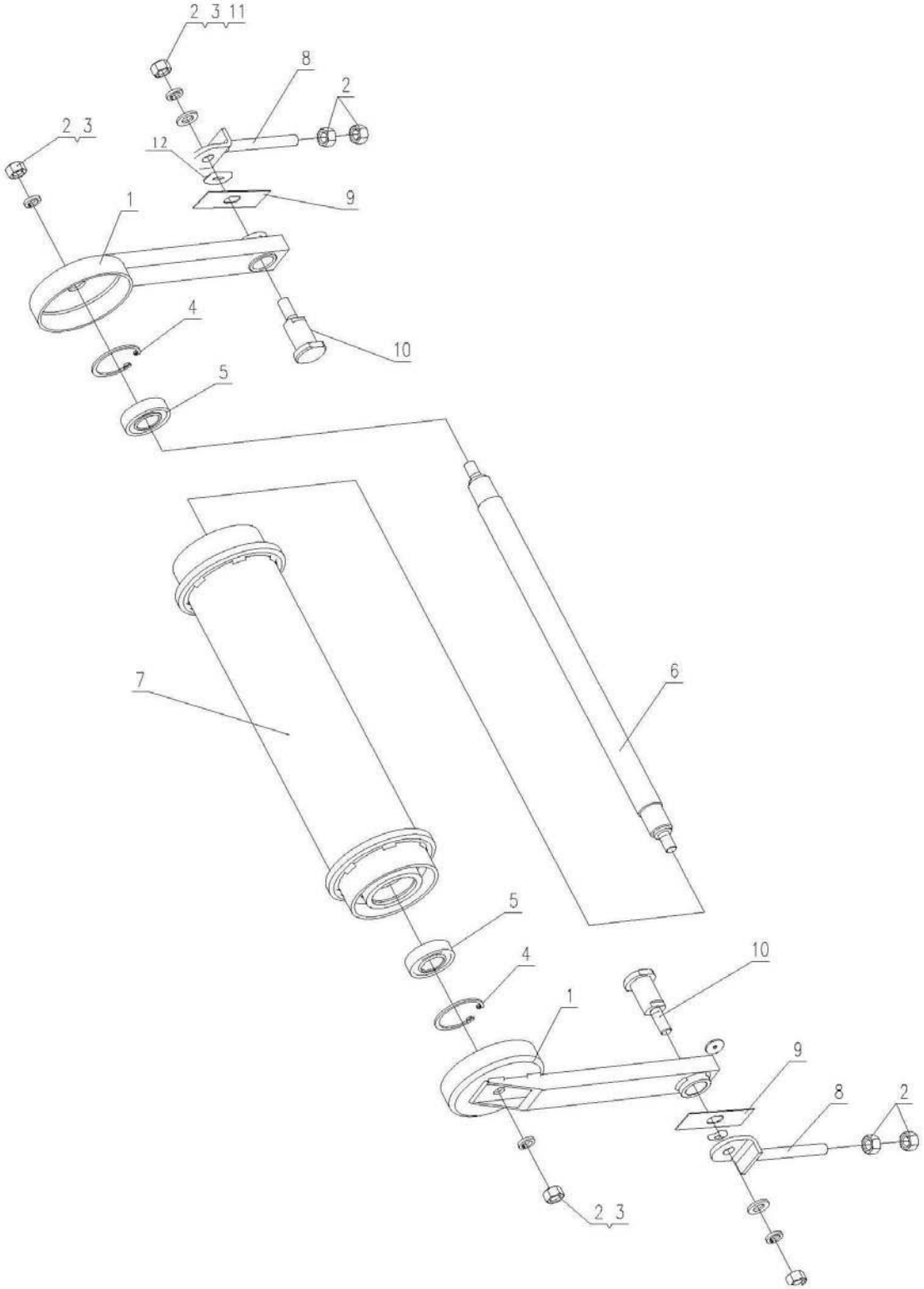

Conveyor Driven Wheel Assy

NO.	Description	QTY	Part Code	Note
1	Support Arm Assy	2	W2.5E-01B-02-02-01-00	
2	Nut M12	8	GB/T6170-86	
3	Washer 12	4	GB/T93-87	
4	Retaining Ring for Bore 52	2	GB/T893.1-86	
5	Bearing 6205-2RS	2	GB/T276-94	
6	Shaft, Driven Wheel	1	W2.5E-01B-02-02-02	
7	Driven Wheel Weld	1	W2.5E-01B-02-02-03-00	
8	Bolt Assy , Adjusting	2	W2.5E-01B-02Y-02-03-00	
9	Leakage-proof Plate	2	W2.5E-01B-02Y-02-06	
10	Short Shaft	2	W2.5E-01B-02Y-02-04A	
11	Washer 12	2	GB/T97.1-85	
12	Retaining Ring	2	W2.5E-01B-02Y-02-05	

Ⅱ. Thresher Part

Thresher Assy(Canopy)

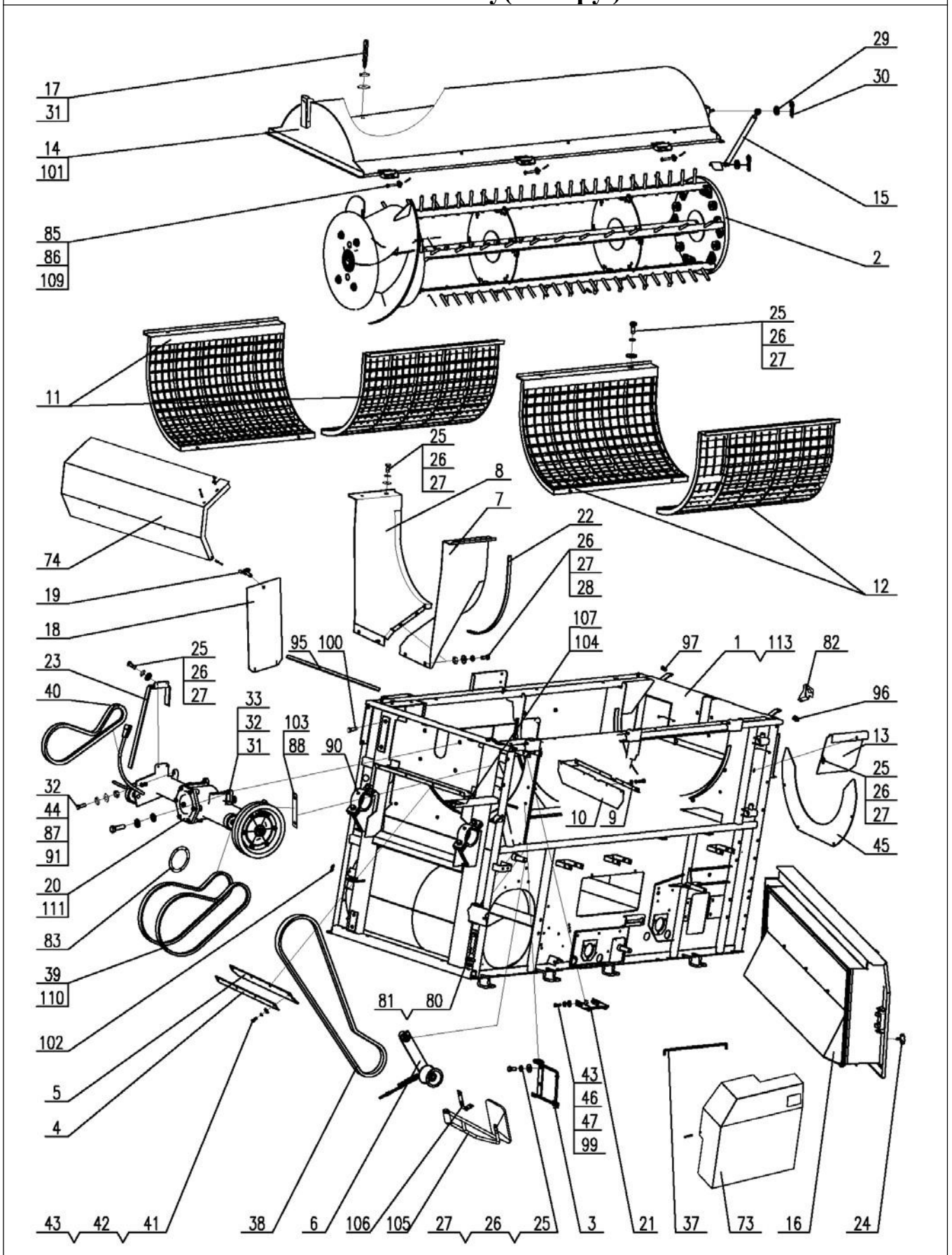

Thresher Assy (Canopy)

NO.	Description	QTY	Part Code	Note
1	Frame Weld, Threshing	1	W2.5K-02PE-01-00	
2	Thresher Cylinder Assy	1	W2.5K-02S-02-00	
3	Side Cover, Support	1	W2.5P-02-01-15-00	
4	Press Plate	1	W2.5-02-01-20	
5	Dust Proof Plate	1	W2.5-02-01-21	
6	Active Tension Assy	1	W2.5K-02SA-09A-00	
7	Inlet Assy , Left	1	W2.5-02G-01-05B-00	
8	Inlet Assy , Right	1	W2.5-02G-01-03B-00	
9	Press Plate	1	W2.5-02-01-23	
10	Canvas, Front	1	W2.5-02-01-24	
11	Concave Grid Assy , Front	2	W3.5H-02-04-00	
12	Concave Grid Assy , Rear	2	W3.5H-02-06-00	
13	Support Plate, Straw Outlet	1	W2.5-02G-01-16-00	
14	Thresher Cover Assy	1	W2.5K-02PE-07-00	
15	Air Brake	1	W2.5-02G-01-40	
16	Cover Plate Assy	1	W2.5K-02P-08-00	
17	Screw Rod	3	W2.5-02-01-33A	
18	Cover Plate, Right	1	W2.5K-02S-27	
19	Bolt M8×16	1	GB5783-86	
20	Gearbox Assy , Double Transmission	1	W2.5K-02P-17A-00	2SBType1496Belt Only
21	Frame Weld, Cover	4	W2.5P-02-01-11-00	
22	Gasket, Seal	2	W2.5-02-01-29	
23	Plate, Protecting	1	W2.5-02-01-13-00	
24	Bolt	1	W2.0-01-02-07-00	
25	Bolt M8×20	40	GB5783-86	
26	Washer, Plain, Big	50	GB96-85	
27	Washer 8	80	GB93-87	
28	Nut M8	4	GB6170-86	
29	Washer 10	2	GB97.1-85	
30	Pin	2	XSS46-06	
31	Washer 12	19	GB97.1-85	
32	Washer 12	21	GB93-87	
33	Bolt M12×40×1.25	4	GB5786-86	
34	Bolt M10×25	20	GB5783-86	
35	Washer 10	24	GB93-87	
36	Washer, Plain	22	WD-150.01.26.01	
37	Rod, Support	1	W2.5-02-01-32	
38	Belt, C Type, Gearbox, Fan	2	W2.5-02S-01-36	
39	Belt, 2SB, Upper Shaft, Gearbox	1	W2.5-02S-01A-37	2SBType1496Belt Only
40	SB Belt	1	W2.5-02S-01-38	

Thresher Assy (Canopy)

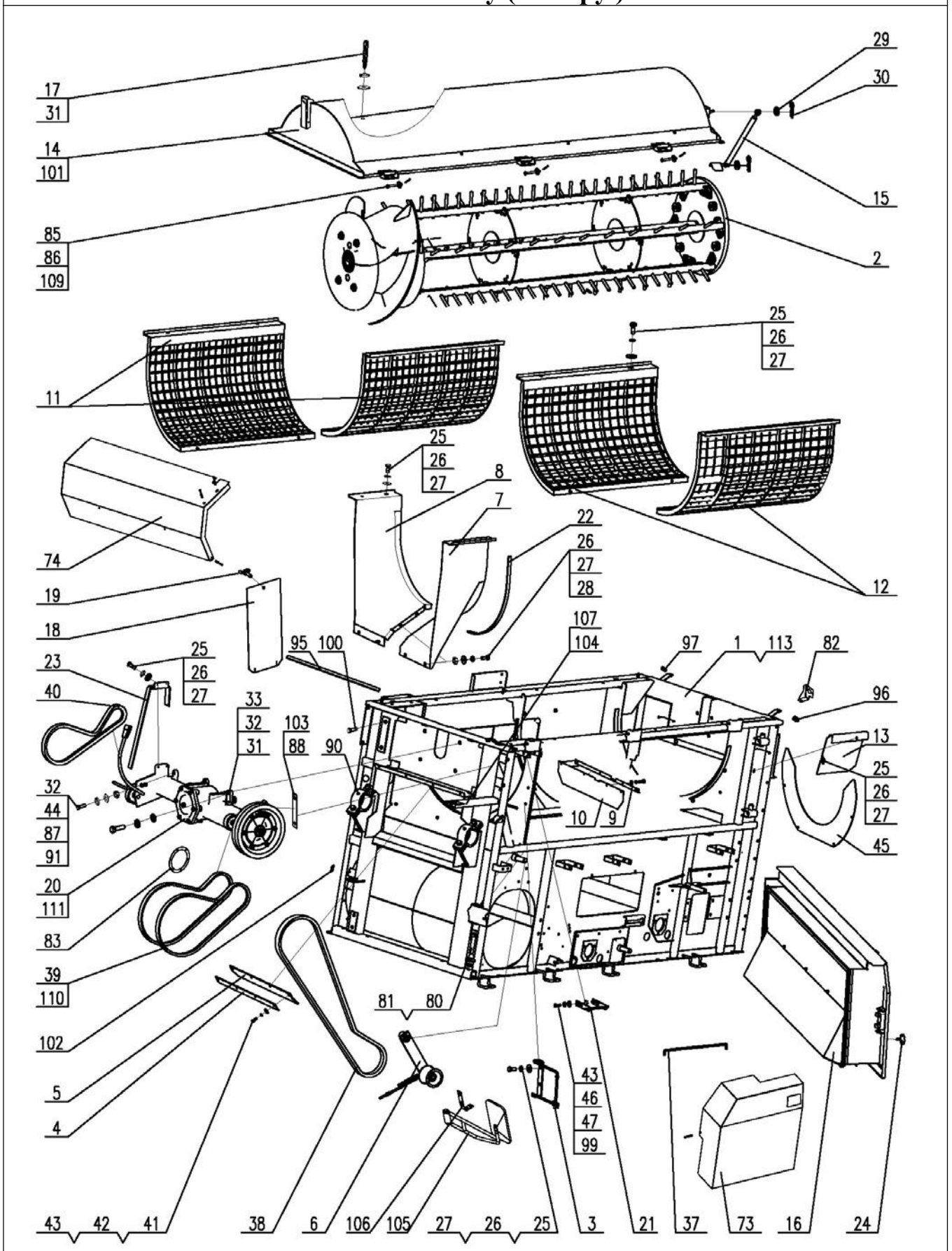

Thresher Assy (Canopy)				
NO.	Description	QTY	Part Code	Note
41	Bolt M6×20	13	GB5783-86	
42	Washer 6	3	GB96-85	
43	Washer 6	38	GB93-87	
44	Nut M12	2	GB6171-86	
45	Baffle Plate	1	W2.5-02G-01-41S	
46	Washer 6	23	GB97.1-85	
47	Nut M6	25	GB6170-86	
48	Nut M10	22	GB6170-86	
49	Guide Plate, Swing Sieve	2	W2.5-02-02-02	
50	Fan Assy	1	W2.5P-02-02-05-00	
51	Plate Weld	1	W2.5K-02PD-04-00	
52	Plate Weld	1	W2.5K-02PD-03-00	
53	Impurity Assy	1	W3.5H-02-11-00	
54	Vibrate Sieve Assy	1	W2.5-02G-02-13B-00	
55	Transmission Belt, Sieve Box	1	W2.5K-02PA-02-37	
56	Tension Pulley Assy	1	W2.5P-02-02-12-00	
57	Transmission Belt, Auger, Fan	1	W2.5C-02S-02-36	Bando
58	Tension Assy , Main Clutch	1	W2.5C-02-02-22C-00	
59	Cover Plate, Left	1	W2.5-02-02-28	
60	Bolt M8×25	18	GB5783-86	
61	Bottom Plate Weld	1	W2.5K-02PC-06-00	
62	Bottom Plate, Impurity	1	W2.5-02-02-07	
63	Cover Plate, Right	1	W2.5-02-02-08	
64	Plate, Adjusting, Fan, Left	1	W2.5-02-02-24-00	
65	Plate, Adjusting, Fan, Right	1	W2.5-02-02-23-00	
66	Cover Plate, Shaking, Right	1	W2.5P-02-02-18	
67	Bolt M6×12	4	GB5783-86	
68	Plate, Screw Rod Box	1	W2.5-02-02-14	
69	Gasket, Seal 2	1	W2.5-02-02-15	
70	Plate, Screw Rod Box	1	W2.5-02-02-16	
71	Frame Assy , Support	1	W3.5-02A-26-00	2SB Type1496BeltOnly
72	Sponge, Seal	4	W2.5-02-02-32	
73	Cover Assy , Left, Front, Upper	1	W2.5P-02-20-00	
75	Cover Assy , Front	1	W2.5P-02-24-00	
76	Cover Assy , Left, Rear	1	W2.5K-02PA-25-00	
77	Cover Assy , Lower, Rear	1	W2.5-02-23A-00	
78	Cover Assy , Rear	1	W2.5-02-21-00	
79	Bolt M8×18	8	GB5783-86	
80	Bolt M10×30	1	GB5783-86	

Thresher Assy (Canopy)

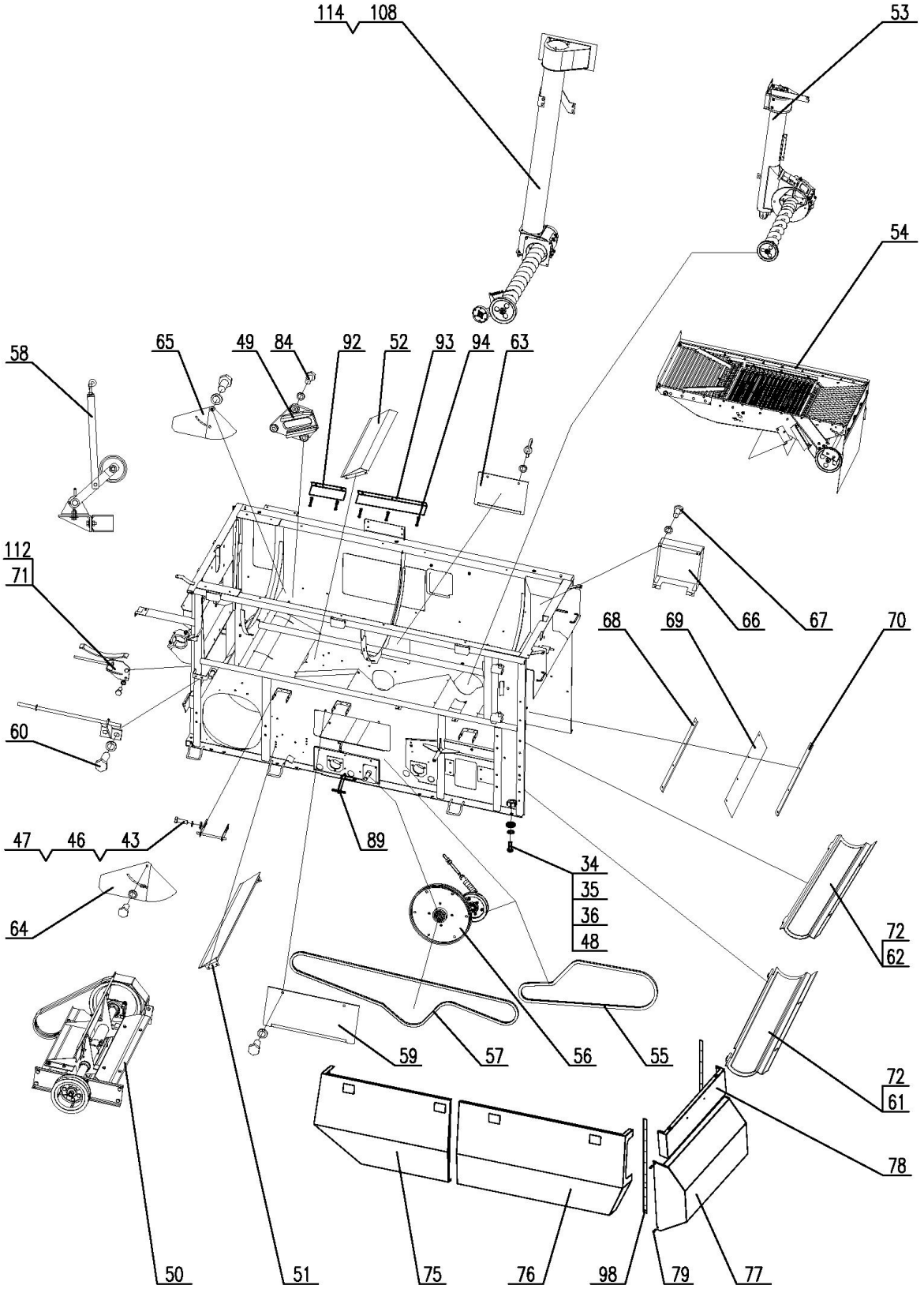

Thresher Assy (Canopy)				
NO.	Description	QTY	Part Code	Note
81	Bolt M10×85	1	GB5782-86	
82	Frame, Turn Signal, Left, Rear	1	W2.5-02-10	
83	Plate, Adjusting	on demand	W2.5-02-11	
84	Bolt M8×25×1	6	GB5786-86	
85	Pin Shaft-BType10X95	3	GB882-86	
86	Pin 2.5X20	3	GB91-86	
87	Bolt M12X80	2	GB5782-86	
88	Plate	1	W2.5K-02SA-14	
89	Buckle Seat Weld	1	W2.5K-02PA-40-00	
90	Oil cup M8×1	2	GB/T1152-89	
91	Washer 12	2	GB96-85	
92	Guide Plate, Front	1	W2.5K-02PD-05	
93	Guide Plate, Rear	1	W2.5K-02PD-06	
94	Bolt M6×16	5	GB5783-86	
95	Sponge, Seal	1	W2.5K-02PD-07	
96	Stopper, Left	1	W2.5K-02PD-08	
97	Stopper, Right	1	W2.5K-02PD-09	
98	Gasket, Seal	2	W2.5K-02PD-10	
99	Bolt M6×18	8	GB5783-86	
100	Bolt M12×35×1.25	2	GB5786-86	
101	Cover Assy , Threshing Cylinder	1	W2.5K-02PF-07-00	Optional
102	Dust Proof Ring	on demand	W2.5DA-07-06-03-05	
103	Plate	on demand	W2.5K-02SA-15	
104	Connecting Seat Assy , Cover	1	W2.5K-02PD-11-00	
105	Reflector	1	W2.5K-02PD-57	
106	Reflector Seat	1	W2.5K-02PD-56	
107	Washer 8	2	GB97.1-85	
108	Grain Auger Assy.	1	W3.5H-02-10-00	
109	Washer, Plain 10	3	GB97.1-85	
110	Belt, SC Type, Upper Shaft, Gearbox	1	W2.5-02S-01-37	SCType1465BeltOnly
111	Gearbox Assy ,Double Transmission	1	W2.5K-02P-17-00	SCType1465BeltOnly
112	Frame Assy , Support	1	W2.5K-02PD-25-00	SCType1465BeltOnly
113	Frame Weld, Threshing	1	W2.5K-02PD-01-00	Sack Type
114	Grain Auger Assy	1	W2.5K-02PB-10C-00	Sack Type

Thresher Assy (Cabin)

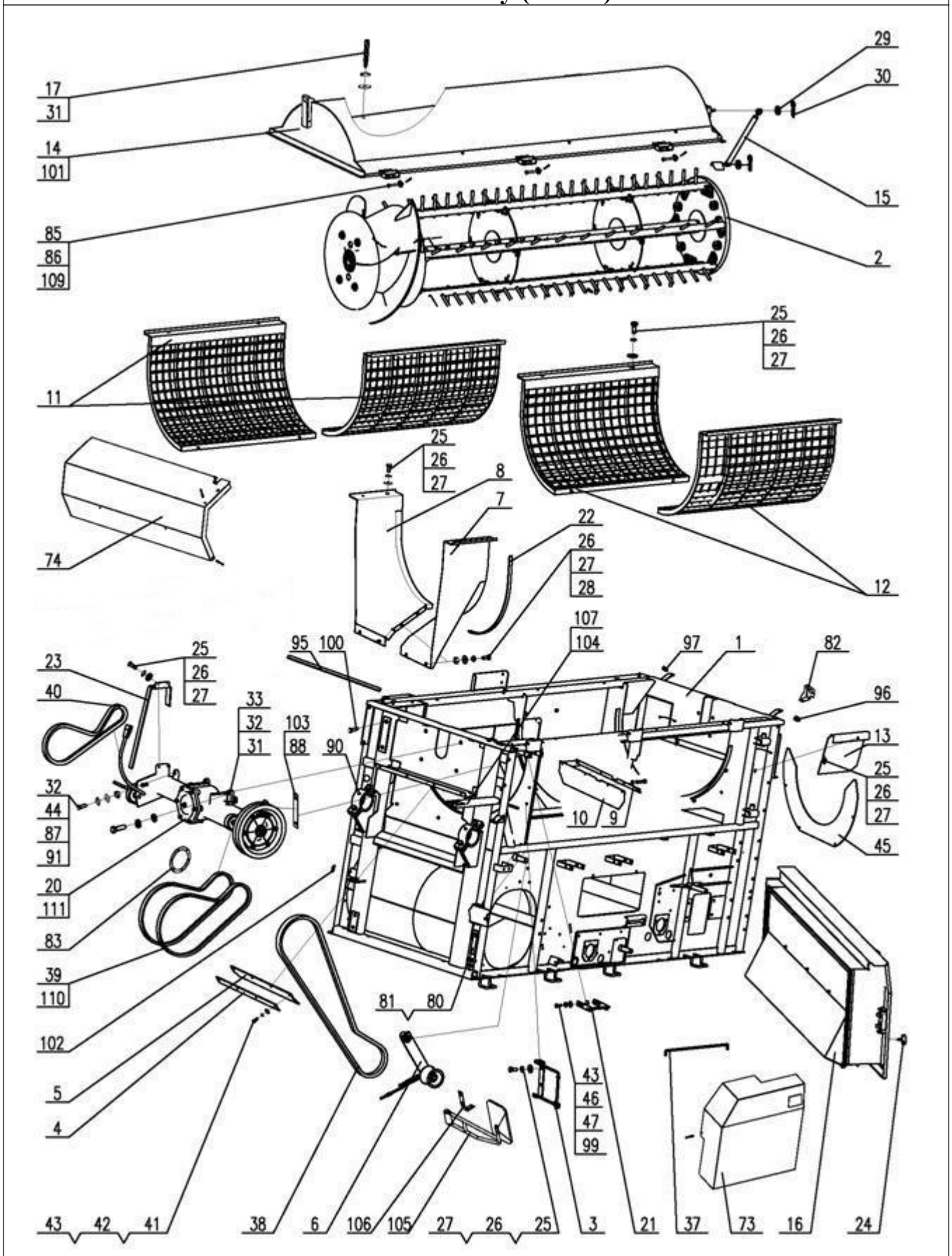

Thresher Assy (Cabin)

NO.	Description	QTY	Part Code	Note
1	Frame Weld, Threshing	1	W2.5K-02PE-01-00	
2	Threshing Cylinder Assy	1	W2.5K-02S-02-00	
3	Side Cover, Frame	1	W2.5P-02-01-15-00	
4	Press Plate	1	W2.5-02-01-20	
5	Dust Proof Plate	1	W2.5-02-01-21	
6	Active Tension Assy	1	W2.5K-02SA-09A-00	
7	Inlet Weld, Left	1	W2.5-02G-01-05B-00	
8	Inlet Weld, Right	1	W2.5-02G-01-03B-00	
9	Press Plate	1	W2.5-02-01-23	
10	Canvas, Front	1	W2.5-02-01-24	
11	Concave Grid Assy , Front	2	W3.5H-02-04-00	
12	Concave Grid Assy , Rear	2	W3.5H-02-06-00	
13	Support Plate, Straw Outlet	1	W2.5-02G-01-16-00	
14	Thresher Cover Assy	1	W2.5K-02PE-07-00	Optional
15	Air brake	1	W2.5-02G-01-40	
16	Cover Plate Assy	1	W2.5K-02P-08-00	
17	Screw Rod	3	W2.5-02-01-33A	
20	Gearbox Assy , Double Transmission	1	W2.5K-02P-17A-00	2SB Type1496Belt Only
21	Frame Weld, Cover	4	W2.5P-02-01-11-00	
22	Gasket, Seal	2	W2.5-02-01-29	
23	Plate, Protecting	1	W2.5-02-01-13-00	
24	Bolt	1	W2.0-01-02-07-00	
25	Bolt M8×20	40	GB5783-86	
26	Washer, Plain, Big 8	50	GB96-85	
27	Washer 8	80	GB93-87	
28	Nut M8	4	GB6170-86	
29	Washer 10	2	GB97.1-85	
30	Pin	2	XSS46-06	
31	Washer 12	19	GB97.1-85	
32	Washer 12	21	GB93-87	
33	Bolt M12×40×1.25	4	GB5786-86	
34	Bolt M10×25	20	GB5783-86	
35	Washer 10	24	GB93-87	
36	Washer, Plain	22	WD-150.01.26.01	
37	Rod, Support	1	W2.5-02-01-32	
38	Belt, C Type, Gearbox, Fan	2	W2.5-02S-01-36	
39	Belt, 2SB, Upper Shaft, Gearbox	1	W2.5-02S-01A-37	2SBType1496Belt Only
40	SB Belt	1	W2.5-02S-01-38	
41	Bolt M6×20	13	GB5783-86	
42	Washer 6	3	GB96-85	

Thresher Assy (Cabin)

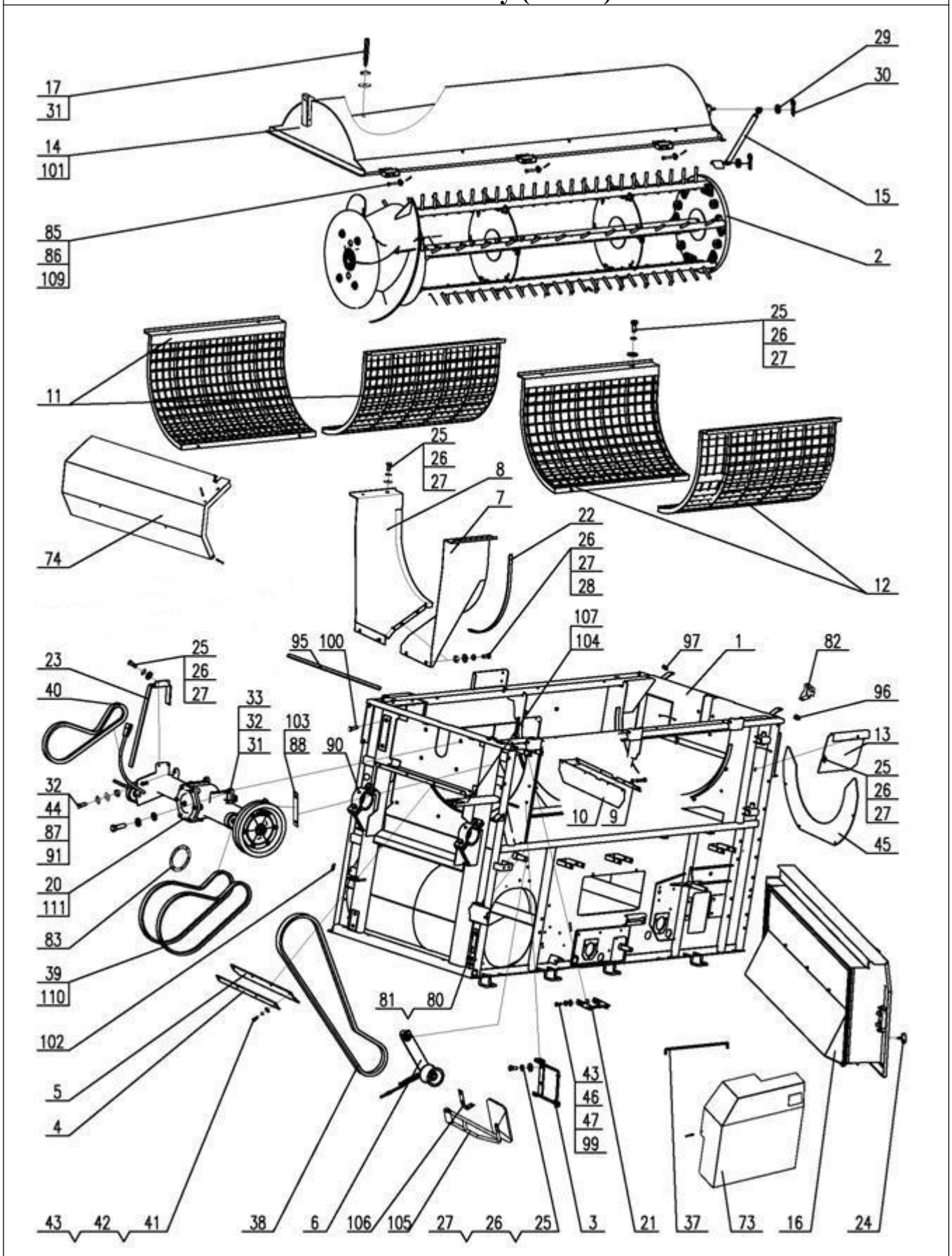

Thresher Assy (Cabin)

NO.	Description	QTY	Part Code	Note
43	Washer 6	38	GB93-87	
44	Nut M12	2	GB6171-86	
45	Baffle Plate	1	W2.5-02G-01-41S	
46	Washer 6	23	GB97.1-85	
47	Nut M6	25	GB6170-86	
48	Nut M10	22	GB6170-86	
49	Guide Plate, Swing Sieve	2	W2.5-02-02-02	
50	Fan Assy	1	W2.5P-02-02-05-00	
51	Plate Weld	1	W2.5K-02PD-04-00	
52	Plate Weld	1	W2.5K-02PD-03-00	
53	Impurity Assy	1	W3.5H-02-11-00	
54	Vibrate Sieve Assy	1	W2.5-02G-02-13B-00	
55	Transmission Belt, Sieve Box	1	W2.5K-02PA-02-37	
56	Tension Pulley Assy	1	W2.5P-02-02-12-00	
57	Transmission Belt, Auger, Fan	1	W2.5C-02S-02-36	Bando
58	Tension Assy , Main Clutch	1	W2.5C-02-02-22E-00	
59	Cover Plate, Left	1	W2.5-02-02-28	
60	Bolt M8×25	18	GB5783-86	
61	Bottom Plate Weld	1	W2.5K-02PC-06-00	
62	Bottom Seat, Impurity	1	W2.5-02-02-07	
63	Cover Plate, Right	1	W2.5-02-02-08	
64	Plate, Adjusting, Fan, Left	1	W2.5-02-02-24-00	
65	Plate, Adjusting, Fan, Right	1	W2.5-02-02-23-00	
66	Cover Plate, Shaking, Right	1	W2.5P-02-02-18	
67	Bolt M6×12	4	GB5783-86	
68	Plate, Screw Rod Box	1	W2.5-02-02-14	
69	Gasket, Seal 2	1	W2.5-02-02-15	
70	Plate, Screw Rod Box	1	W2.5-02-02-16	
71	Frame Assy , Support	1	W3.5-02A-26-00	2SBType1496BeltOnly
72	Sponge, Seal	4	W2.5-02-02-32	
73	Cover Assy , Left, Front, Upper	1	W2.5P-02-20-00	
74	Cover Assy , Transmission Box	1	W2.5K-02PD-22-00	
75	Cover Assy , Front	1	W2.5P-02-24-00	
76	Cover Assy , Left, Rear	1	W2.5K-02PA-25-00	
77	Cover Assy , Lower, Rear	1	W2.5-02-23A-00	
78	Cover Assy , Rear	1	W2.5-02-21-00	
79	Bolt M8×18	8	GB5783-86	
80	Bolt M10×30	1	GB5783-86	
81	Bolt M10×85	1	GB5782-86	
82	Frame, Turn Signal, Left, Rear	1	W2.5-02-10	

Thresher Assy (Cabin)

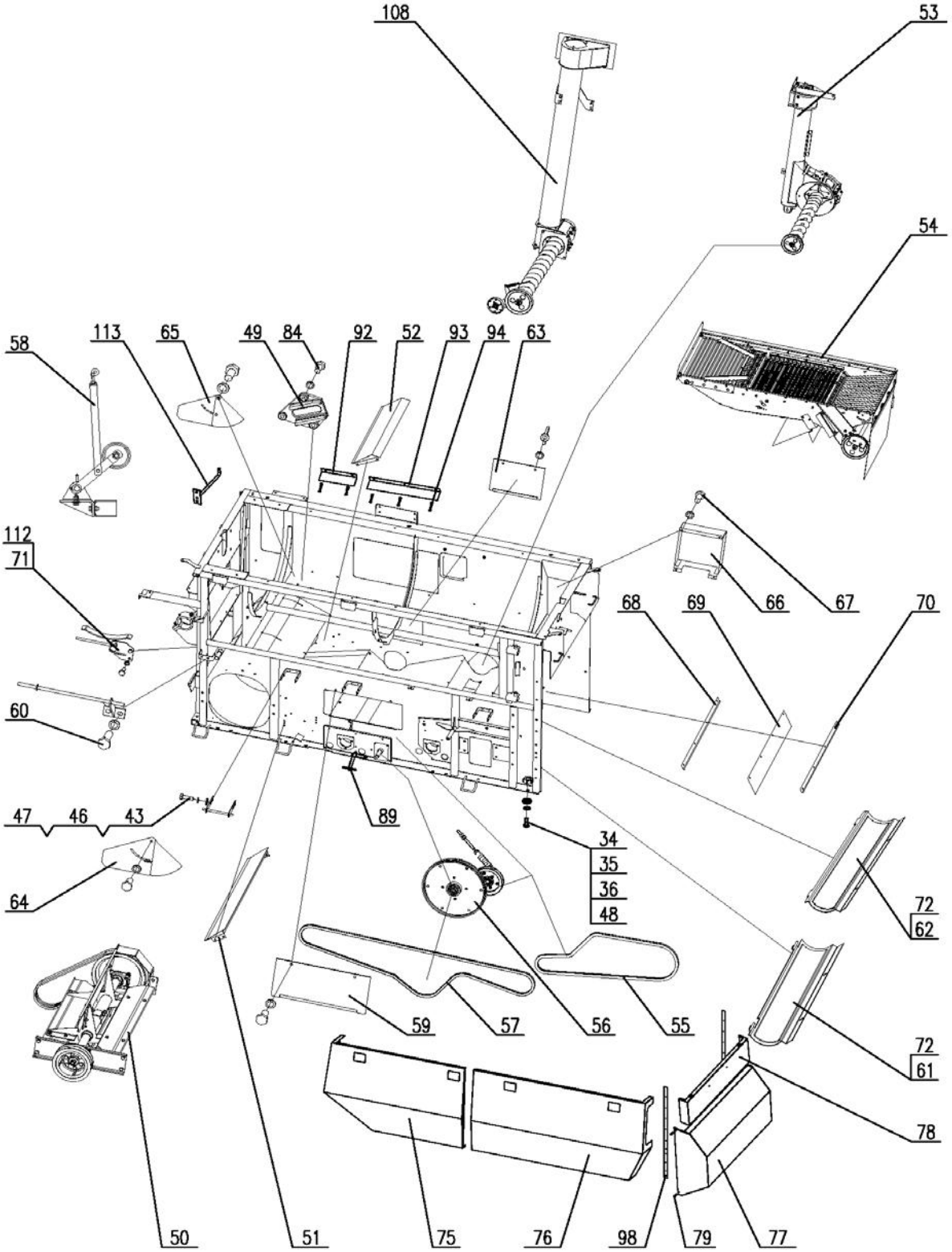

Thresher Assy (Cabin)				
NO.	Description	QTY	Part Code	Note
83	Gasket, Adjusting	on demand	W2.5-02-11	
84	Bolt M8×25×1	6	GB5786-86	
85	Pin Shaft-B Type 10X95	3	GB882-86	
86	Pin2.5X20	3	GB91-86	
87	Bolt M12X80	2	GB5782-86	
88	Plate	1	W2.5K-02SA-14	
89	Buckle Seat Weld	1	W2.5K-02PA-40-00	
90	Oil Cup M8×1	2	GB/T1152-89	
91	Washer 12	2	GB96-85	
92	Guide Plate, Front	1	W2.5K-02PD-05	
93	Guide Plate, Rear	1	W2.5K-02PD-06	
94	Bolt M6×16	5	GB5783-86	
95	Sponge, Seal	1	W2.5K-02PD-07	
96	Left stopper	1	W2.5K-02PD-08	
97	Right stopper	1	W2.5K-02PD-09	
98	Gasket, Seal	2	W2.5K-02PD-10	
99	Bolt M6×18	8	GB5783-86	
100	Bolt M12×35×1.25	2	GB5786-86	
101	Cover Assy , Threshing Cylinder	1	W2.5K-02PF-07-00	
102	Dust Proof Ring	on demand	W2.5DA-07-06-03-05	
103	Plate	on demand	W2.5K-02SA-15	
104	Connecting Seat Weld, Cover	1	W2.5K-02PD-11-00	
105	Reflector	1	W2.5K-02PD-57	
106	Reflector Seat	1	W2.5K-02PD-56	
107	Washer 8	2	GB97.1-85	
108	Grain Auger Assy.	1	W3.5H-02-10-00	
109	Washer, Plain 10	3	GB97.1-85	
110	Belt, SC Type, Upper Shaft, Gearbox	1	W2.5-02S-01-37	SCType1465BeltOnly
111	Gearbox Assy ,Double Transmission	1	W2.5K-02P-17-00	SCType1465BeltOnly
112	Frame Assy , Support	1	W2.5K-02PD-25-00	SCType1465BeltOnly
113	Rod Assy , Support	1	W2.5K-02PF-10-00	Adjustable Cabine Type

Threshing Cylinder

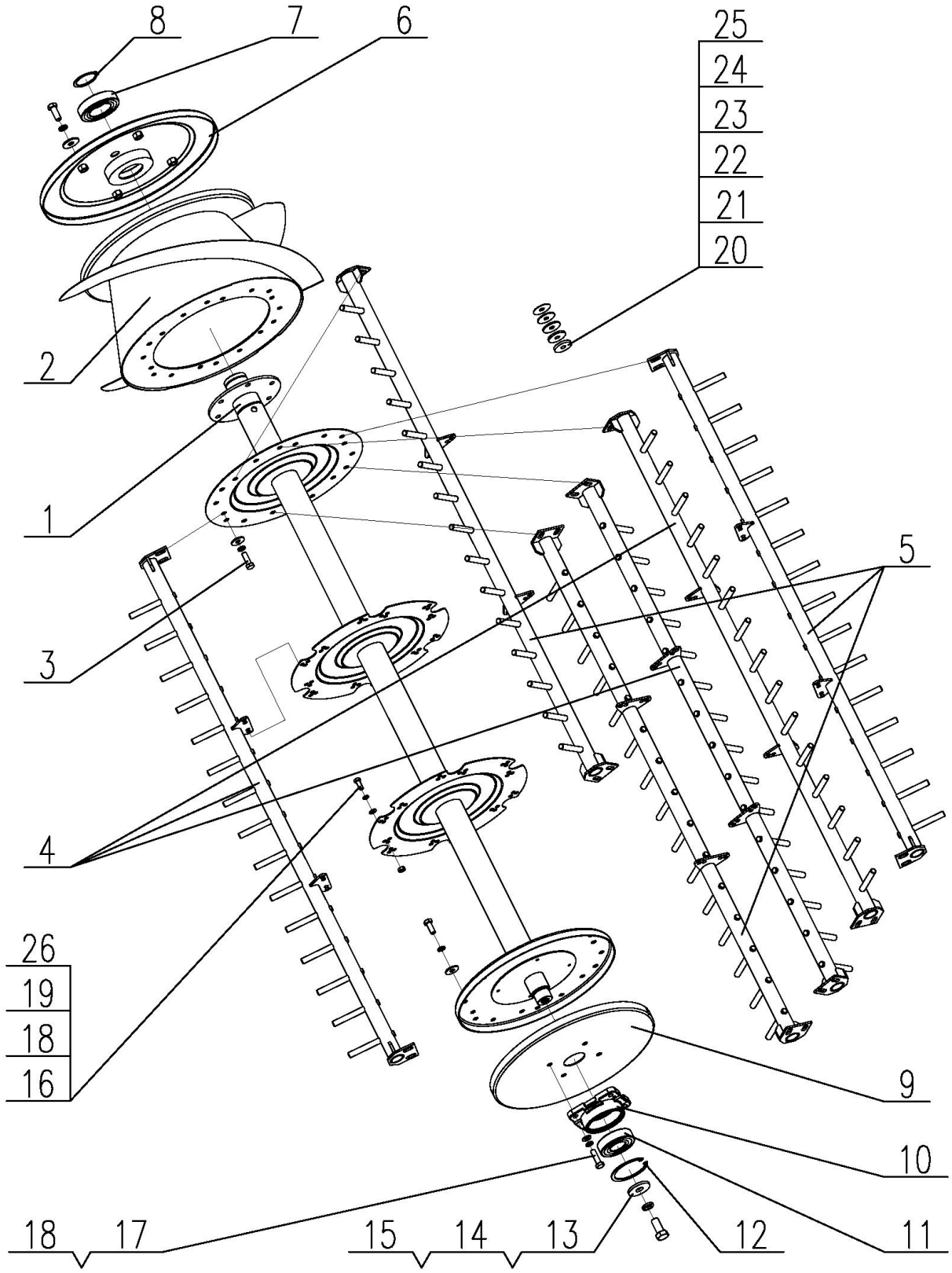

Threshing Cylinder

NO.	Description	QTY	Part Code	Note
1	Shaft Weld	1	W2.5K-02S-02-01-00	
2	Feeding Auger	1	W2.5K-02S-02-02-00A	
3	Bolt M10×30×1.25	12	GB5786-86	10.9
4	Beat Bar Weld A	3	W2.5K-02S-02-03-00	
5	Beat Bar Weld B	3	W2.5K-02S-02-04-00	
6	Spider Assy , Front	1	W2.5-02-01-02-05-00	
7	Bearing 6210-2RS	1	W2.5-02S-01-02-20	
8	Retaining Ring for Shaft 50	1	GB894.1-86	
9	Spider Weld, Rear	1	W2.5-02-01-02-06-00	
10	Bearing Seat, Rear	1	W2.5-02-01-02-12	
11	Bearing 6307-2RS	1	W2.5-02S-01-02-21	
12	Retaining Ring for Bore 80	1	GB893.1-86	
13	Retaining Ring	1	W2.5-02-01-02-13	
14	Bolt M16×35×1.5	1	GB5786-86	
15	Washer 16	1	GB93-87	
16	Bolt M10×25×1.25	54	GB5786-86	10.9
17	Bolt M10×35×1.25	4	GB5786-86	
18	Washer 10	70	GB93-87	
19	Washer, Plain, Big 10	66	GB96-85	
20	Balance Block 1	on demand	W2.5-02G-01-02-14	
21	Balance Block 2	on demand	W2.5-02G-01-02-15	
22	Balance Block 3	on demand	W2.5-02G-01-02-16	
23	Balance Block 4	on demand	W2.5-02G-01-02-17	
24	Balance Block 5	on demand	W2.5-02G-01-02-18	
25	Balance Block 6	on demand	W2.5-02G-01-02-19	
26	Nut M10x1.25	24	GB/T6171-86	

Main Tension Assy

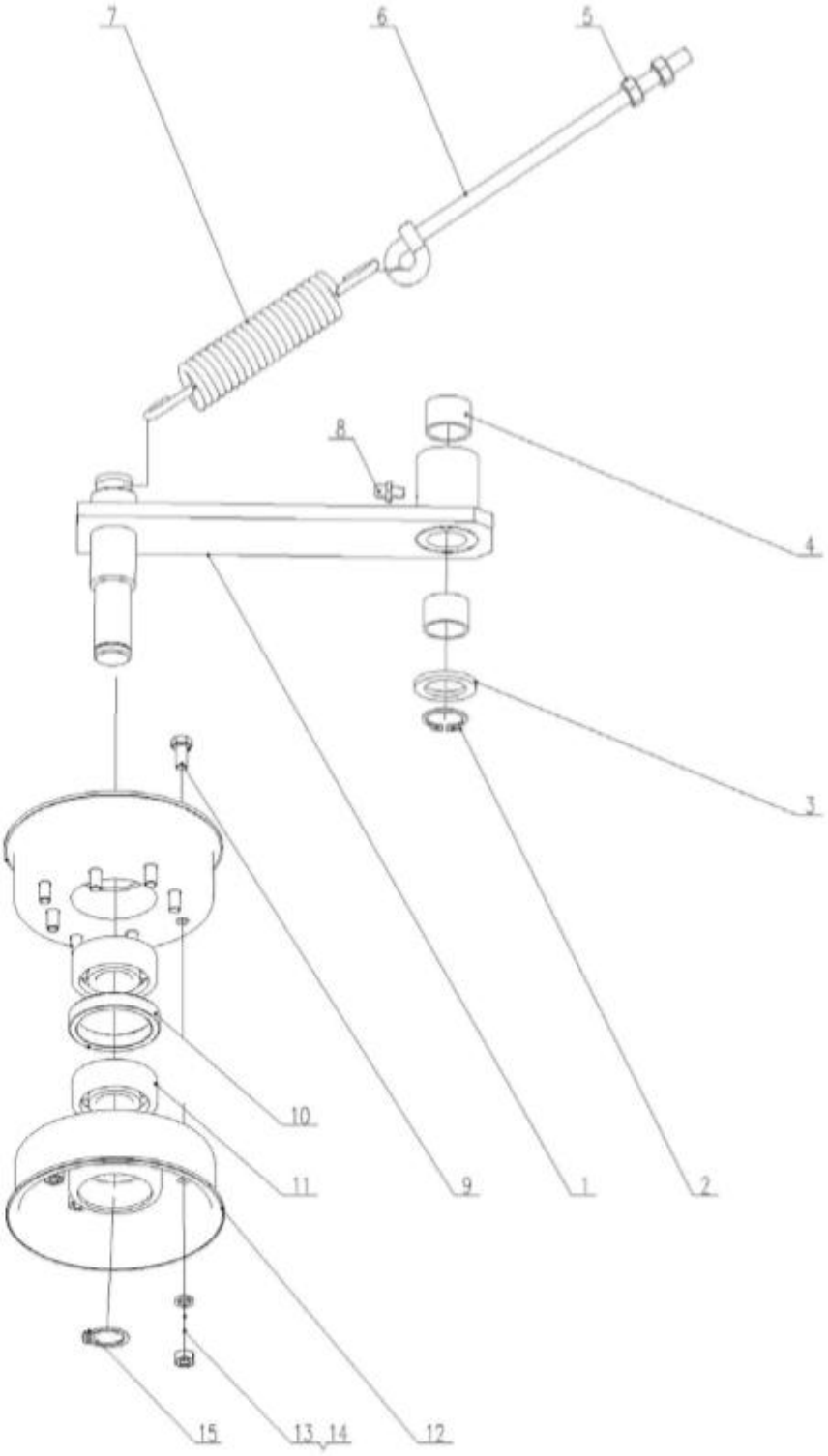

Main Tension Assy

NO.	Description	QTY	Part Code	Note
1	Tension Arm Weld	1	W2.5K-02SA-09A-02-00	
2	Retaining Ring 22	1	GB/T894.1-86	
3	Washer	1	W2.5-02-01-14-02	
4	Bearing (1620)	2	W2.5-02-01-14-05	
5	Nut M8	2	GB/T6170-86	
6	Tension Bolt	1	W2.5K-02S-09-01	
7	Spring, Thresher	1	W2.5-02-02-10-08A	
8	Oil Cup M6	1	GB/T1152-89	
9	Bolt M6×12	8	GB5783-86	
10	Sleeve	1	W2.5K-02SA-09A-01-02	
11	Bearing 6204-2RS	2	GB276-1994	
12	Tension Pulley	2	W2.5K-02SA-09A-01-01	
13	Washer 6	8	GB93-87	
14	Nut M6	8	GB6170-86	
15	Retaining Ring 20	1	GB/T894.1-86	

Threshing Cover Assy (Round)

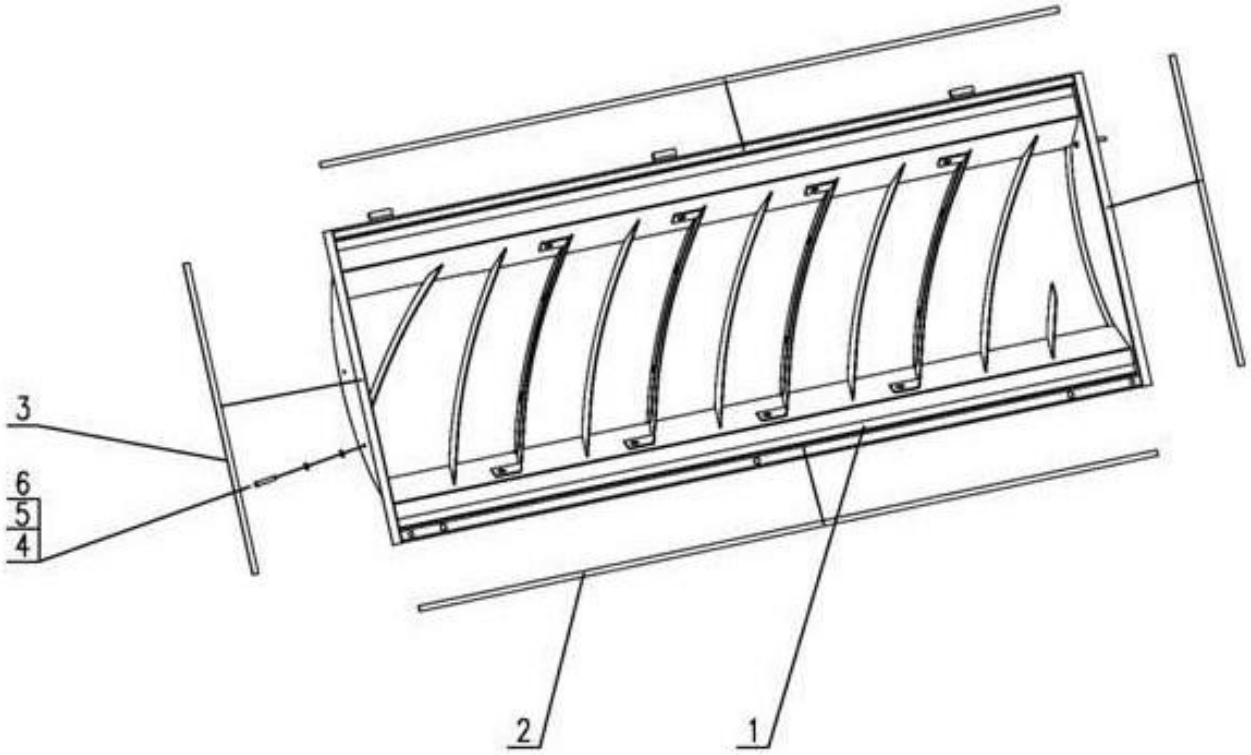

Threshing Cover Assy (Round)

NO.	Description	QTY	Part Code	Note
1	Cylinder Cover Weld	1	W2.5K-02PE-07-01-00	
2	Gasket, Seal A	2	W2.5-02G-01-07-03	
3	Gasket, Seal B	2	W2.5-02G-01-07-04	
4	Bolt M6X16	2	GB/T5783-86	
5	Washer 6	2	GB/T93-87	
6	Washer 6	2	GB/T96-85	

Threshing Cover Assy (Adjustable)

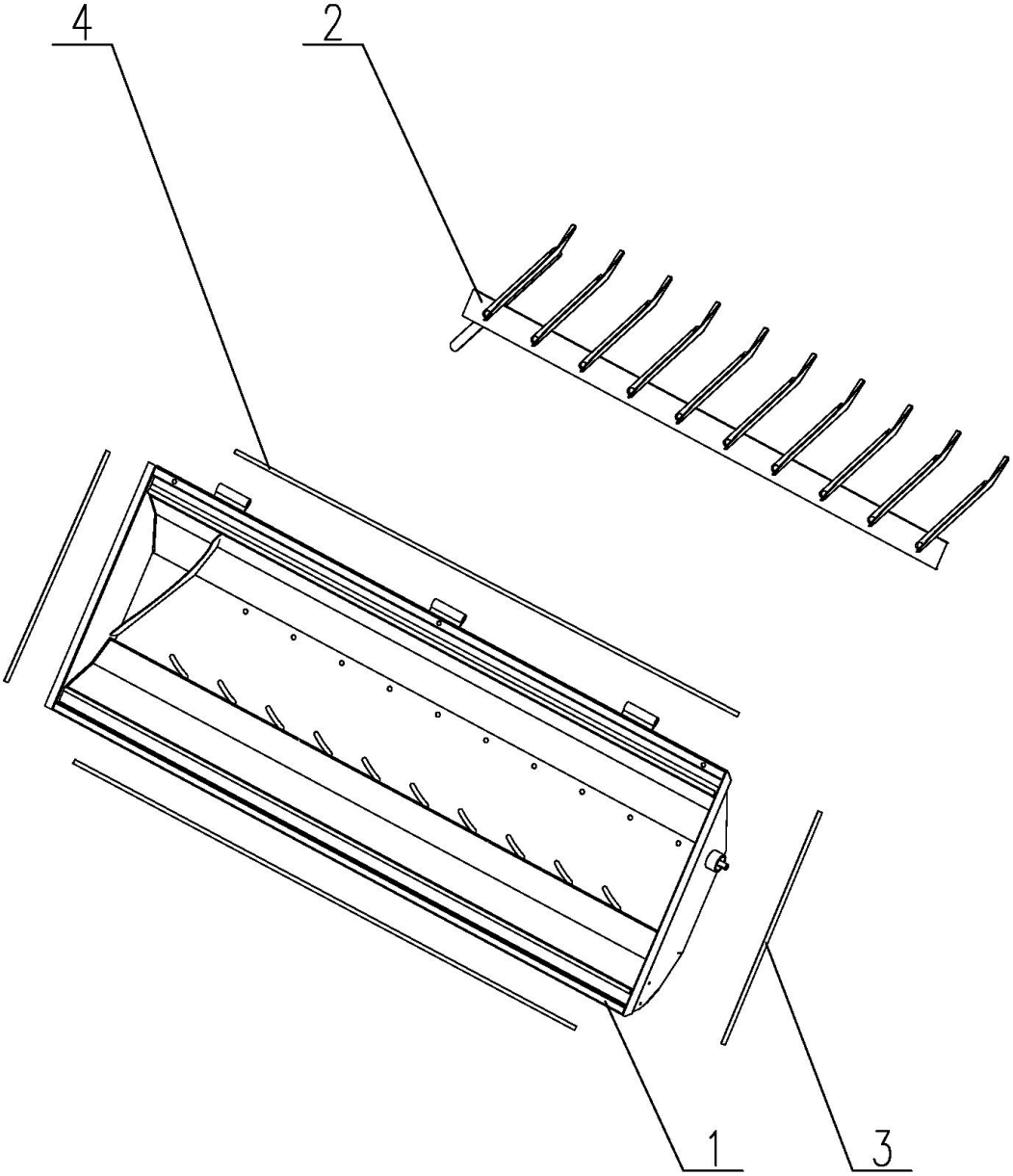

Threshing Cover Assy (Adjustable)

NO.	Description	QTY	Part Code	Note
1	Cylinder Cover Weld	1	W2.5K-02PF-07-01-00	
2	Plate Assy , Straw Guide	1	W2.5K-02PD-07-02-00	
3	Gasket, Seal A	2	W2.5-02G-01-07-03	
4	Gasket, Seal B	2	W2.5-02G-01-07-04	

Straw Guide Plate

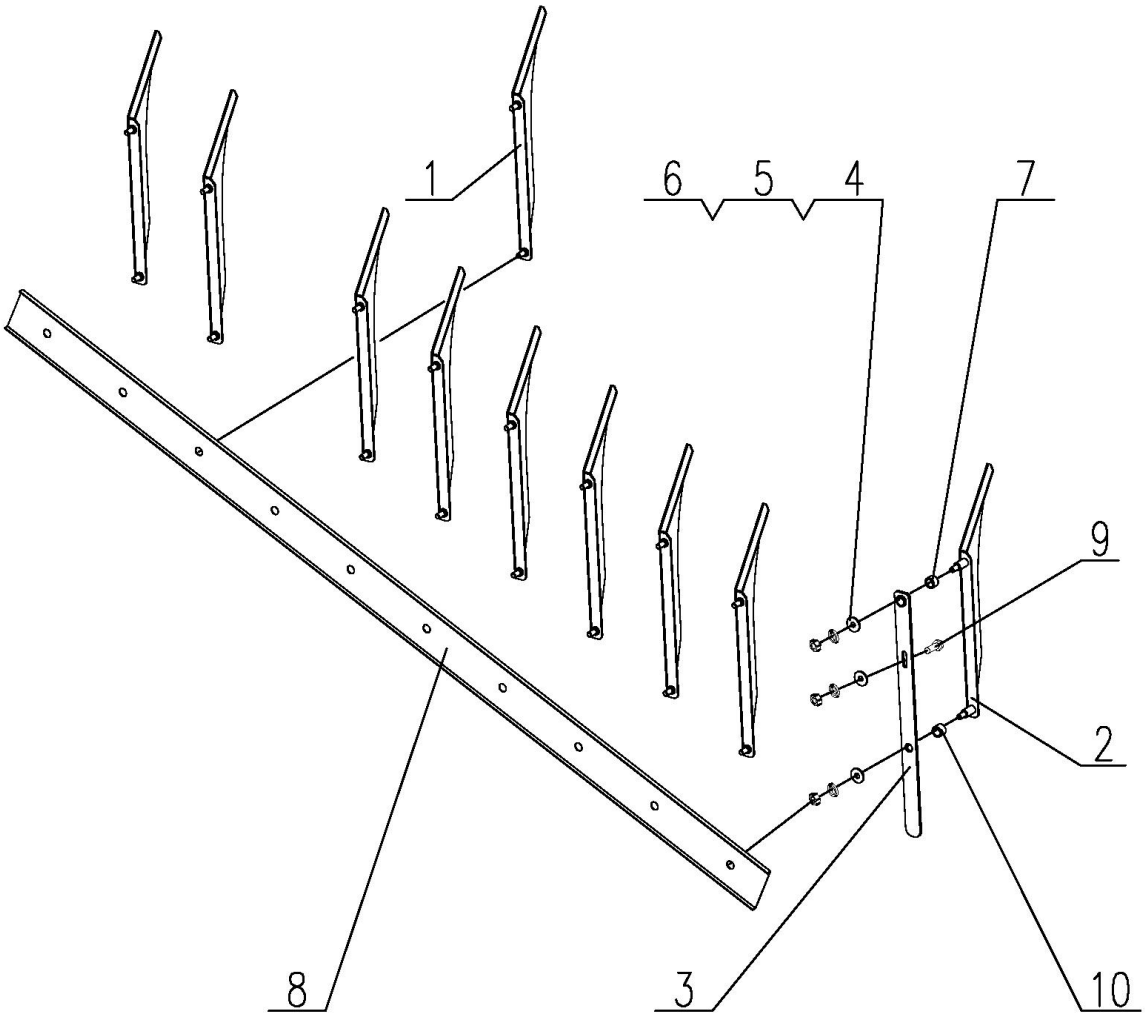

Straw Guide Plate

NO.	Description	QTY	Part Code	Note
1	Plate Weld, Straw Guide A	8	W2.5K-02PD-07-02-02-00	
2	Plate Weld, Straw Guide B	1	W2.5K-02PD-07-02-03-00	
3	Handle Weld, Adjusting	1	W2.5K-02PD-07-02-05-00	
4	Plate 10	19	GB96-85	
5	Nut M10	18	GB/T6170-86	
6	Washer 10	19	GB/T93-87	
7	Sleeve	1	W2.5K-02PD-07-02-06	
8	Connecting Plate	1	W2.5K-02PD-07-02-04	
9	Bolt M8X20	1	GB/T5783-86	
10	Sleeve	1	W2.5K-02PD-07-02-07	

Cover Plate Assy

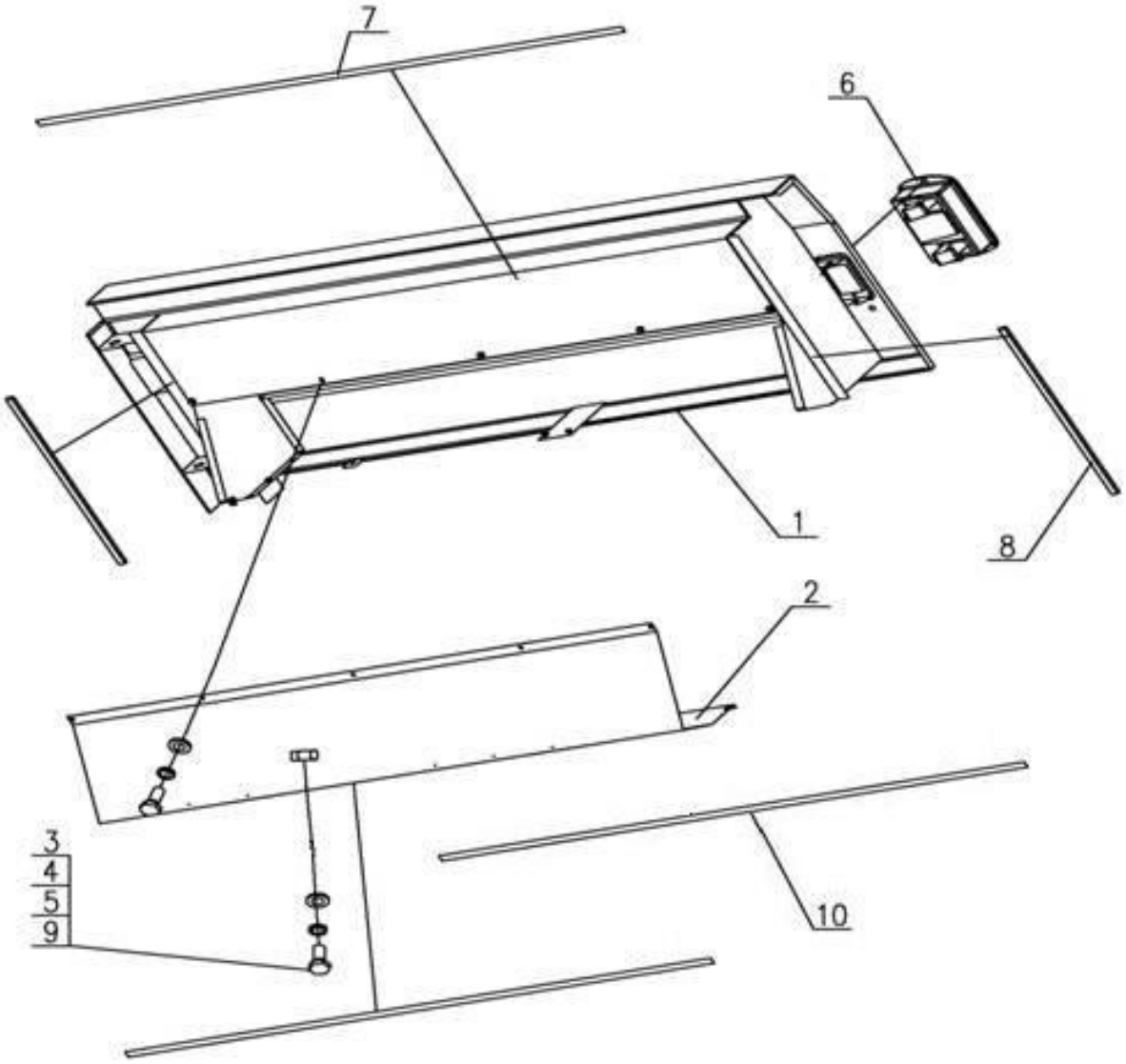

Cover Plate Assy

NO.	Description	QTY	Part Code	Note
1	Cover Plate Weld, Open/Close	1	W2.5K-02P-08-01-00	
2	Plate, Open/Close	1	W2.5K-02P-08-02-00	
3	Bolt M6X16	18	GB/T5783-86	
4	Washer 6	16	GB/T93-86	
5	Washer 6	14	GB/T97.1-86	
6	Buckle	1	WD.2MA.73-02	
7	Seal Strip A	2	W2.5-02G-01-08-03	
8	Seal Strip B	2	W2.5-02G-01-08-04	
9	Nut M6	6	GB6170-86	
10	Seal Strip	1	W2.5K-02P-08-03	

Double Transmission Gearbox Assy (2SB Type1465 Belt Only)

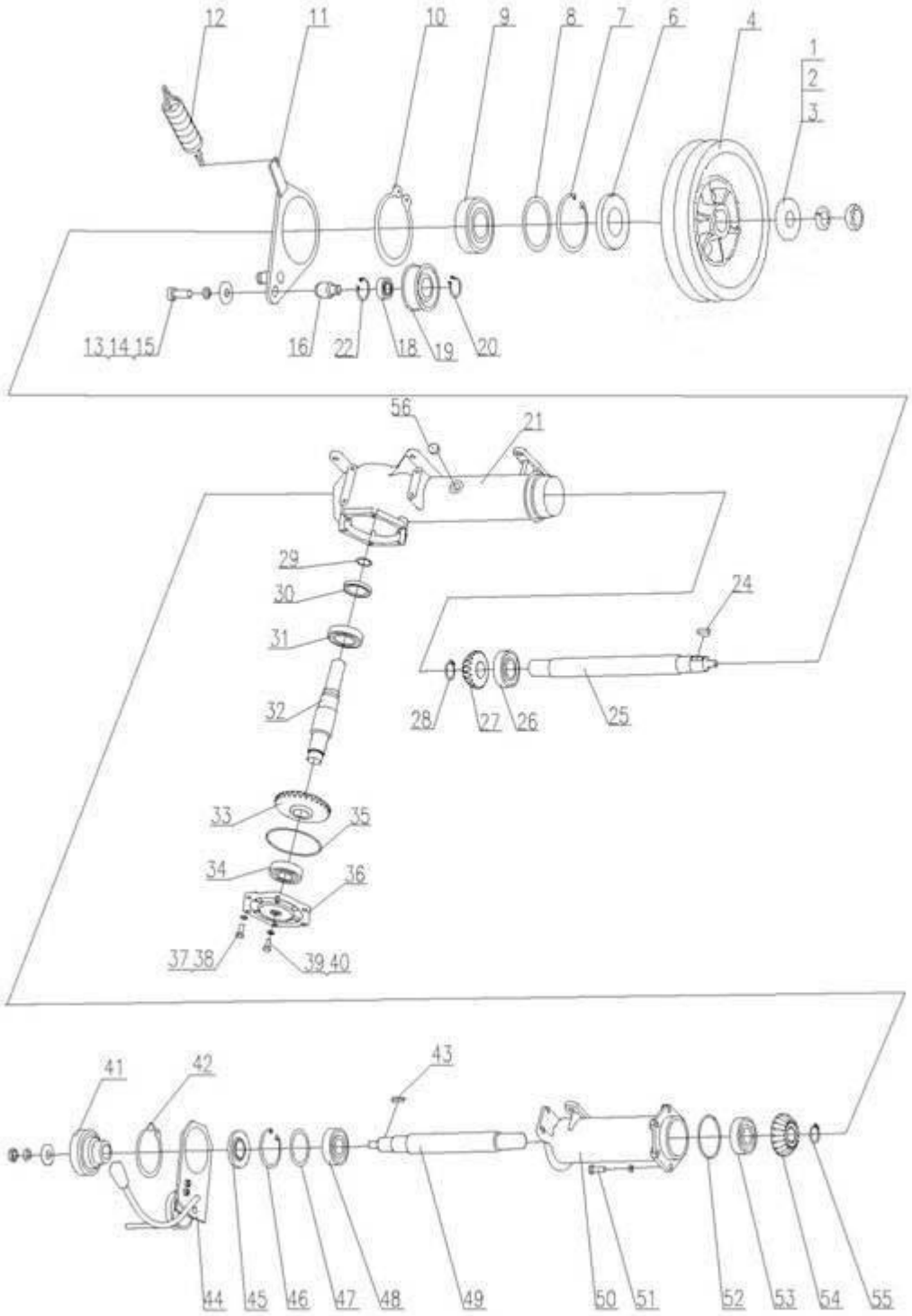

Double Transmission Gearbox Assy (2SB Type1465 Belt Only)

NO.	Description	QTY	Part Code	Note
1	Retaining Ring 17-45	2	W2.5-02A-01-17-04	
2	Gasket 16	2	GB/T93-87	
3	Nut M16×1.5	2	GB/T6171-86	
4	Pulley, Auxiliary	1	W2.5K-02P-01A-17-04	2SBType1465 Belt Only
6	Oil Seal 40×90×10	1	W2.5-02A-01-17-11	
7	Circlip for Bore 90	1	GB/T893.1-86	
8	Washer, Adjusting	on demand	W2.5-02S-01-17-16	
9	Bearing 6308-RS	1	GB/T276-94	
10	Circlip for Shaft 110	1	GB/T894.1-86	
11	Tension Arm	1	W2.5K-02B-01G-17-18-02-00	W2.5-02B-01G-17-18-00 Work Tension Pulley Assy
12	Spring	1	W2.5-02-01-10-03	
13	Bolt M8×20	1	GB/T5783-86	
14	Retaining Ring 8	1	GB/T96-85	
15	Retaining Ring 8	1	GB/T93-87	
16	Shaft	1	W2.5-02B-01G-17-18-01-02	
18	Bearing 6202-2RS	2	GB/T276-86	
19	Tension Pulley	1	W2.5-02B-01G-17-18-01-01	
20	Retaining Ring 15	1	GB/T894.1-86	
21	Left Housing	1	W2.5-02S-01-17-03	
24	Key 10×32	1	GB/T1099-79	
25	Main Transmission Shaft	1	W2.5-02S-01-17-05	
26	Bearing 6308	1	GB/T276-94	
27	Active Bevel Gear	1	W2.5-02A-01-17-06	
28	Circlip for Shaft 40	1	GB/T894.1-86	
29	O Ring 33.5×2.65	1	GB3452.1-82	
30	Oil Seal 45×68×10	1	W2.5-02S-01-17-14	
31	Bearing 6209	1	GB/T276-94	
32	Driven Shaft	1	W2.5-02S-01-17-09	
33	Driven Bevel Gear	1	W2.5-02A-01-17-07	
34	Bearing 6307	1	GB/T276-94	
35	O Ring132×3.55	1	GB3452.1-92	
36	Gearbox Cover	1	W2.5-02A-01-17-02	2SBType1465Belt Only
37	Bolt M10×25	6	GB5783-86	
38	Washer 10	12	GB93-87	
39	Screw Stopper M10×1	2	JB/ZQ4450-86	
40	Washer, Seal 10	2	JB982-77	
41	Pulley	1	W2.5-02S-01-17-13	
42	Circlip for Shaft 100	1	GB/T894.1-86	
43	Key 7×30	1	GB1090-79	
44	Handle Assy	1	W2.5C-02-01-09-00	

Double Transmission Gearbox Assy (2SB Type1465 Belt Only)

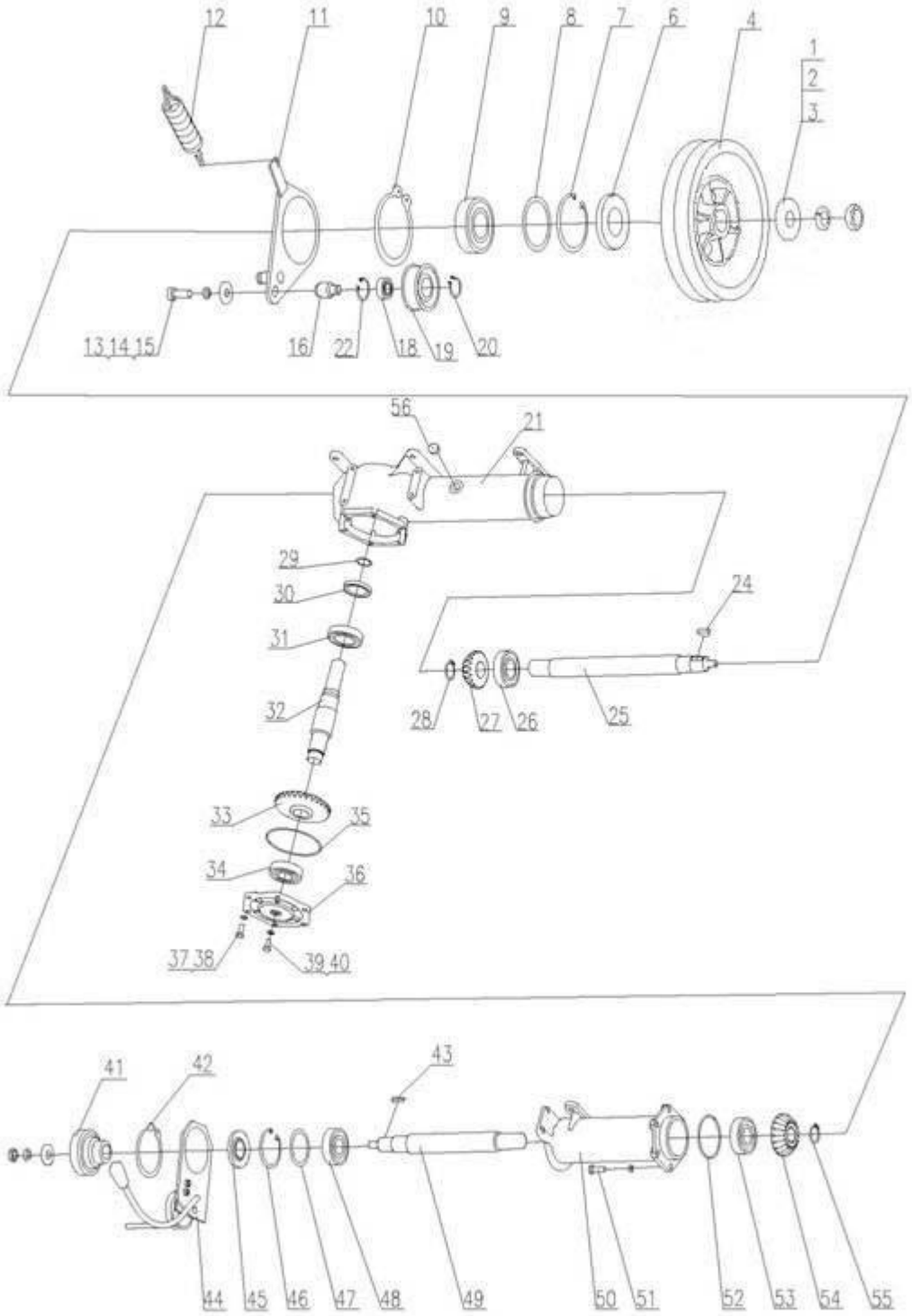

Double Transmission Gearbox Assy (2SB Type1465 Belt Only)

NO.	Description	QTY	Part Code	Note
45	Oil Seal 35×80×10	1	W2.5-02S-01-17-15	
46	Circlip for Bore, 80	1	GB/T893.1-86	
47	Washer, Adjusting	1	W2.5-02S-01-17-17	
48	Bearing 6307-RS	1	GB/T276-94	
49	Shaft	1	W2.5-02S-01-17-12	
50	Right Housing	1	W2.5-02S-01-17-01	
51	Bolt M10×30	6	GB5783-86	
52	O Ring 87.5×3.55	1	GB3452.1-82	
53	Bearing 6307	1	GB/T276-94	
54	Driven Bevel Gear	1	W2.5-02A-01-17-10	
55	Circlip for Shaft 35	1	GB/T894.1-86	
56	Stopper	1	W2.5-02S-01-17-08	

Double Transmission Gearbox Assy (SC Type1496 Belt Only)

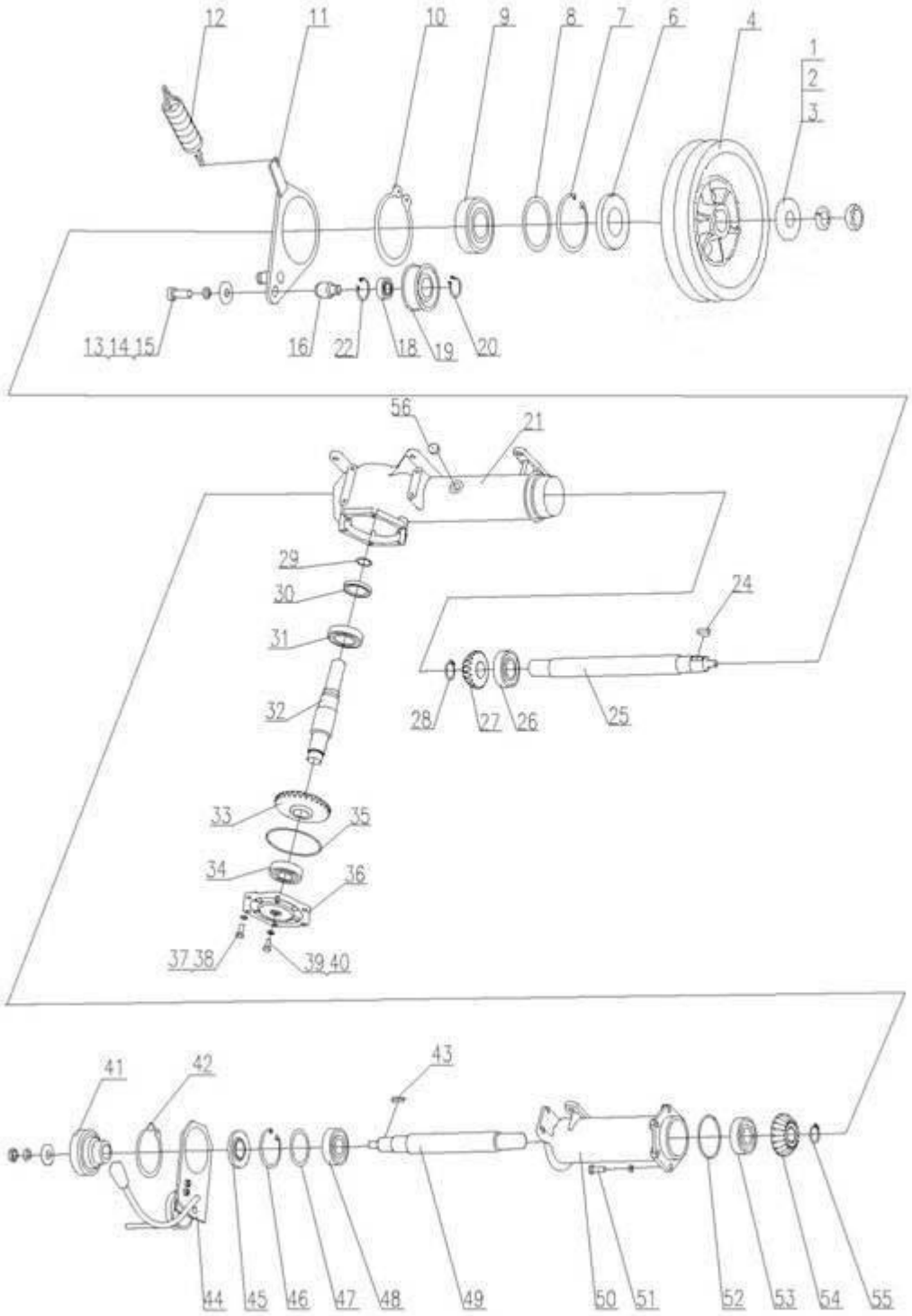

Double Transmission Gearbox Assy (SC Type1496 Belt Only)				
NO.	**Description**	**QTY**	**Part Code**	**Note**
1	Retaining Ring 17-45	2	W2.5-02A-01-17-04	
2	Gasket 16	2	GB/T93-87	
3	Nut M16×1.5	2	GB/T6171-86	
4	Pulley	1	W2.5K-02P-01-17-04	
6	Oil Seal40×90×10	1	W2.5-02A-01-17-11	
7	Circlip for Bore 90	1	GB/T893.1-86	
8	Washer, Adjusting	on demand	W2.5-02S-01-17-16	
9	Bearing 6308-RS	1	GB/T276-94	
10	Circlip for Shaft 110	1	GB/T894.1-86	
11	Tension Arm	1	W2.5K-02S-17-18-02-00	W2.5-02S-17-18-00 Work Tension Pulley Assy
12	Spring	1	W2.5-02-01-10-03	
13	Bolt M8×20	1	GB/T5783-86	
14	Washer 8	1	GB/T96-85	
15	Washer 8	1	GB/T93-87	
16	Shaft	1	W2.5-02A-01G-17-18-01-02	
18	Bearing 6202-2RS	1	GB/T276-86	
19	Pulley	1	W2.5-02A-01G-17-18-01-01	
20	Retaining Ring 15	1	GB/T894.1-86	
21	Left Housing		GB/T893.1-86	
22	Retaining Ring 35	1	W2.5-02S-01-17-03	
24	Key10×32	1	GB/T1099-79	
25	Main Transmission Shaft	1	W2.5-02S-01-17-05	
26	Bearing 6308	1	GB/T276-94	
27	Active Bevel Gear	1	W2.5-02A-01-17-06	
28	Circlip for Shaft 40	1	GB/T894.1-86	
29	O Ring 33.5×2.65	1	GB3452.1-82	
30	Oil Seal 45×68×10	1	W2.5-02S-01-17-14	
31	Bearing 6209	1	GB/T276-94	
32	Driven Shaft	1	W2.5-02S-01-17-09	
33	Driven Bevel Gear	1	W2.5-02A-01-17-07	
34	Bearing 6307	1	GB/T276-94	
35	O Ring132×3.55	1	GB3452.1-92	
36	Gearbox Cover	1	W2.5-02-01-17A-02	
37	Bolt M10×25	6	GB5783-86	
38	Washer 10	12	GB93-87	
39	Screw Stopper M10×1	2	JB/ZQ4450-86	
40	Washer, Seal 10	2	JB982-77	
41	Pulley	1	W2.5-02S-01-17-13	
42	Circlip for Shaft 100	1	GB/T894.1-86	
43	Key 7×30	1	GB1090-79	

Double Transmission Gearbox Assy (SC Type1496 Belt Only)

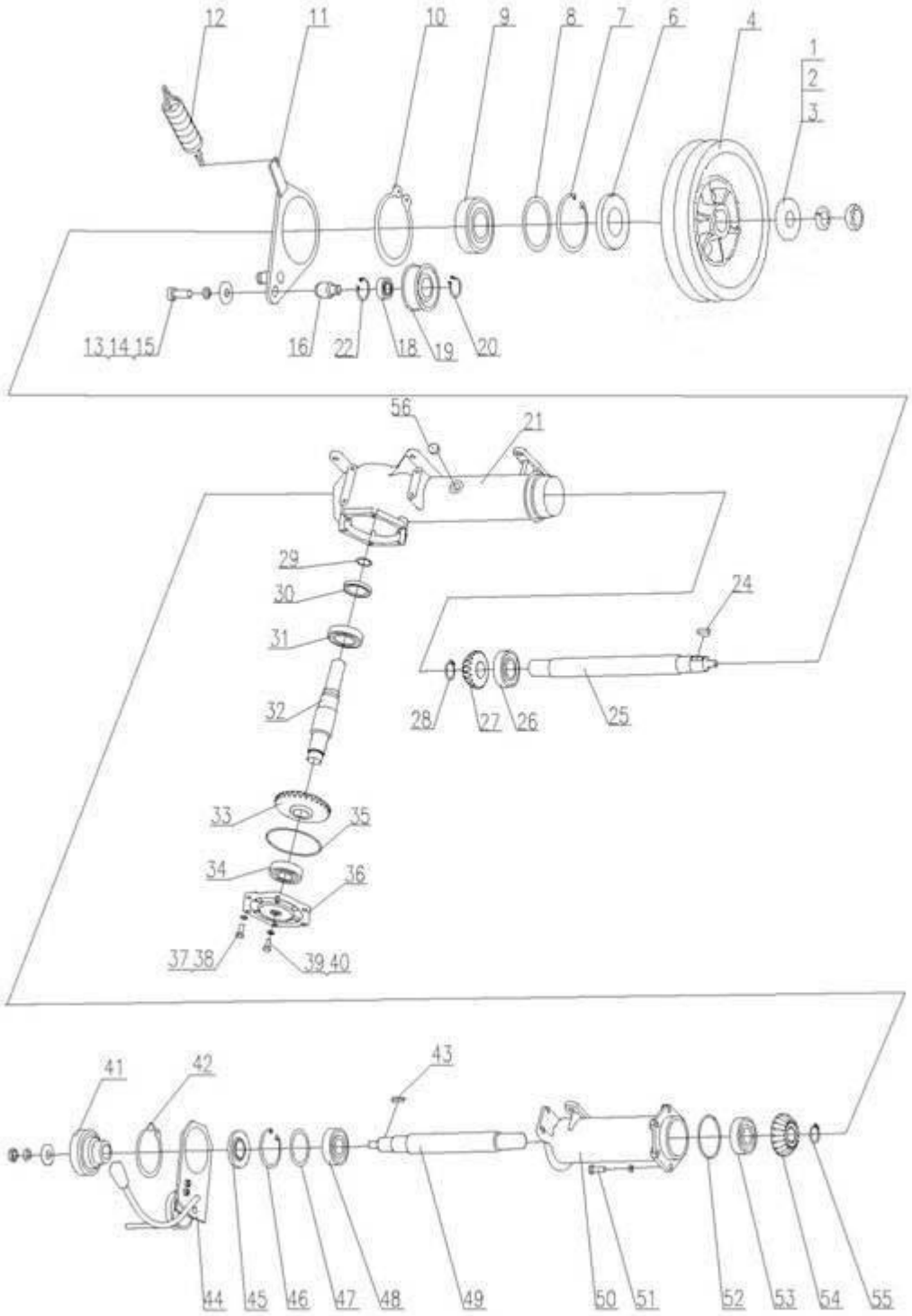

Double Convey Gearbox Assy(SC Type1496 Belt Only)

NO.	Description	QTY	Part Code	Note
44	Handle Assy	1	W2.5C-02-01-09-00	
45	Oil Seal 35×80×10	1	W2.5-02S-01-17-15	
46	Circlip for Shaft 80	1	GB/T893.1-86	
47	Washer, Adjusting	1	W2.5-02S-01-17-17	
48	Bearing 6307-RS	1	GB/T276-94	
49	Shaft	1	W2.5-02S-01-17-12	
50	Right Housing	1	W2.5-02S-01-17-01	
51	Bolt M10×30	6	GB5783-86	
52	O Ring 87.5×3.55	1	GB3452.1-82	
53	Bearing 6307	1	GB/T276-94	
54	Driven Bevel Gear	1	W2.5-02A-01-17-10	
55	Circlip for Shaft 35	1	GB/T894.1-86	
56	Stopper	1	W2.5-02S-01-17-08	

Handle Assy

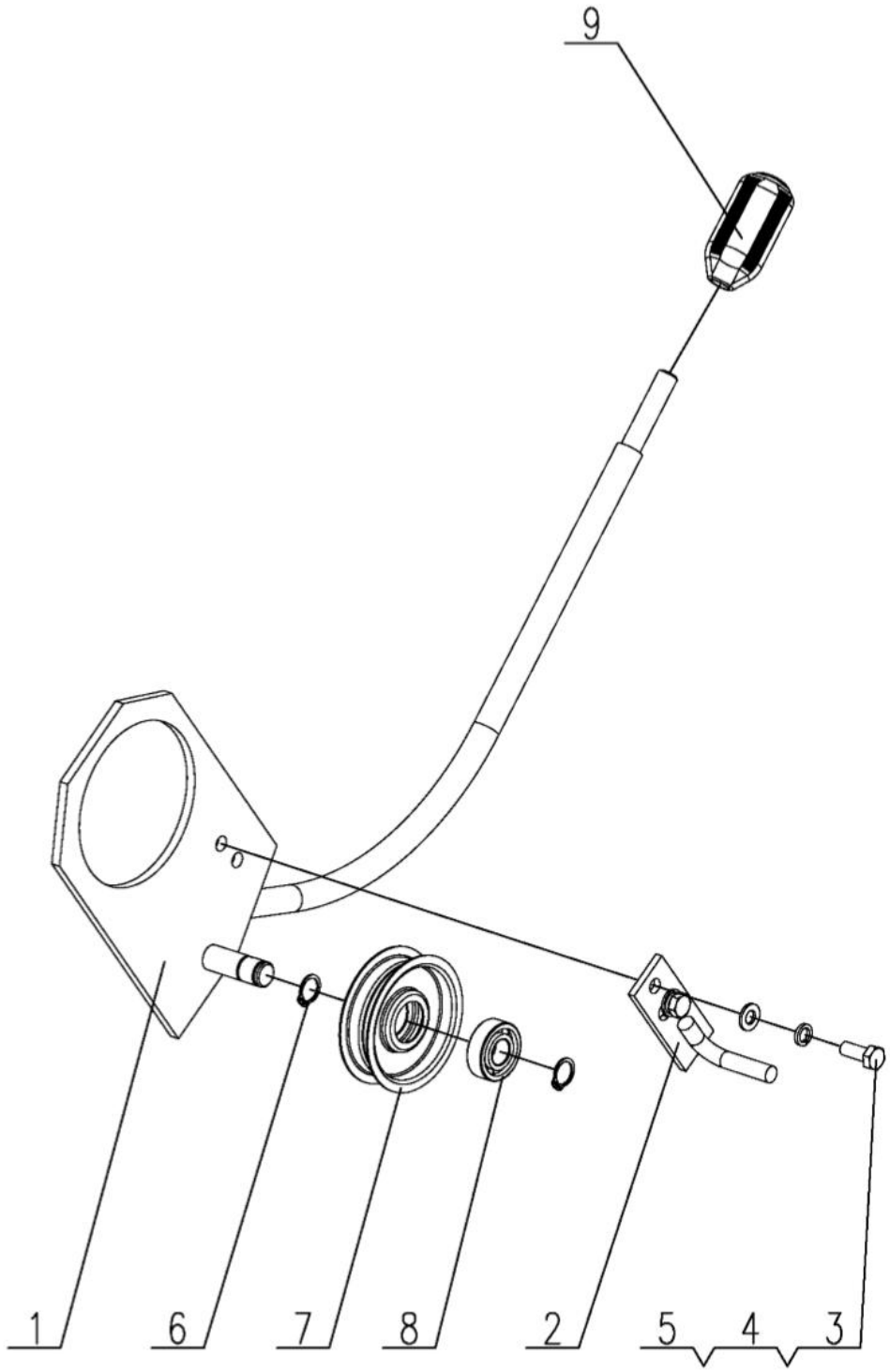

Handle Assy

NO.	Description	QTY	Part Code	Note
1	Handle Weld	1	W2.5C-02-01-09-01-00	
2	Rod (2.Throttle Control)	1	W2.5C-02-01-09-03-00	
2	Rod (2.Throttle Control)	1	W2.5-02-01-09-03A-00	
3	Retaining Ring 8	2	GB/T97.1-86	
4	Retaining Ring 8	2	GB/T93-86	
5	Bolt M8×20	2	GB/T5783-86	
6	Retaining Ring	2	GB/T894.1-86	
7	Roller	2	W2.5-02-01-09-02-01	W2.5-02-01-09-02-00 Tension Pulley Assy
8	Bearing 6202-2RS	1	GB/T276-82	
9	Clutch Handle	1	W2.5DA-07E-05-01	

Fan Assy

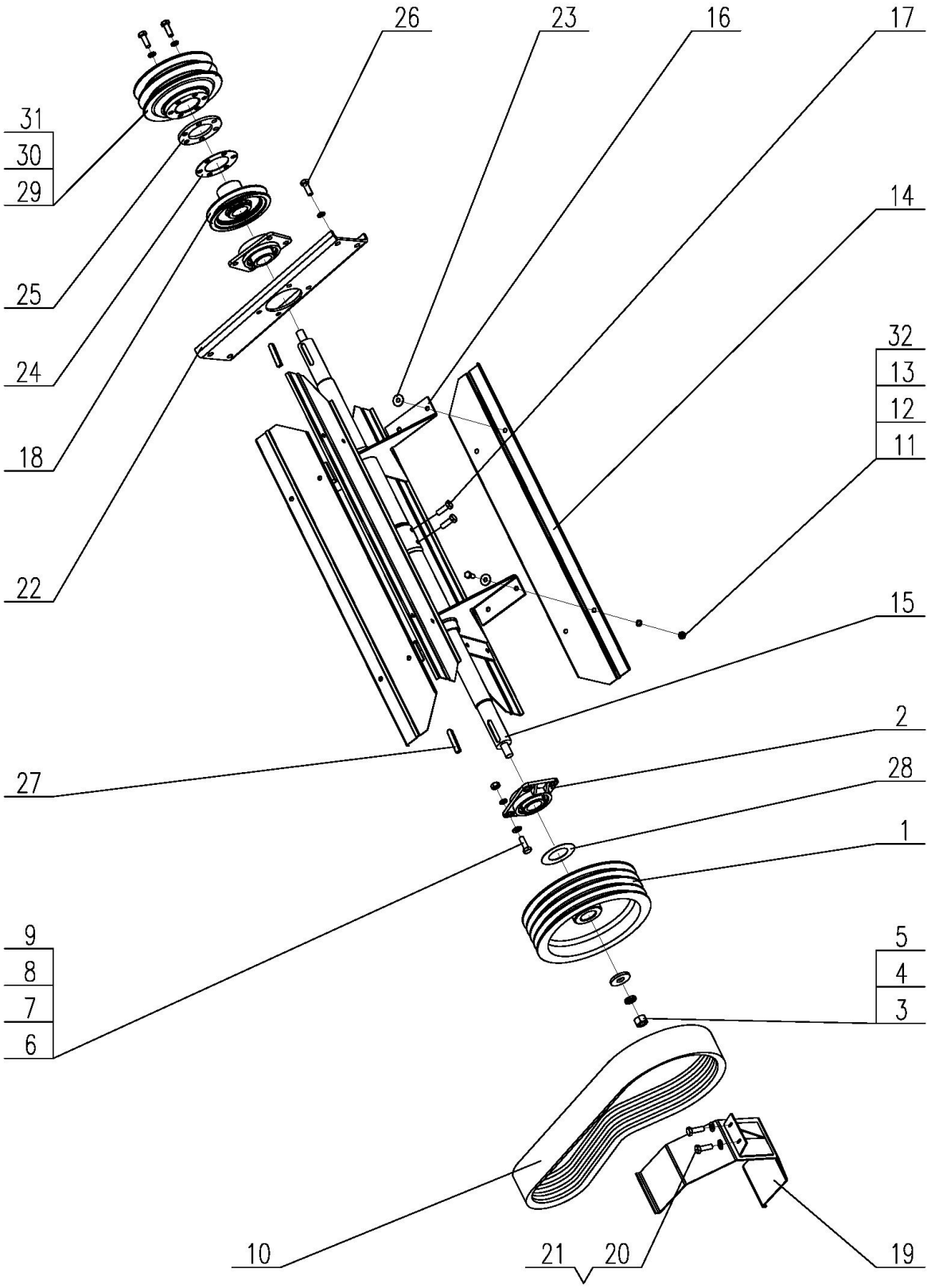
26
23
16
17
31
30
29
14
25
32
24
13
12
18
11
22
15
2
27
28
1
9
8
7
6
5
4
3
10
21
20
19

Fan Assy

NO.	Description	QTY	Part Code	Note
1	Belt Pulley, Fan	1	W2.5C-02-02-05-06A	
2	Bearing Seat	2	W2.5-02B-02-05-03-01	W2.5-02B-02-05-03-00 Bearing Combined
	Bearing UC207	2	W2.5-02B-02-05-03-02	
3	Retaining Ring	2	W2.5-02B-02-05-12	
4	Nut M16×1.5	2	GB6176-86	
5	Washer 16	2	GB93-87	
6	Bolt M10×30	8	GB5783-86	
7	Washer 10	8	GB97.1-85	
8	Washer 10	12	GB93-87	
9	Nut M10	4	GB6170-86	
10	Belt, Active Transmission, Fan	1	W2.5C-02-02-05-10A	4SB(4HB)1490
11	Bolt M8×20	12	GB5783-86	
12	Washer 8	18	GB93-87	
13	Nut M8	16	GB6170-86	
14	Blade, Fan	4	W2.5-02-02-05-08	
15	Shaft, Fan	1	W2.5P-02-02-05-01	
16	Frame Weld, Fan	1	W2.5-02B-02-05-07-00	
17	Bolt M10×1×20	4	GB5786-86	10.9
18	Hub	1	W2.5P-02-02-05-15	
19	Frame Assy	1	W2.5C-02-02-05-09-00	
20	Bolt M8×25	2	GB5783-86	
21	Washer 8	2	GB96-85	
22	Plate Weld, Fixing, Left	1	W2.5P-02-02-05-02-00	
23	Balance Block	on demand	W3.0B-02-09-01-03	
24	Washer, Adjusting	on demand	W2.5-02B-02-05-13	
25	Plate	1	W2.5P-02-02-05-19	
26	Bolt M10X25	4	GB5783-86	
27	Key C10×60	2	GB1096-79	
28	Spacer, Adjusting	on demand	WD.2F.15-08	
29	Washer 10	6	GB/T93-87	
30	Bolt M10X55	6	GB/T5783-86	
31	Belt Pulley	1	W2.5-02B-02-05-17	
32	Washer 8	16	GB96-85	

Impurity Assy

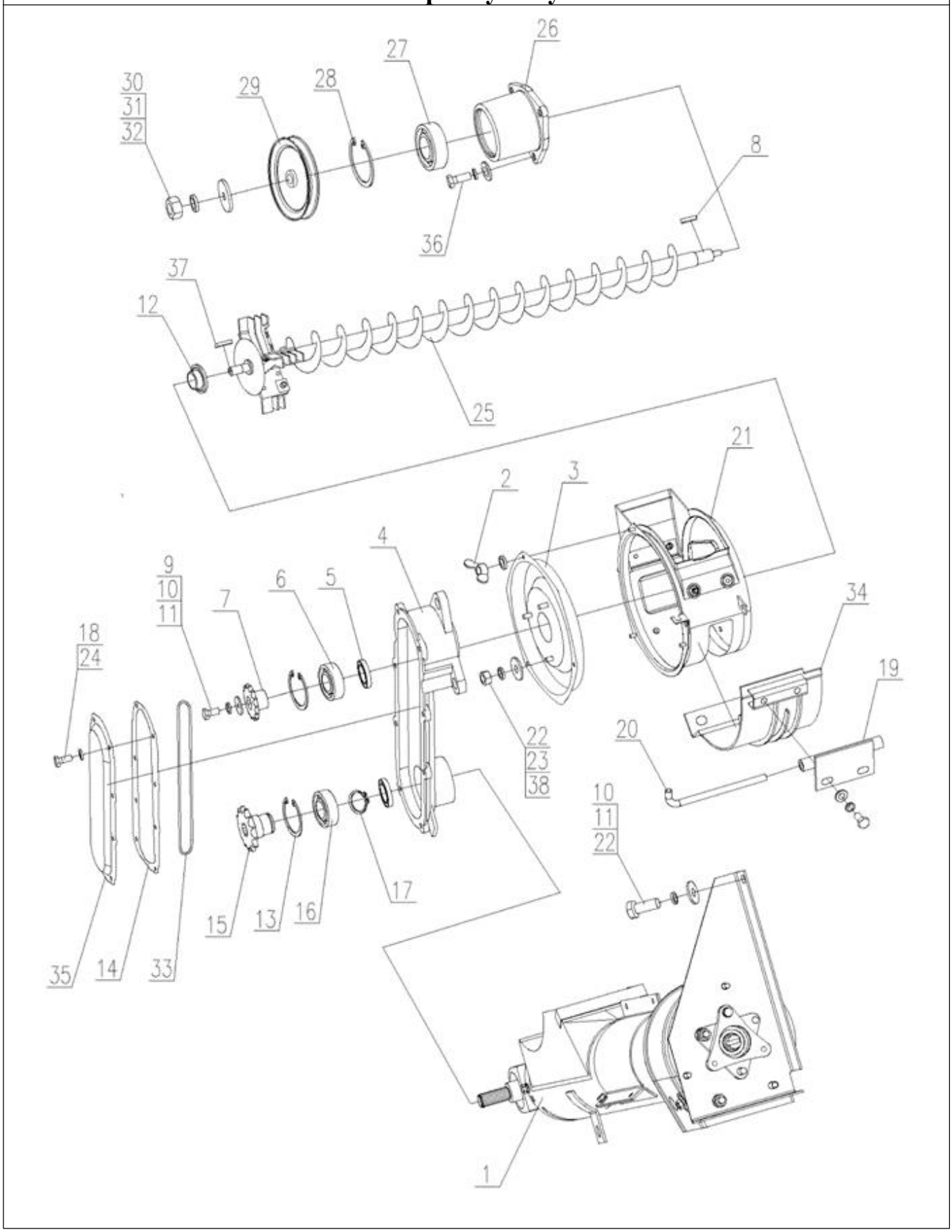

Impurity Assy

NO.	Description	QTY	Part Code	Note
1	Impurity Lifting Assy	1	W3.5H-02-11-01-00	
2	Nut M6	3	GB6170-86	
3	Cover Weld, Re-threshing	1	W2.0-02-11-03-06-00	
4	Chain Box	1	W2.0-02-11-14-01	W2.0-02-11-14-00 Chain Box Assy
5	Oil Seal (F) B25×40×7	2	GB/T13871-92	
6	Bearing 6204-2RS	1	W2.5P-02-02-11-07	
7	14 Chain Wheel	1	W2.0-02-11-07	
8	Key A6×22	1	GB/T1096-79	
9	Retaining Ring	1	W2.0-02-11-08	
10	Bolt M8×20	5	GB/T5783-86	
11	Washer 8	12	GB/T93-87	
12	Shaft Sleeve	1	W2.0-02-11-09	
13	Circlip for Bore 47	2	GB893.1-86	
14	Dust Proof Washer	1	W2.0-02-11-15	
15	13 Chain Wheel II	1	W2.0-02-11-10	
16	Bearing 6005-RS	1	GB/T276-94	
17	Circlip for Shaft 25	1	GB894.1-86	
18	Washer 6	8	GB/T93-87	
19	Pin Seat Weld	1	03A.05.07	
20	Pin Rod	1	03A.05-05	
21	Housing Assy , Re-threshing	1	W2.5-02-02-11-03-00	
22	Washer 8	12	GB/T96-85	
23	Nut M8	5	GB/T6170-86	
24	Bolt M6×16	8	GB/5783-86	
25	Horizontal Auger Assy	1	W3.5H-02-11-02-00	
26	Bearing Seat (II)	1	W2.5-02-02-11-04	
27	Bearing 6304-2RS	1	W2.5-02-02-10-16	
28	Washer 52, Hole	1	GB893.1-86	
29	Belt Pulley, Impurity	1	W2.5P-02-02-11-05	
30	Washer 12	1	GB/T96-85	
31	Washer 12	1	GB/T93-87	
32	Nut M12×1.25	1	GB/T6176-86	
33	Chain, Impurity Auger	1	W2.5-02-02-11-06	
34	Plate Weld	1	03A.05.06	
35	Cover, Chain Box	1	W2.0-02-11-13	
36	Bolt M8×16	3	GB/T5783-86	
37	Key C6×25	1	GB/T1096-79	

Impurity Lifting Assy

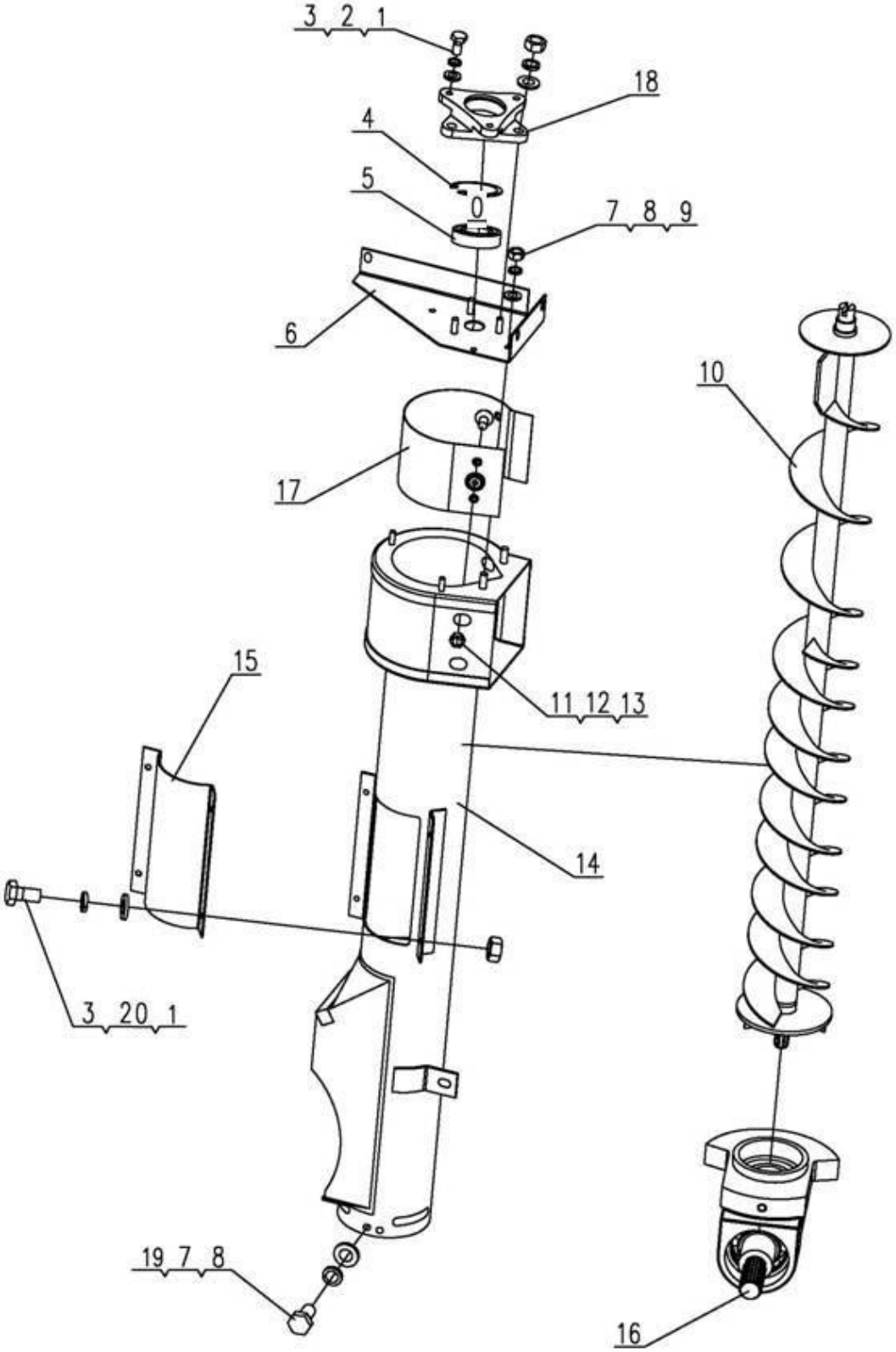

Impurity Lifting Assy

NO.	Description	QTY	Part Code	Note
1	Bolt M6×16	7	GB/T5783-86	
2	Washer 6	13	GB/T97.1-86	
3	Washer 6	9	GB/T93-87	
4	Circlip 40	1	GB893.1-86	
5	Bearing 6203-2RS	1	GB/T276-94	
6	2# Plate Weld, Vertical	1	W2.5-02-02-11-01-02-00	
7	Washer 8	8	GB/T97.1-85	
8	Washer 8	8	GB/T93-87	
9	Nut M8	5	GB/T6170-86	
10	Auger Weld,Impurity Lifting	1	W3.5H-02-11-01-07-00	
11	Bolt M6×16	4	GB/T819-85	
12	Washer	4	W2.0-02-11-02-04	
13	Nut M6	10	GB/T6170-86	
14	Housing Weld, Impurity Lifting Auger	1	W3.5H-02-11-01-01-00	
15	Cover Weld	1	W2.5-02-02-11-01-06-00	
16	Gearbox Assy , Impurity	1	W2.5-02-02-11-01-09-00	
17	Plate (2#)	1	W2.5K-02PX-02-11-01-08	
18	Bearing Seat(2#Auger)	1	WD-150A-03A.05.10-03	
19	Bolt M8×16	3	GB/T5783-86	
20	Washer 6	4	GB/T96-85	

Re-thresher Housing Assy

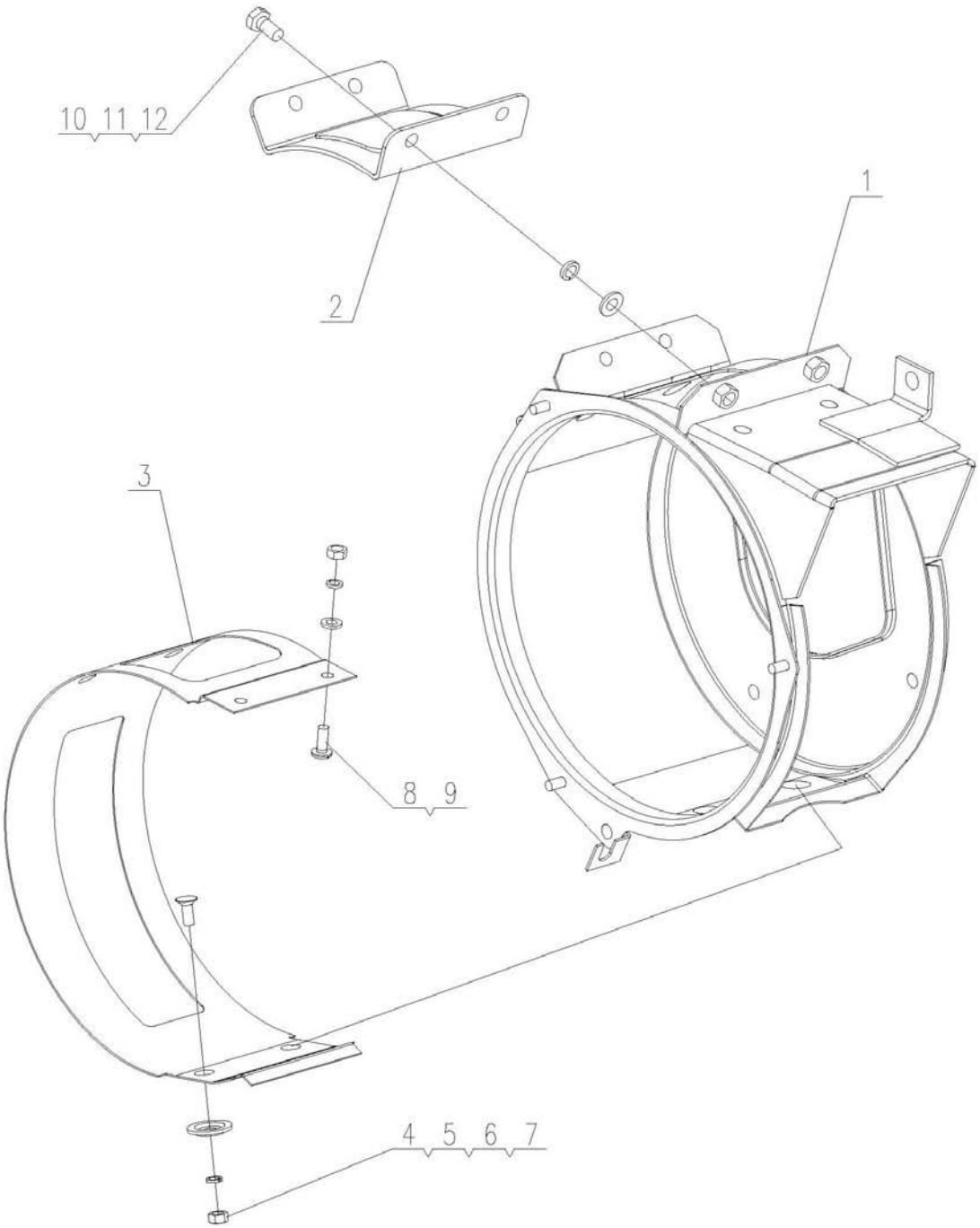

Re-thresher Housing Assy

NO.	Description	QTY	Part Code	Note
1	Housing Weld, Re-threshing	1	W2.5-02-02-11-03-01-00	
2	Cover Weld, Observe	1	WD-150A-03A.05.09.02	
3	Inner Plate	1	WD-150A-03A.05.09-01	
4	Bolt M6×16	4	GB/T819.1-2000	
5	Washer	4	WD-150-03.04-20	
6	Washer 6	6	GB/T93-87	
7	Nut M6	6	GB/T6170-86	
8	Bolt M6×16	2	GB/T67-2000	
9	Washer 6	2	GB/T97.1-85	
10	Bolt M8×16	4	GB/T5783-86	
11	Washer 8	4	GB/T97.1-85	
12	Washer 8	4	GB/T93-87	

Horizontal Auger Assy

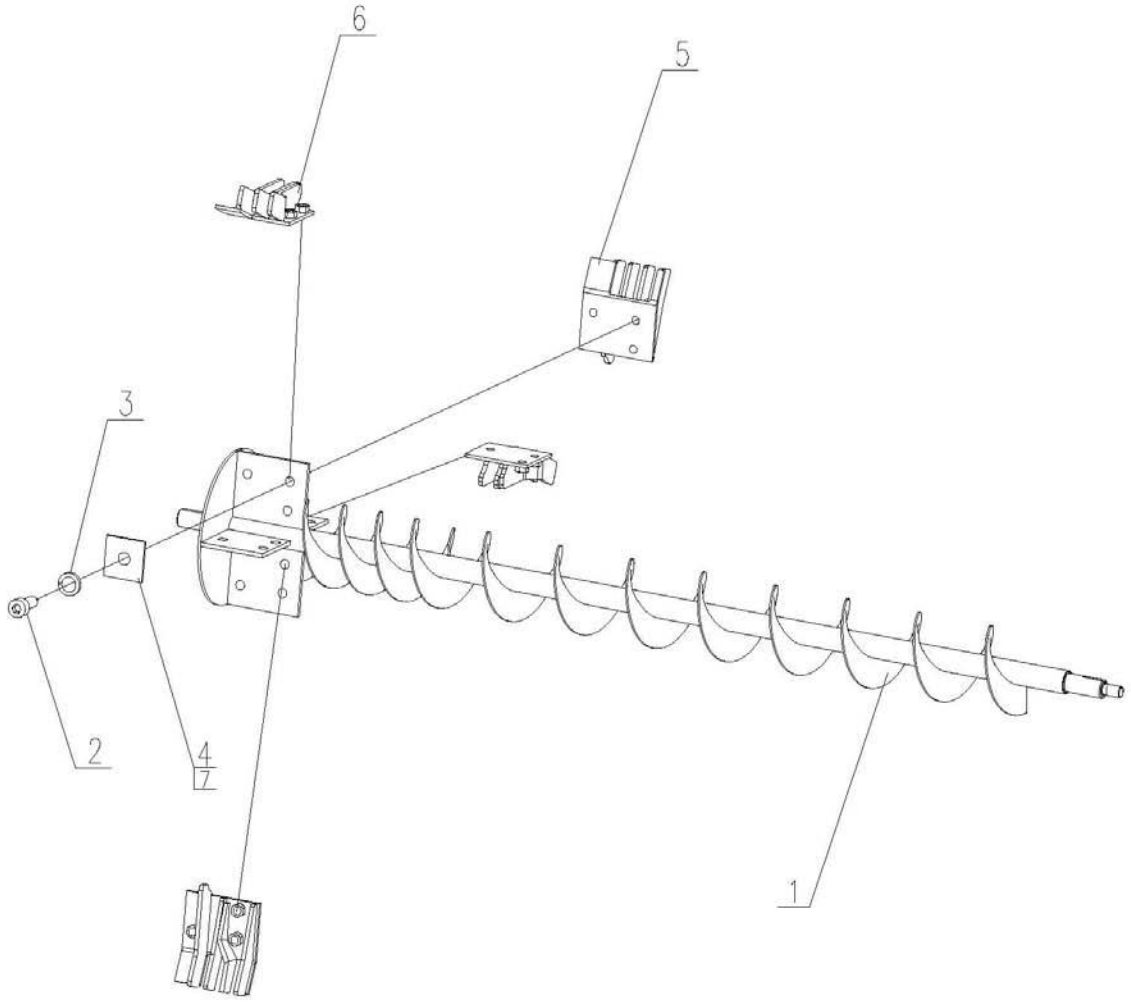

Horizontal Auger Assy

NO.	Description	QTY	Part Code	Note
1	Horizontal Auger Assy	1	W3.5H-02-11-02-01-00	
2	Bolt M8×20	12	GB/T70-85	
3	Cushion 8	12	GB/T93-87	
4	Balance Block	on demand	QT007-2009	
5	Re-threshing teeth Weld (I)	2	WD-150A-03A.05.02	
6	Re-threshing teeth Weld (II)	2	WD-150A-03A.05.03	
7	Balance Block	on demand	W2.5-02-56-07-20	

Impurity Gearbox Assy

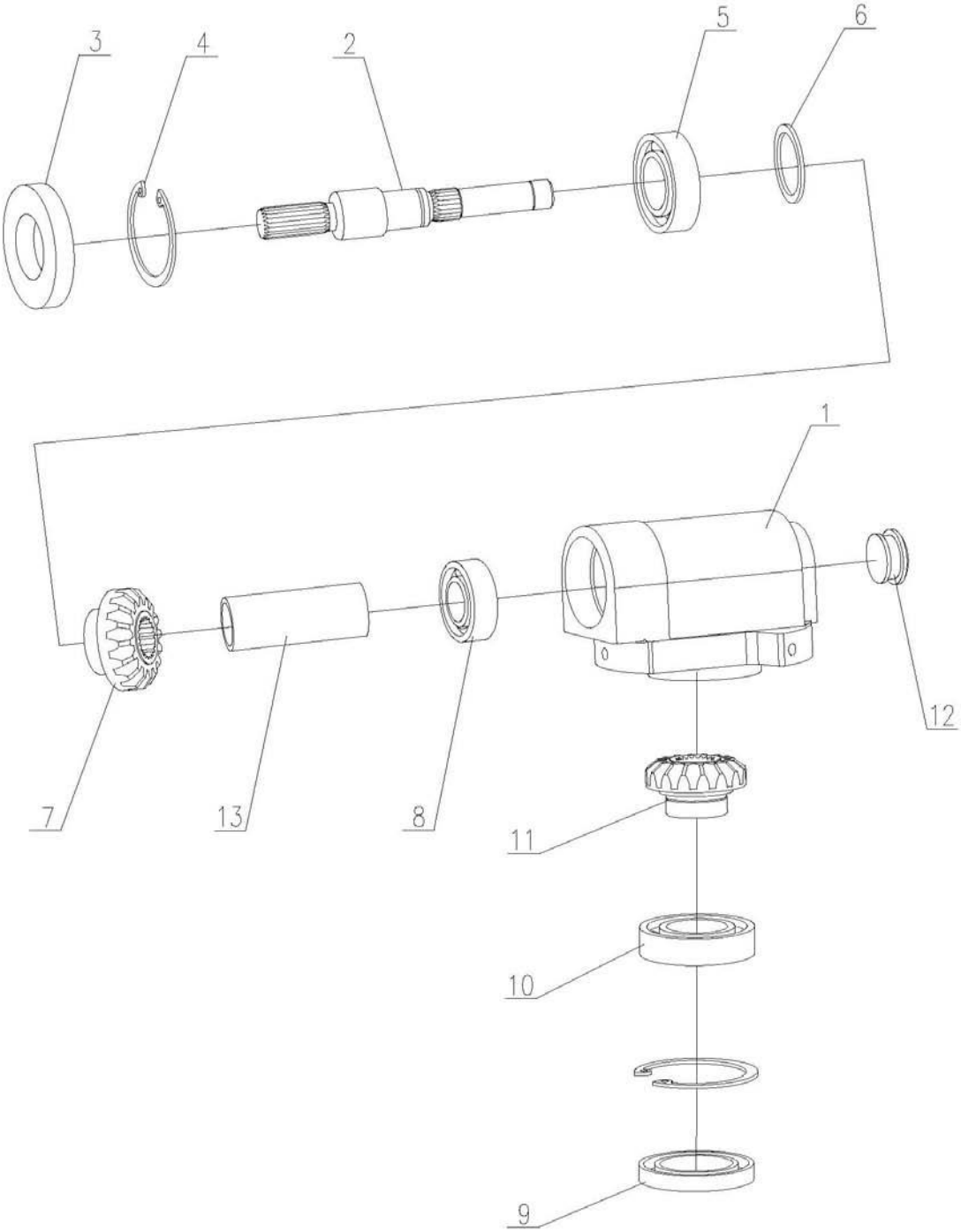

Impurity Gearbox Assy

NO.	Description	QTY	Part Code	Note
1	Housing, Impurity Gearbox	1	WD-150A-03.05.10.01-01A	
2	Input Shaft	1	WD-150A-03A.05.10.01-01	
3	Seal Ring 25×47×7	1	GB/T13871-92	
4	Retaining Ring 47	2	GB/T893.1-86	
5	Bearing 6204-RS	1	GB/T276-94	
6	Retaining Ring 20	1	GB/T894.1-86	
7	Bevel Gear	1	WD-150-03.05.10.01-03	
8	Bearing 6002-RS	1	GB/276-94	
9	Seal Ring 30×47×7	1	GB/T13871-92	
10	Bearing 6005-RS	1	W2.5-02-02-11-01-09-04	
11	Bevel Gear	1	WD-150-03.05.10.01-04	
12	Stopper	1	WD-150-03.05.10.01-05	
13	Sleeve	1	WD-150A-03A.05.10.01-02	

Vibration Sieve Assy

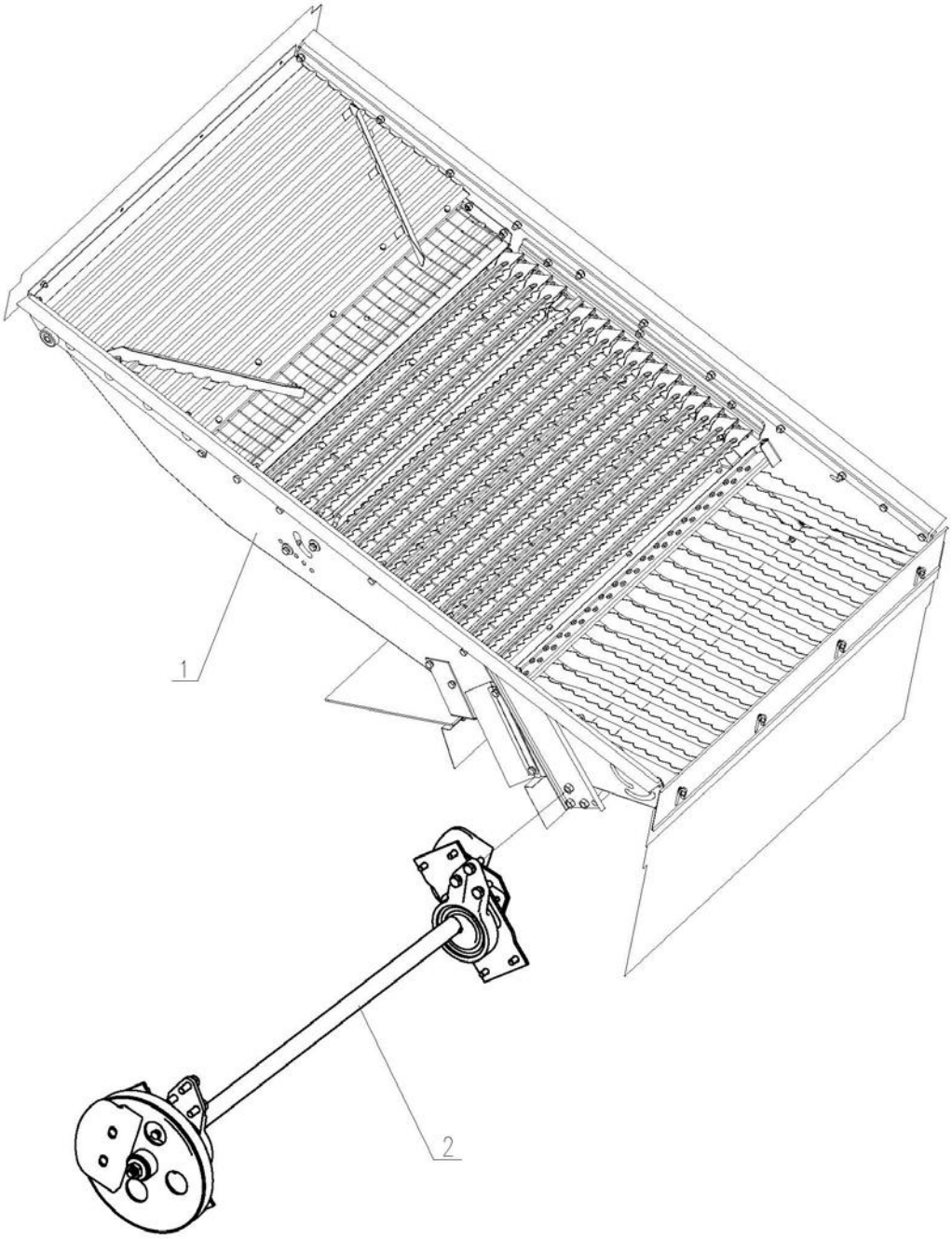

Vibration Sieve Assy

NO.	Description	QTY	Part Code	Note
1	Vibration Sieve Assy	1	W2.5-02G-02-13B-01-00	
2	Vibration Sieve Driving Assy	1	W2.5P-02-02-13-02-00	

Vibration Sieve Assy

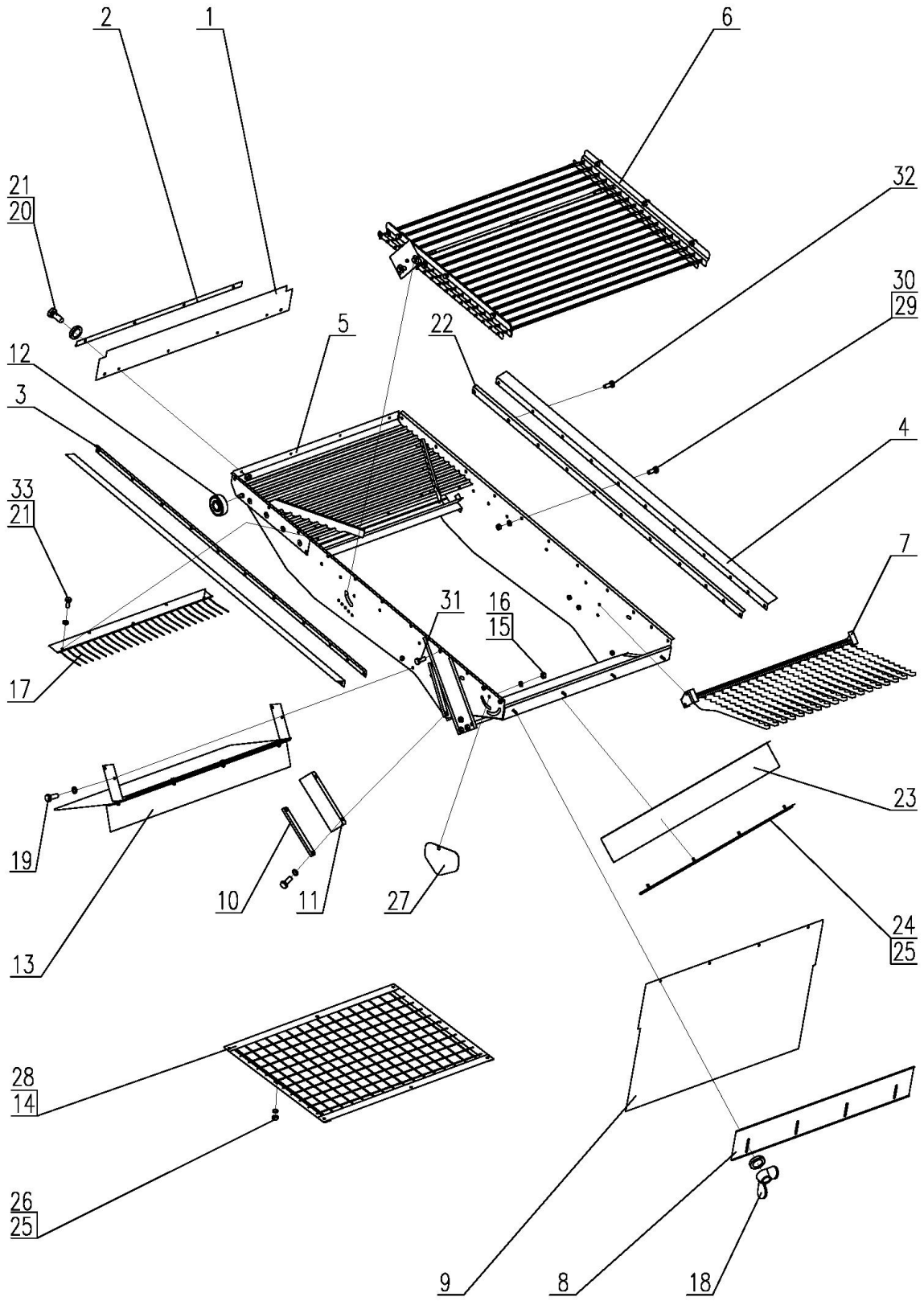

Vibration Sieve Assy

NO.	Description	QTY	Part Code	Note
1	Canvas, Sieve Box, Front	1	W2.5-02-02-13-01-04	
2	Press Plate	1	W2.5-02-02-13-01-05	
3	Press Plate, Left	1	W2.5-02G-02-13B-01-06	
4	Canvas, Sieve Box, 1	2	W2.5-02G-02-13B-01-07	
5	Sieve Box Weld	1	W2.5-02G-02-13B-01-01-00	
6	Sieve Assy , Upper	1	W2.5-02G-02-13C-01-02-00	
7	Sieve Assy , Rear	1	W2.5-02G-02-13B-01-03-00	
8	Baffle Plate, Rear	1	W2.5-02-02-13-01-09	
9	Canvas	1	W2.5-02-02-13-01-10	
10	Press Plate	2	W2.5-02-02-13-01-01-12	
11	Canvas, Sieve Box, 2	2	W2.5-02-02-13-01-11	
12	Bearing 6301-2RS	2	W2.5-02G-02-13-01-24	
13	Separating Plate, Lower	1	W2.5-02G-02-13B-01-12-00	
14	Strainer Mesh Weld (13)	1	W2.5-02G-02-13B-01-14-00	
15	Nut M8	3	GB/T6170-86	
16	Washer 8	12	GB/T93-87	
17	Sieve, Rear	1	W2.5-02-02-13-01-16-00	
18	Nut M6	4	GB/T62-88	
19	Bolt M8X20	12	GB/T5783-86	
20	Bolt M6X16	4	GB/T5783-86	
21	Washer 6	47	GB/T93-87	
22	Press Plate, Right	1	W2.5-02G-02-13B-01-19	
23	Canvas, Sieve Box, 2	1	W2.5-02G-02-13-01-20	
24	Press Plate Weld	1	W2.5-02G-02-13-01-21-00	
25	Nut M6	38	GB/T6170-86	
26	Washer	10	W2.5P-02-02-10-05-03	
27	Baffle Plate	1	W2.5-02-02-13-01-22	
28	Strainer Mesh Weld (16)	1	W2.5-02G-02-13B-01-14A-00	In Tool Box
29	Bolt M6×20	6	GB/T5783-86	
30	Washer 6	24	GB/T96-85	
31	Bolt M6×25	4	GB/T5783-86	
32	Bolt M6×18	16	GB/T5783-86	
33	Bolt M6×12	5	GB/T5783-86	

Vibration Sieve Assy

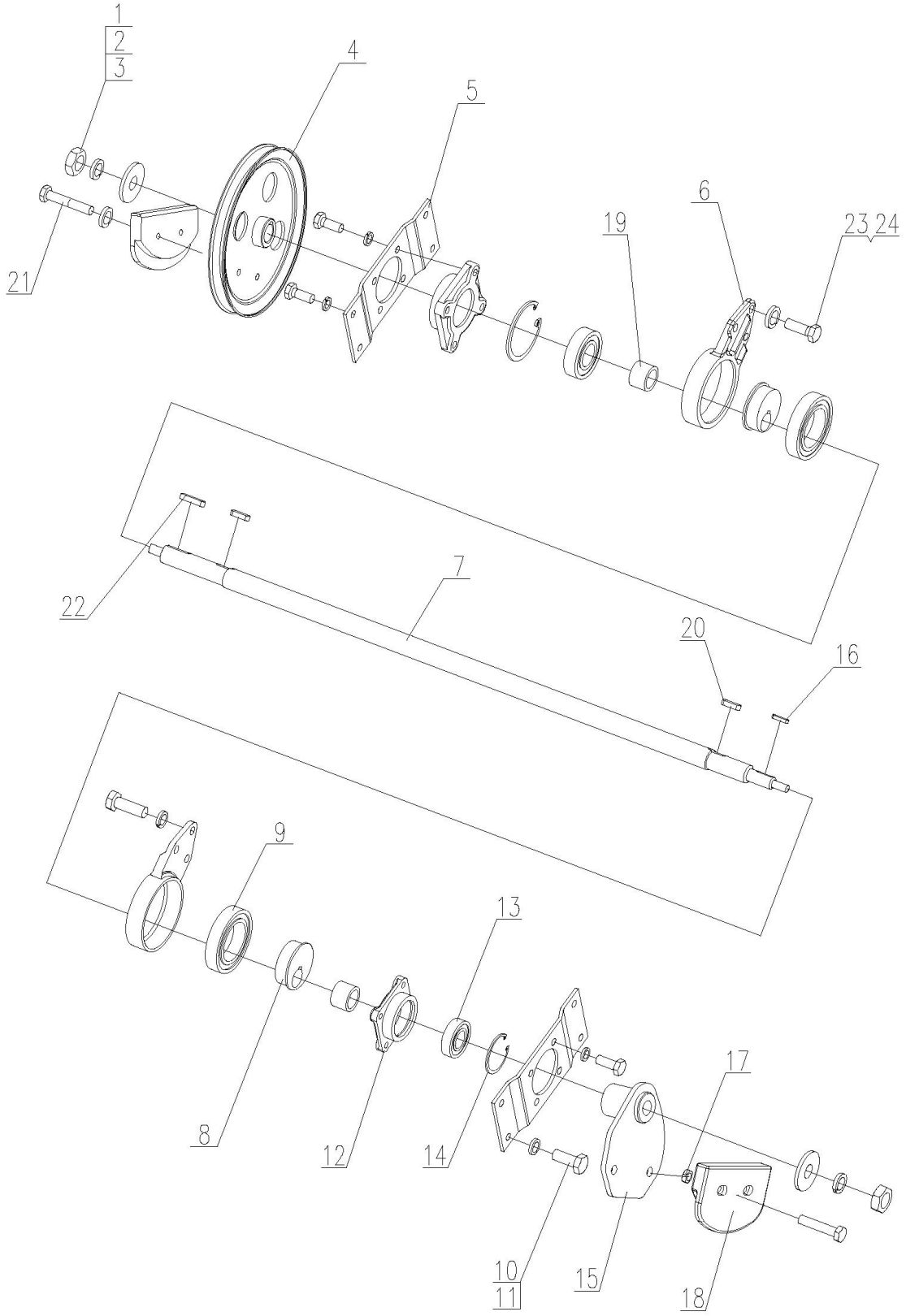

Vibration Sieve Assy

NO.	Description	QTY	Part Code	Note
1	Nut M12×1.25	2	GB/T6171-86	
2	Washer 12	2	GB/T96-85	
3	Washer 12	2	GB/T93-87	
4	Belt Pulley, Vibration Sieve	1	W2.5P-02-02-13-02-07-00	
5	Plate	2	W2.5-02B-02-13-02-04	
6	Bearing Seat	2	W2.0-02-13-01-03	
7	Shaft	1	W2.5-02B-02-13-02-01	
8	Eccentric Roller	2	W2.0-02-13-01-08	
9	Bearing 6012-2RS	2	GB/T 276-94	
10	Washer 8	20	GB/T93-87	
11	Bolt M8×20	16	GB/T5783-86	
12	Bearing Seat	2	W2.5-02B-02-13-02-03	
13	Bearing 6205-2RZ	2	GB/T276-94	
14	Circlip for Bore 52	2	GB/T893.1-86	
15	Connecting Plate Weld	1	W2.5P-02-02-13-02-05-00	
16	Key A5×25	1	GB/T1096-79	
17	Nut M8	4	GB/T6170-87	
18	Counter Weight	2	W2.5P-02-02-13-02-09-00	
19	Shaft Sleeve	2	W2.5-02B-02-13-02-08	
20	Key A8×28	2	GB/T1096-79	
21	Bolt M8×30	4	GB/T5782-86	
22	Key A8×32	1	GB/T1096-79	
23	Bolt M10×30	6	GB/T5783-86	10.9
24	Cushion10	6	GB/T93-87	

Upper Sieve Assy

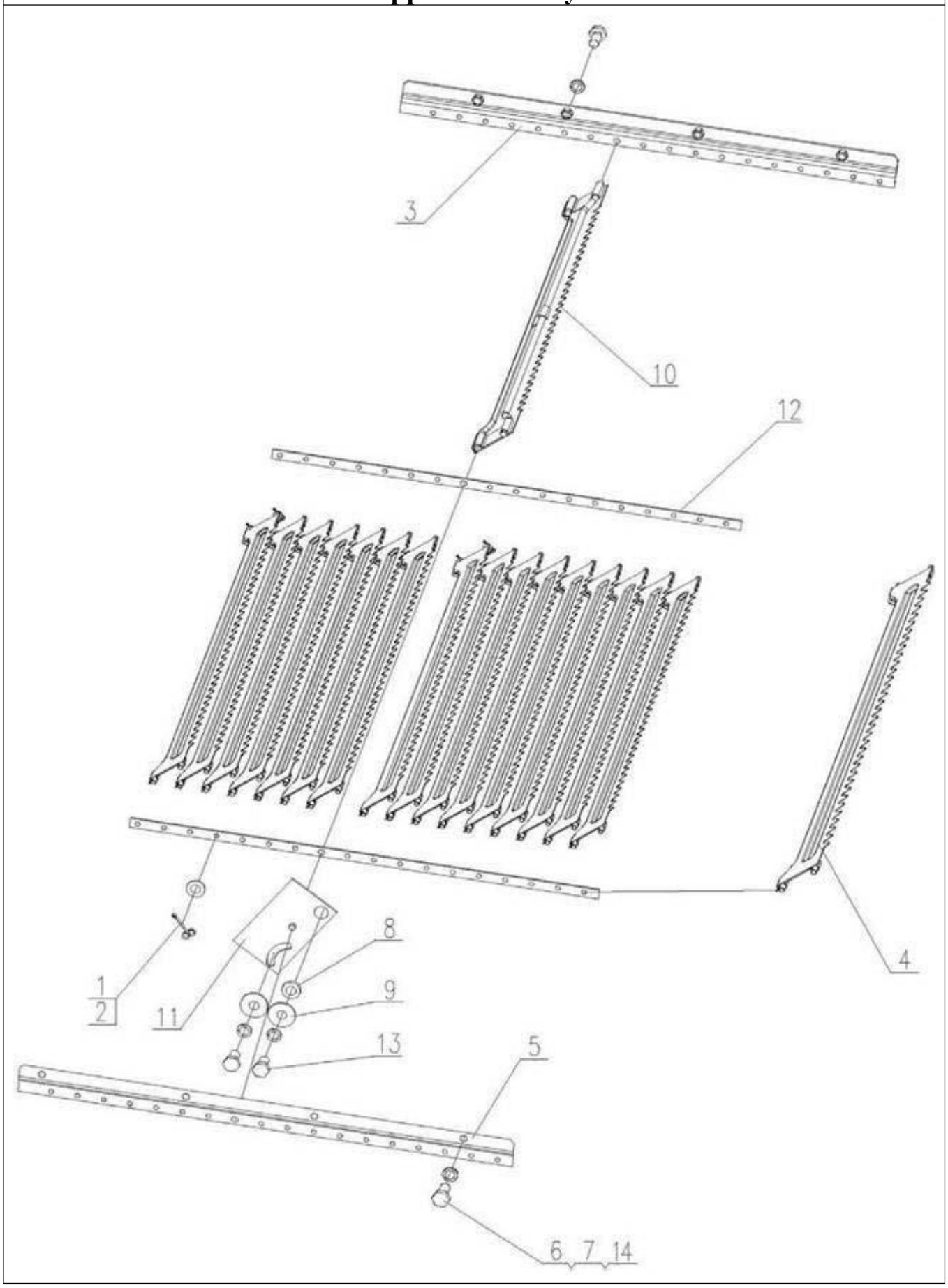

Upper Sieve Assy

NO.	Description	QTY	Part Code	Note
1	Washer 6	68	GB/T97.1-85	
2	Pin1.6×16	68	GB/T1220-84	Stainless Steel Pin
3	Connecting Plate	1	W2.5-02G-02-13C-01-02-01-01	
4	Sieve Plate (1)	17	W2.5-02-02-13-01-02-02-00	
5	Connecting Plate	1	W2.5-02G-02-13C-01-02-03-01	
6	Bolt M8×18	8	GB/T5783-86	
7	Washer 8	10	GB/T93-87	
8	Plate	1	W2.5-02-02-13-01-02-07	
9	Washer 8	2	GB/T96-85	
10	Sieve Plate (2)	1	W2.5-02-02-13-01-02-04-00	
11	Plate Weld, Adjusting	1	W2.5-02-02-13-01-02-05-00	
12	Plate	2	W2.5-02G-02-13C-01-02-06	
13	Bolt M8×16	2	GB/T5783-86	
14	Nut M8	8	GB/T6170-86	

Rear Sieve Assy

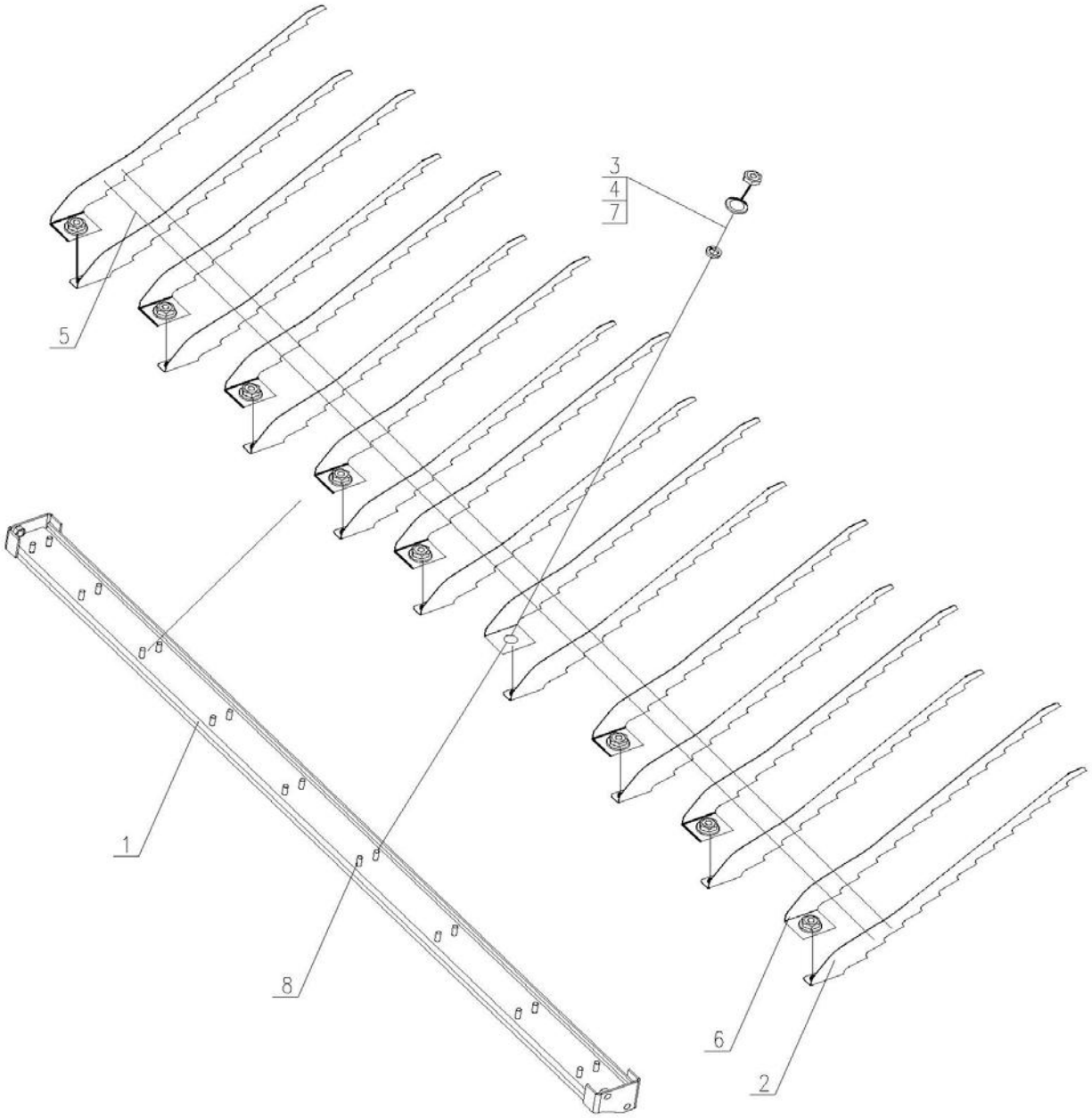

Rear Sieve Assy

NO.	Description	QTY	Part Code	Note
1	Sieve Seat Weld	1	W2.5-02G-02-13B-01-03-01-00	
2	Sieve, Left	9	W2.5-02G-02-13B-01-03-02	
3	Nut M6	18	GB/T6170-86	
4	Washer 6	18	GB/T93-87	
5	Steel Wire	2	W2.5-02-02-13-01-03-03	
6	Sieve, Right	9	W2.5-02G-02-13B-01-03-03	
7	Washer, Big 6	18	GB/T96-85	
8	Bolt M6X16	18	GB/T5783-86	

Lower Separating Plate Assy

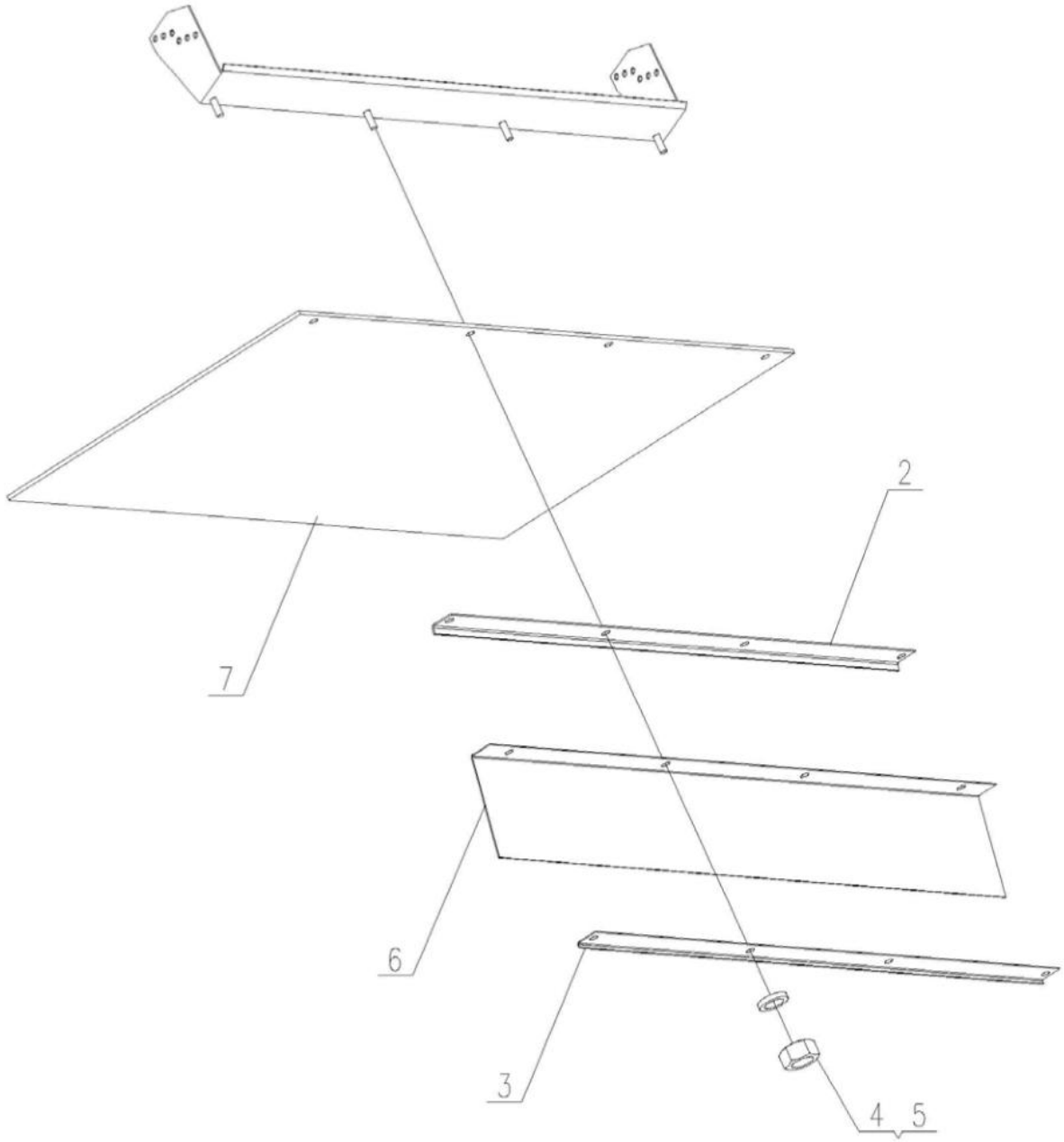

Lower Separating Plate Assy

NO.	Description	QTY	Part Code	Note
1	Connecting Plate Weld, Lower	1	W2.5-02-02-13-01-12-01-00	
2	Press Plate	1	W2.5-02-02-13-01-12-02	
3	Press Plate	1	W2.5-02-02-13-01-12-03	
4	Washer 6	4	GB/T93-87	
5	Nut M6	4	GB/T6170-86	
6	Fiber Plate	1	W2.5-02-02-13-01-12-04	
7	Canvas (1)	1	W2.5-02G-02-13B-01-12-05	

Tension Pulley Assy

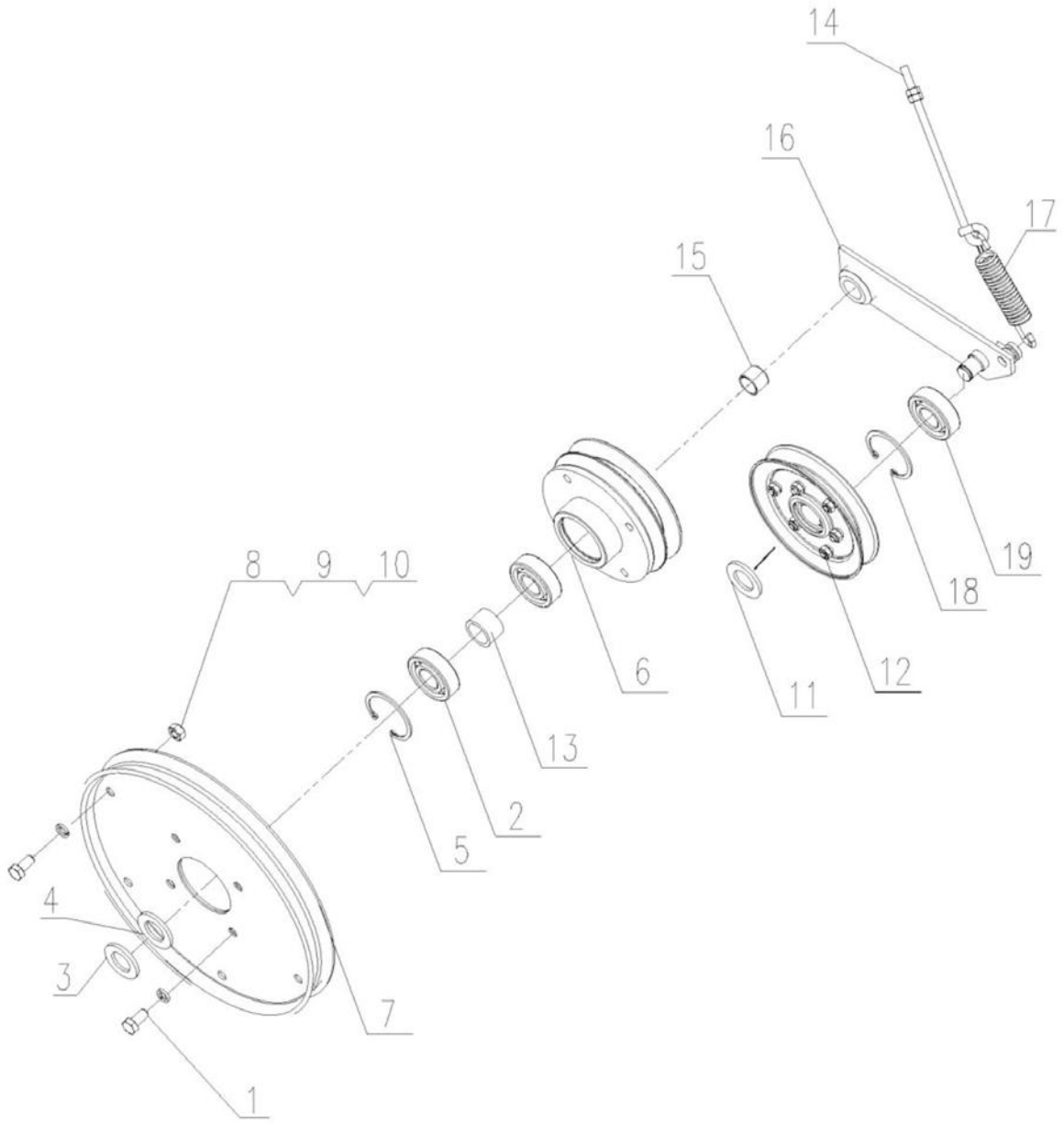

Tension Pulley Assy

NO.	Description	QTY	Part Code	Note
1	Bolt M8×18	4	GB5783-86	
2	Bearing 6204-RS	2	GB/T276-86	
3	Washer	1	W2.5-02-02-12-06	
4	Retaining Ring 20	1	GB/T894-86	
5	Retaining Ring 47	1	GB/T893.1	
6	Belt Pulley	1	W2.5P-02-02-12-02	
7	Transition Wheel	2	W2.5P-02-02-12-01	
8	Bolt M8×16	6	GB5783-86	
9	Nut M8	8	GB6170-86	
10	Washer 8	10	GB93-87	
11	Retaining Ring 15	1	GB/T894-86	
12	Belt Pulley Assy	1	W2.5P-02-02-12-04-00	
13	Shaft Sleeve	1	W2.5-02-02-12-05	
14	Tension Bolt	1	W2.5P-02-02-10-09	
15	Bearing (1620)	1	W2.5-02-01-14-05	
16	Frame Weld, Tension	1	W2.5P-02-02-12-03-00	
17	Spring, Shaking	1	W2.5-02-02-12-03	
18	Washer 42	1	GB/T893.1	
19	Bearing 6302-2RS	1	W2.5P-02-02-12-08	

Main Clutch Tension Assy

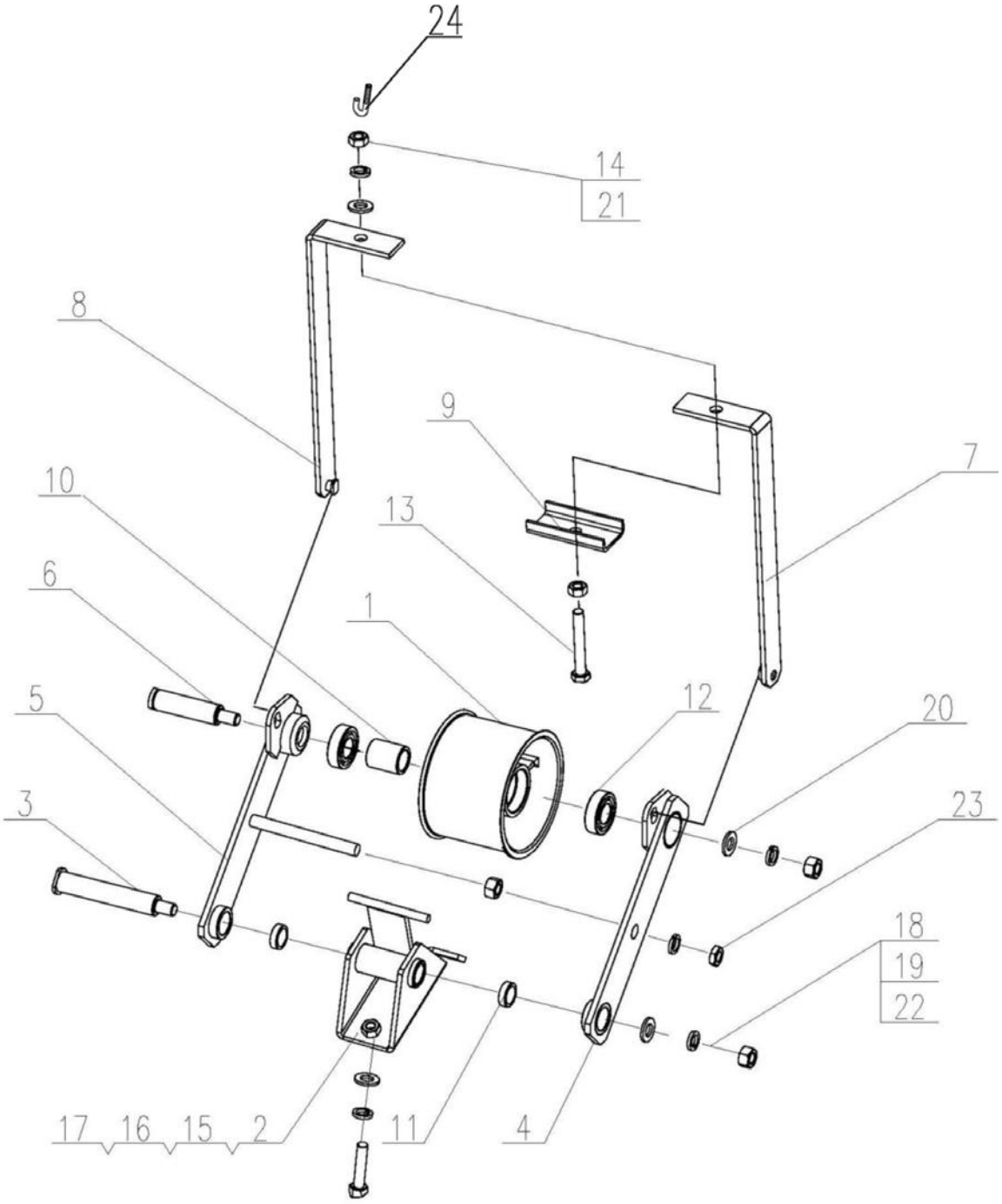

Main Clutch Tension Assy

NO.	Description	QTY	Part Code	Note
1	Tension Pulley, Main Clutch	1	W2.5C-02-02-22C-01	
2	Connecting Seat Weld	1	W2.5C-02-02-22C-02-00	
3	Shaft	1	W2.5C-02-02-22C-03	
4	Support Arm Weld, Left	1	W2.5C-02-02-22C-04-00	
5	Support Arm Weld, Right	1	W2.5C-02-02-22C-05-00	
6	Shaft	1	W2.5C-02-02-22C-06	
7	Plate Weld, Left	1	W2.5C-02-02-22C-07-00	
8	Plate Weld, Right	1	W2.5C-02-02-22C-08-00	
9	Support Plate	1	W2.5C-02-02-22C-09	
10	Sleeve	1	W2.5C-02-02-22C-10	
11	Bearing (1620)	2	W2.5C-02-02-22C-11	
12	Bearing 6004-RS	2	W2.5C-02-02-22C-12	
13	Stretch Rod	1	W2.5C-02-02-22C-14	Canopy Type
	Stretch Rod	1	W2.5C-02-02-22E-01	Cabin Type
14	Nut M10	2	GB6170-86	
15	Bolt M10×30	2	GB5783-86	10.9
16	Washer 10	2	GB96-85	
17	Washer 10	3	GB93-87	
18	Nut M12	3	GB6170-86	
19	Washer 12	3	GB93-87	
20	Retaining Ring (12)	1	WD-150-03.14.01-05	
21	Washer 10	2	GB97.1-85	
22	Washer 12	1	GB96-85	
23	Nut M12	1	GB6172-86	
24	Hook	1	W2.5C-02-02-22C-13	Canopy Type

Support Frame Assy

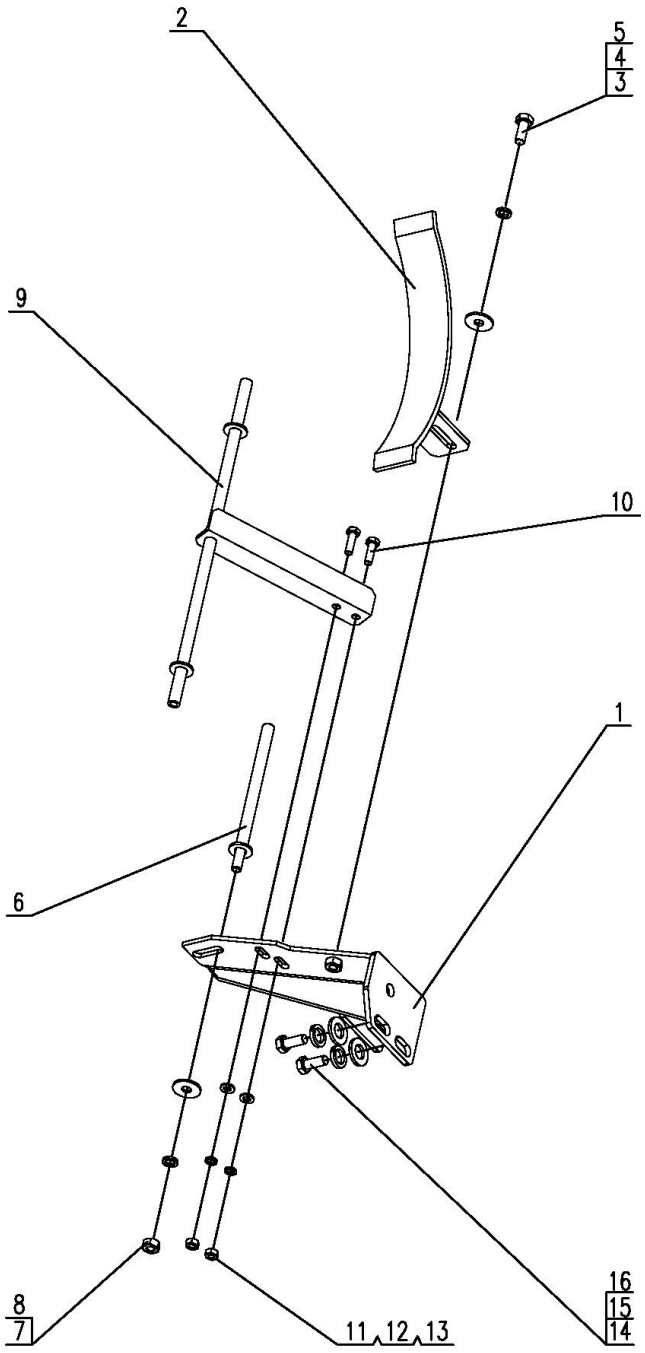

Support Frame Assy

NO.	Description	QTY	Part Code	Note
1	Frame Weld, Cover	1	W2.5K-02PD-25-01-00	
2	Frame Weld, Support	1	W3.5-02A-26-02-00	2SB 1496 Belt
2	Frame Weld, Support	1	W2.5-02G-02-25-02-00	SC 1465 Belt
3	Bolt M8×20	3	GB5783-86	
4	Washer 8	4	GB93-86	
5	Washer 8	1	GB96-85	
6	Shaft Weld	1	W2.5-02G-02-25-03-00	
7	Nut M8	1	GB/T6170-86	
8	Washer 8	1	GB/T96-85	
9	Frame Weld, Support	1	W2.5K-02PD-25-02-00	
10	Bolt M6×18	2	GB5783-86	
11	Washer, Plain 6	2	GB/T97.1-85	
12	Cushion 6	2	GB/T93-87	
13	Nut M6	2	GB/T6170-86	
14	Bolt M10×25	3	GB5783-86	
15	Washer 10	3	GB97.1-85	
16	Cushion 10	3	GB93-87	

Horizontal Grain Auger Assy (Sack Type)

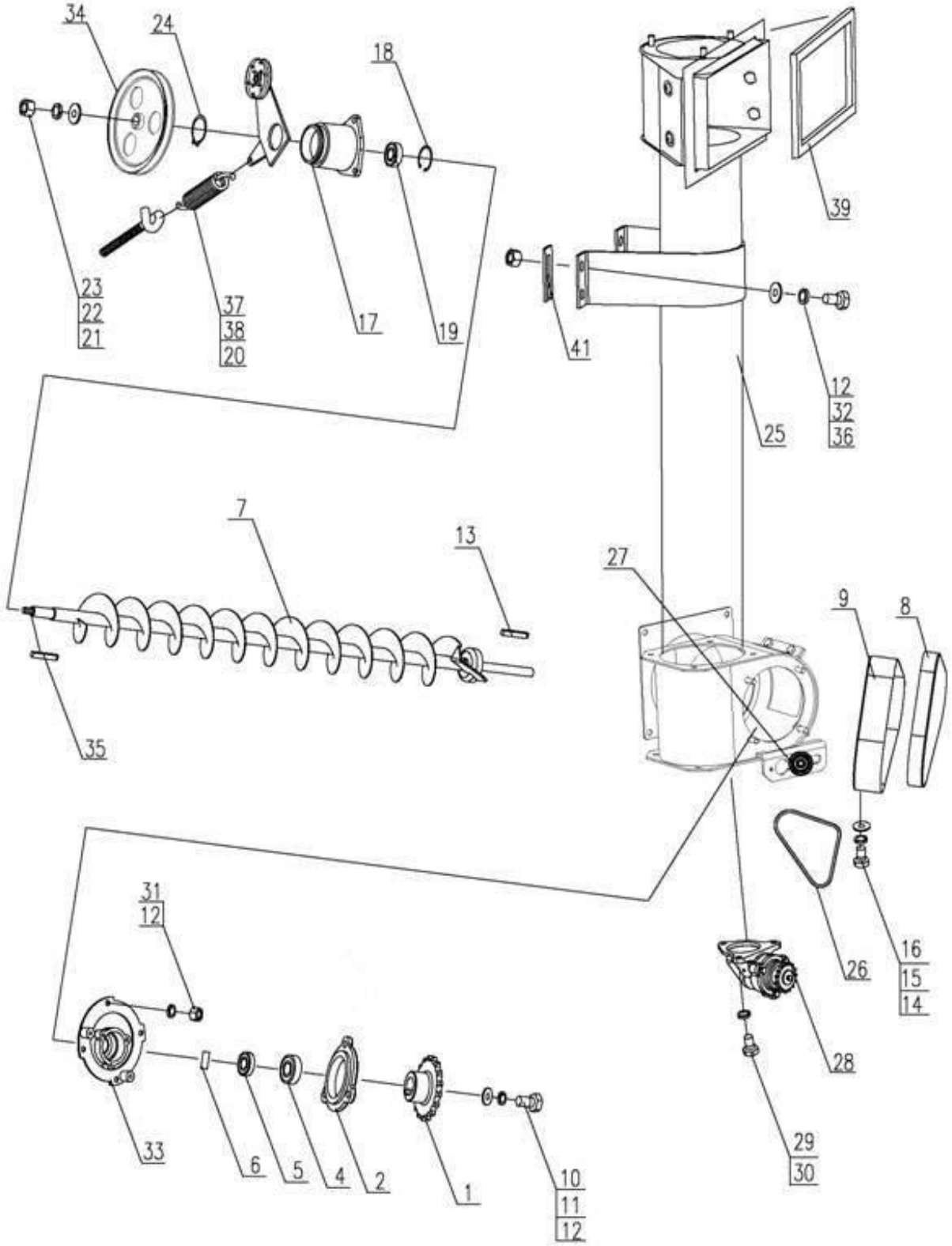

Horizontal Grain Auger Assy (Sack Type)

NO.	Description	QTY	Part Code	Note
1	Chain Wheel (17), Active	1	L1.8A-03-02-01-04A	
2	Cover, Bearing	1	L1.8A-03-04-02-05	
4	Bearing, Grain	1	W2.5K-02PC-10A-02	
5	Oil Seal (F)B30X45X10	1	GB/T13871-92	
6	Shaft Sleeve	1	L1.8A-03-02-01-05	
7	Auger Weld, Horizontal	1	W2.5A-02B-02-10-02-00	
8	Cover Plate	1	W2.5K-02PB-10A-05	
9	Cover Weld	1	W2.5K-02PB-10A-04-00	
10	Retaining Ring	1	03.10.06-01	
11	Bolt M10X20	1	GB/T5783-86	
12	Washer 8	15	GB/T93-87	
13	Key C8X30	1	GB/T1096-79	
14	Bolt M6X16	9	GB/T5783-86	
15	Washer 6	6	GB/T97.1-85	
16	Washer 6	9	GB/T93-87	
17	Bearing Seat, Horizontal, Grain	1	W2.5P-02-02-10-07	
18	Retaining Ring 52	1	GB/T893.1-85	
19	Bearing 6304-2RS	1	W2.5-02-02-10-16	
20	Tension Pulley Assy	1	W2.5P-02-02-10-05-00	
21	Washer 12	1	GB/T96-85	
22	Nut M12X1.25	1	GB/T6176-86	
23	Washer 12	1	GB/T93-86	
24	Retaining Ring 63	1	GB/T894.1-85	
25	Auger Assy, Vertical, Lifting	1	W2.5K-02PB-10C-01-00	Sack Type
26	Chain, Lifting, Grain	1	W2.5K-02PB-10A-15	
27	Tension Chain Wheel Assy	1	L1.8A-03-02-04-00	
28	Bevel Gearbox Assy	1	L1.8A-03-02-03-00	
29	Washer 10	4	GB/T93-87	
30	Bolt M10X25	3	GB/T5783-86	
31	Nut M8	10	GB/T6170-86	
32	Washer 8	4	GB/T96-85	
33	Bearing Seat Weld	1	W2.5K-02SA-10A-03-00	
34	Belt Pulley, Grain Auger	1	W2.5P-02-02-10-06	
35	Key A5X28	1	GB/T1096-79	
36	Bolt M8X25	9	GB/T5783-86	
37	Spring, Threshing	1	W2.5-02-02-10-08A	
38	Tension Bolt	1	W2.5-02-02-10-14	
39	Sponge	1	W2.5-02A-02-10-07	
40	Washer 6,	3	GB/T96-85	

41	Gasket, Adjusting	on demand	W2.5-02GX-02-10-15	

Grain Auger Assy (Grain Tank Type)

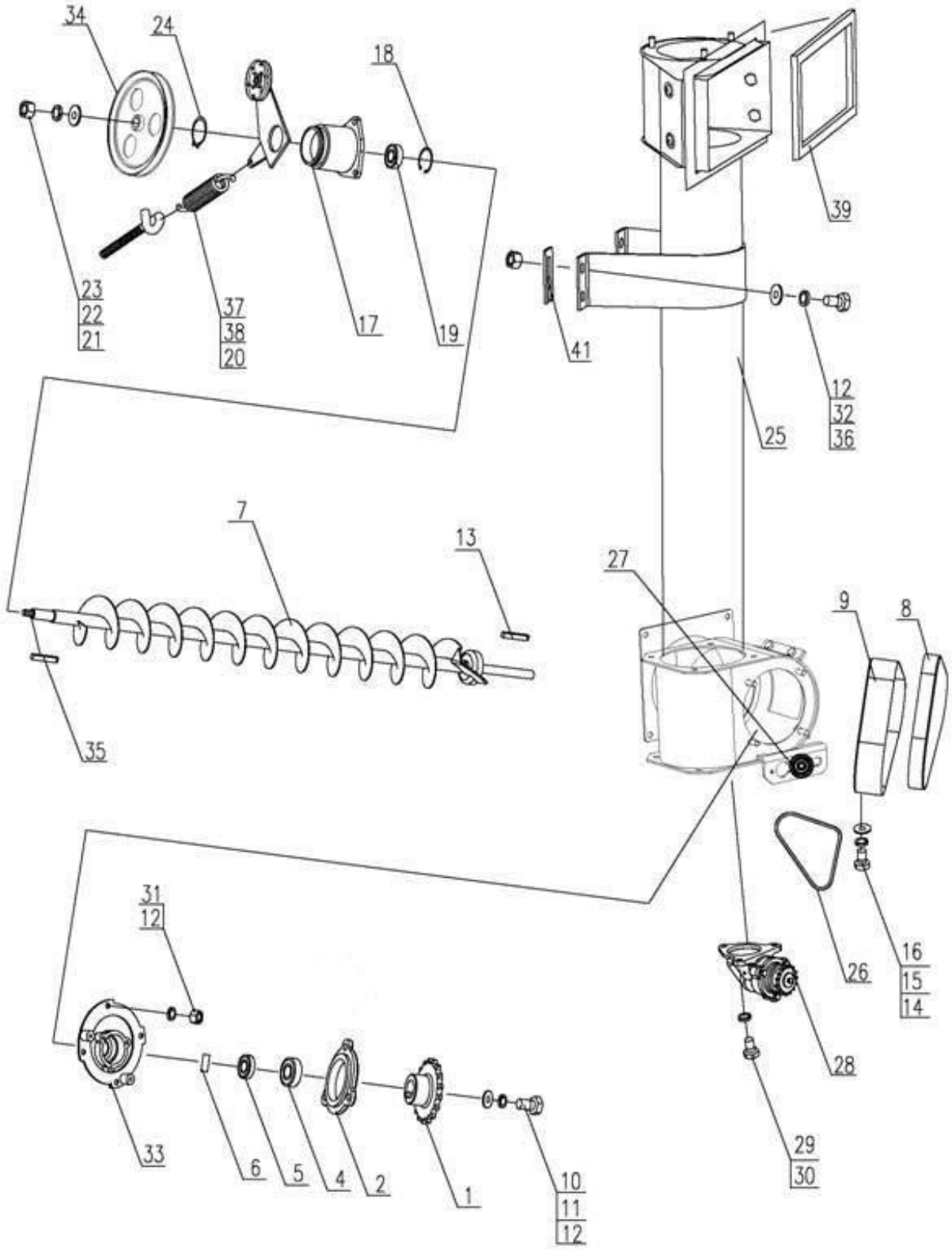

Grain Auger Assy (Grain Tank Type)

NO.	Description	QTY	Part Code	Note
1	Chain Wheel (17), Active	1	L1.8A-03-02-01-04A	
2	Cover, Bearing	1	L1.8A-03-04-02-05	
4	Bearing, Grain	1	W2.5K-02PC-10A-02	
5	Oil Seal (F)B30X45X10	1	GB/T13871-92	
6	Shaft Sleeve	1	L1.8A-03-02-01-05	
7	Auger Weld, Horizontal	1	W2.5A-02B-02-10-02-00	
8	Cover Plate	1	W2.5K-02PB-10A-05	
9	Cover Weld	1	W2.5K-02PB-10A-04-00	
10	Retaining Ring	1	03.10.06-01	
11	Bolt M10X20	1	GB/T5783-86	
12	Washer 8	15	GB/T93-87	
13	Key C8X30	1	GB/T1096-79	
14	Bolt M6X16	9	GB/T5783-86	
15	Washer 6	6	GB/T97.1-85	
16	Washer 6	9	GB/T93-87	
17	Bearing Seat, Horizontal, Grain	1	W2.5P-02-02-10-07	
18	Retaining Ring 52	1	GB/T893.1-85	
19	Bearing 6304-2RS	1	W2.5-02-02-10-16	
20	Tension Pulley Assy	1	W2.5P-02-02-10-05-00	
21	Washer 12	1	GB/T96-85	
22	Nut M12X1.25	1	GB/T6176-86	
23	Washer 12	1	GB/T93-86	
24	Retaining Ring 63	1	GB/T894.1-85	
25	Auger Assy, Vertical, Lifting	1	W3.5H-02-10-01-00	
26	Chain, Lifting, Grain	1	W2.5K-02PB-10A-15	
27	Tension Chain Wheel Assy	1	L1.8A-03-02-04-00	
28	Bevel Gearbox Assy	1	L1.8A-03-02-03-00	
29	Washer 10	4	GB/T93-87	
30	Bolt M10X25	3	GB/T5783-86	
31	Nut M8	10	GB/T6170-86	
32	Washer 8	4	GB/T96-85	
33	Bearing Seat Weld	1	W2.5K-02SA-10A-03-00	
34	Belt Pulley, Grain Auger	1	W2.5P-02-02-10-06	
35	Key A5X28	1	GB/T1096-79	
36	Bolt M8X25	9	GB/T5783-86	
37	Spring, Threshing	1	W2.5-02-02-10-08A	
38	Tension Bolt	1	W2.5-02-02-10-14	
39	Sponge	1	W2.5-02A-02-10-07	
40	Washer 6,	3	GB/T96-85	

41	Gasket, Adjusting	on demand	W2.5-02GX-02-10-15	

Vertical Lifting Auger Assy

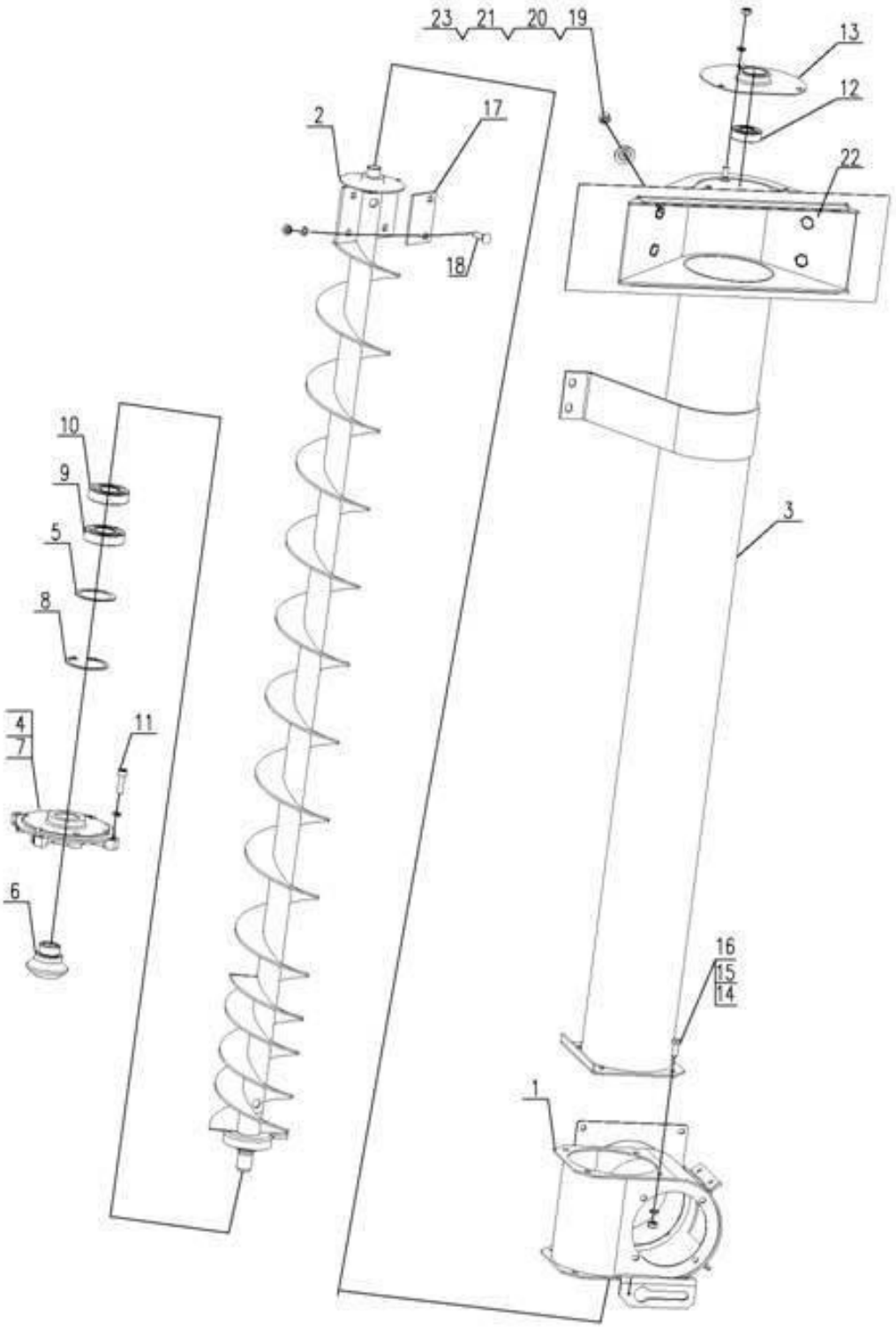

Vertical Lifting Auger Assy

NO.	Description	QTY	Part Code	Note
1	Square Cross, Connecting	1	W2.5K-02PB-10A-01-01-00	
2	Auger Weld, Vertical Lifting	1	W2.5K-02PB-10C-01-03-00	Sack Type/Canopy
2	Auger Weld, Vertical Lifting		W3.5H-02-10-01-03-00	Big Grain Tank Only
3	Housing Weld, Vertical Lifting Auger	1	W2.5K-02PB-10C-01-02-00	Sack Type/Canopy
3	Housing Weld, Vertical Lifting Auger housing Assy		W3.5H-02-10-01-02-00	Big Grain Tank Only
4	Oil Cup M6	2	GB/T1152-89	
5	Gasket	1	W2.5-02G-02-10-01-05	
6	Bevel Gear	1	W2.5-02G-02-10-01-04	
7	Bearing Seat	1	L1.8A-03-04-01-01	
8	Circlip for Bore 62	1	GB/T893.2-86	
9	Bearing 6206	1	GB/T276-82	
10	Oil Seal (F)B38X52X12	1	GB/T13871-92	
11	Bolt M8X30	4	GB/T70-85	
12	Bearing 6204-2RS	1	GB/T276-82	
13	Plate (1#，Vertical)	1	W2.5-02GX-02-10-01-05	
14	Bolt M8X20	4	GB/T5783-86	
15	Washer 8	15	GB/T93-87	
16	Nut M8	15	GB/T6170-86	
17	Plate	2	W2.5-02GX-02-10-01-06	
18	Bolt M8×20	4	GB/T12-1988	8.8
19	Bolt M6X16	4	GB/T819-85	
20	Washer	4	W2.0-02-11-02-04	
21	Nut M6	4	GB/T6170-86	
22	Anti-wear Plate	1	W2.5-02B-02-10-01-04	Sack Type
22	Anti-wear Plate	1	W2.5K-02PX-10-01-04	Grain Tank Type
23	Washer 6	4	GB/T93-87	

Tension Pulley Assy

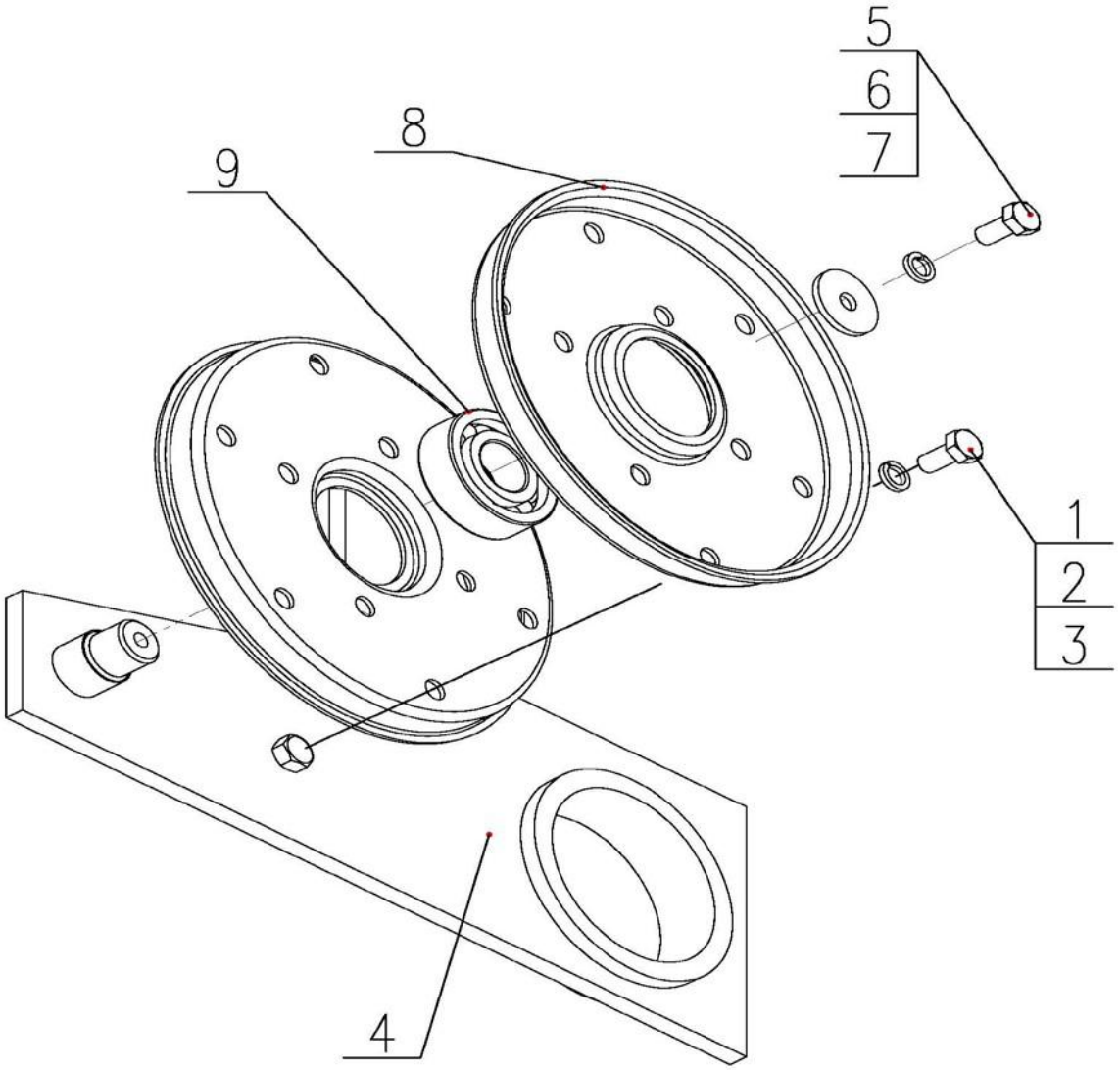

Tension Pulley Assy

NO.	Description	QTY	Part Code	Note
1	Bolt M6×12	10	GB5783-86	
2	Washer 6	10	GB93-87	
3	Nut M6	10	GB6170-86	
4	Tension Arm Weld	1	W2.5P-02-02-10-05-01-00	
5	Bolt M6×12	1	GB5783-86	
6	Washer 6	1	GB93-87	
7	Washer	1	W2.5P-02-02-10-05-03	
8	Tension Pulley	2	W2.5P-02-02-10-05-02-01	
9	Bearing 6302-2RS	1	GB/T276-1994	

Tension Chain Wheel Assy

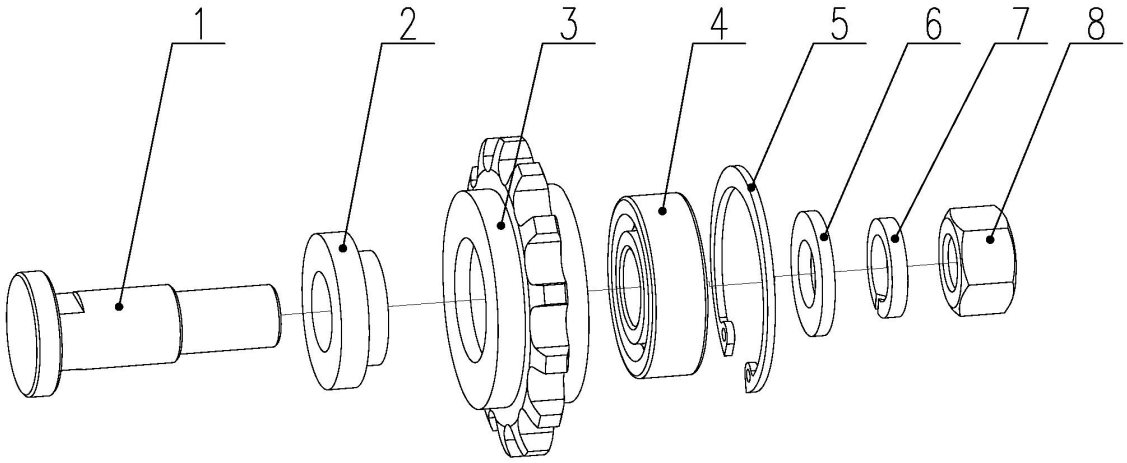

Tension Chain Wheel Assy

NO.	Description	QTY	Part Code	Note
1	Pin Shaft φ15X25	1	L1.8A-03-02-04-01	
2	Tension Shaft Sleeve	1	L1.8A-03-02-04-02	
3	Tension Chain Wheel 08BX14	1	L1.8A-03-02-04-03	
4	Bearing 6202-2RS	1	GB/T 276-94	
5	Circlip for Bore 35	1	GB/T893.1-86	
6	Washer 12	1	GB/T97.1-85	
7	Washer 12	1	GB/T93-87	
8	Nut M12	1	GB/T6170-86	

Gearbox Assy

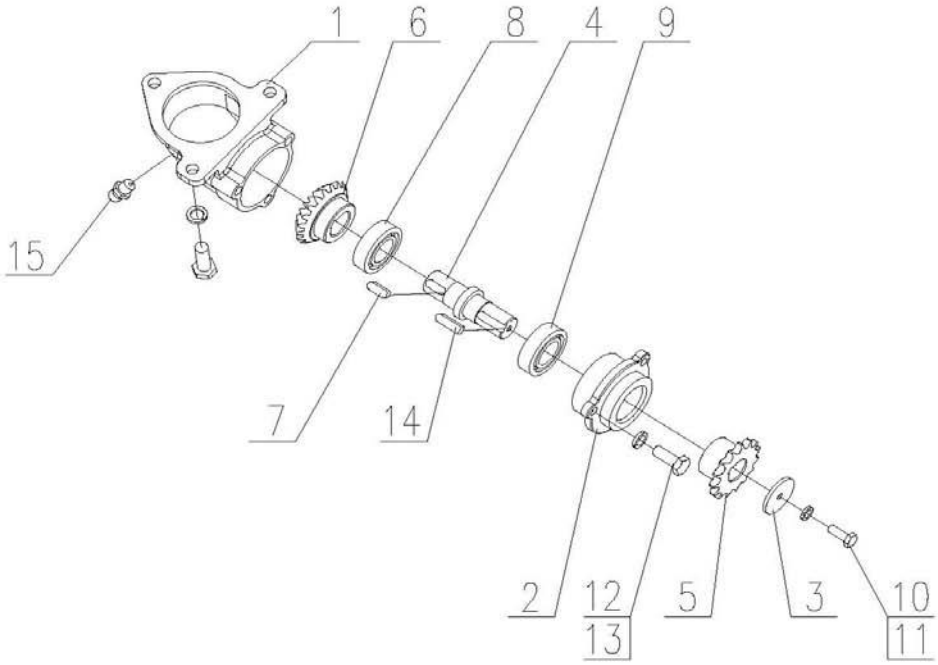

Gearbox Assy

NO.	Description	QTY	Part Code	Note
1	Gearbox Housing	1	L1.8A-03-04-03-01	
2	Bearing Seat	1	L1.8A-03-04-03-02	
3	Retaining Ring	1	L1.8A-01-02-17	
4	Shaft, Chain wheel	1	L1.8A-03-04-03-03	
5	Chain Wheel (15)	1	L1.8A-03-02-03-01	
6	Bevel Gear	1	L1.8A-03-04-03-05	
7	Key C8×30	1	GB/T1096-79	
8	Bearing 205-LS	1	GB/T276-94	
9	Bearing 205	1	GB/T276-94	
10	Bolt M6×20	1	GB/T5783-86	
11	Washer 6	1	GB/T93-87	
12	Bolt M8×25	3	GB/T5783-86	
13	Washer 8	3	GB/T93-87	
14	Key A8×20	1	GB/T1096-79	
15	Oil Cup M6	1	GB/T1152-89	

III. Straw Chopper

Straw Chopper

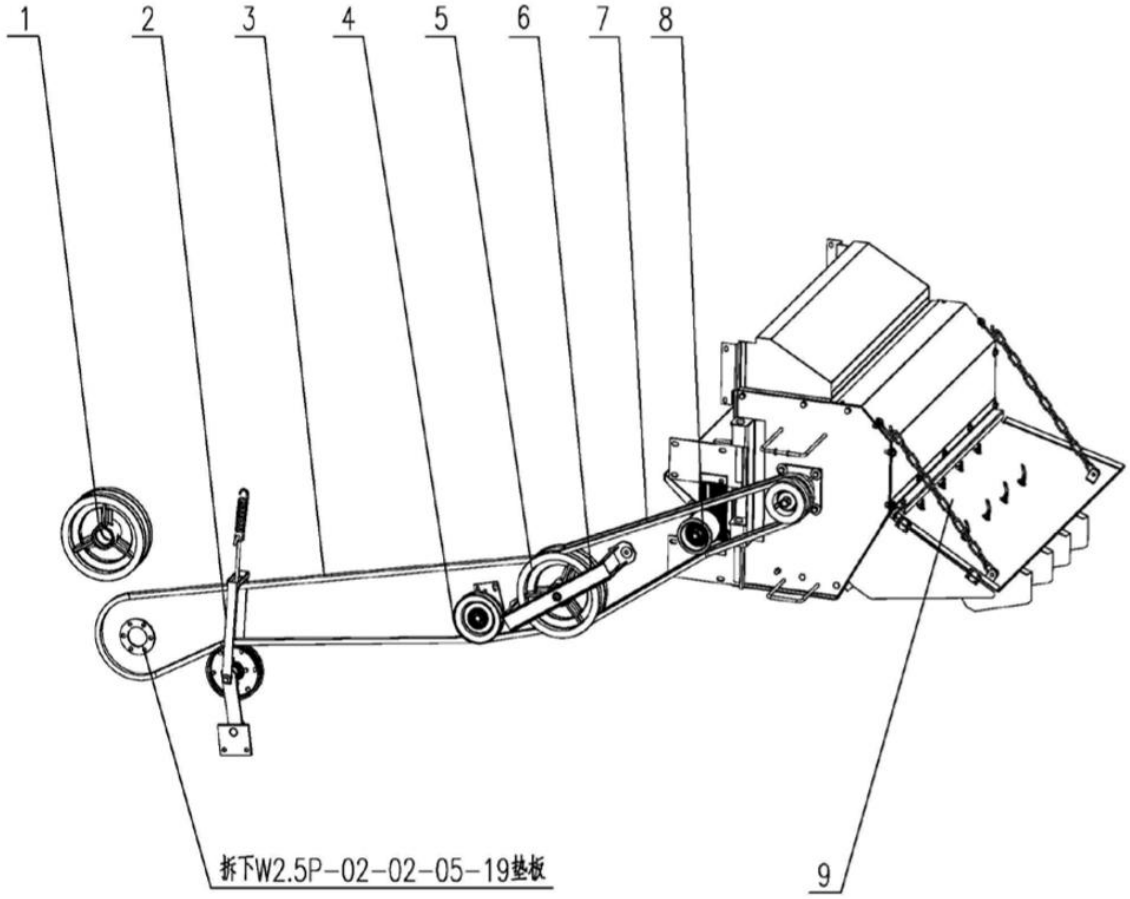

Straw Chopper

NO.	Description	QTY	Part Code	Note
1	Belt Pulley	1	W2.5-02-56B-30	
2	Tension Device	1	W2.5-02-56B-28-00	
3	Transmission Belt, Transition	1	W2.5-02-56-28	C3280
4	Tension Wheel Assy	1	W2.5-02-56B-29-00	
5	Transition wheel Assy	1	W2.5-02-56C-20-00	
6	Protecting Device Assy	1	W2.5-02-56B-25-00	
7	Transmission Belt	2	W2.5-02-56A-21	B2065
8	Tension Frame Assy	1	W2.5-02-56C-31A-00	
9	Straw Chopper Assy	1	W2.5-02-56C-00	

Transition Wheel Assy

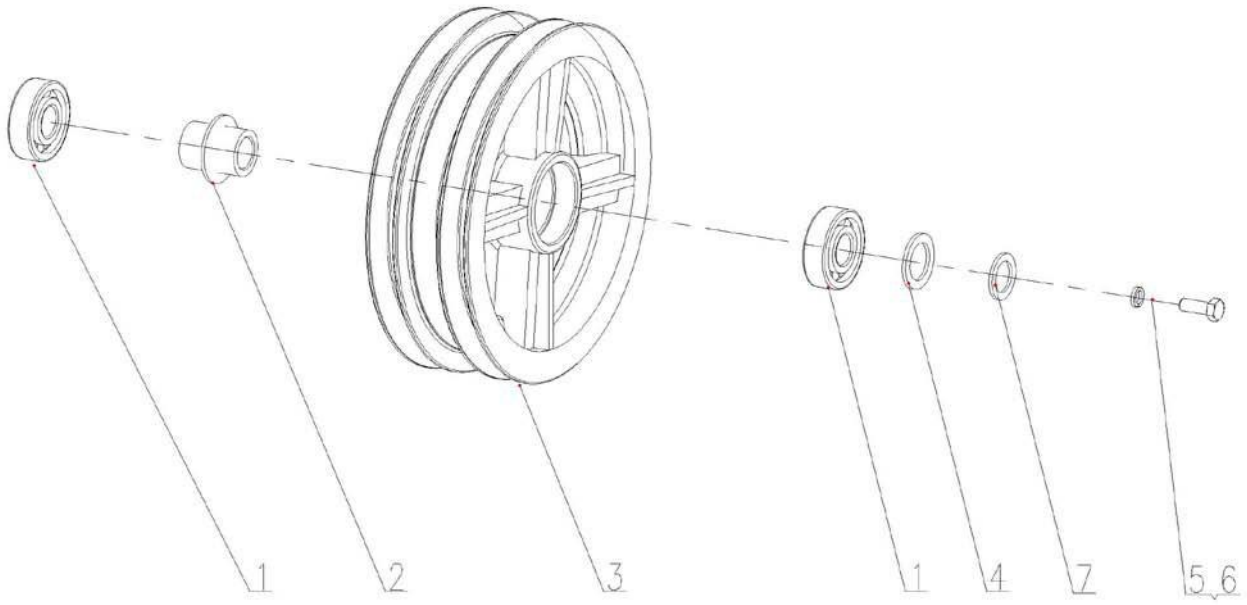

Transition Wheel Assy

NO.	Description	QTY	Part Code	Note
1	Bearing 6304-RS	2	GB/T276-82	
2	Shaft Sleeve Weld	1	W2.5-02-56-20-05-00	
3	Belt Pulley	1	W2.5-02-56C-20-02	
4	Gasket, Adjusting	3	W2.5-02-56-18-02	
5	Washer	1	GB/T93-87	
6	Bolt M8X18	1	GB/T5783-86	
7	Retaining Ring	1	W2.0-02-11-08	

Tension Assy

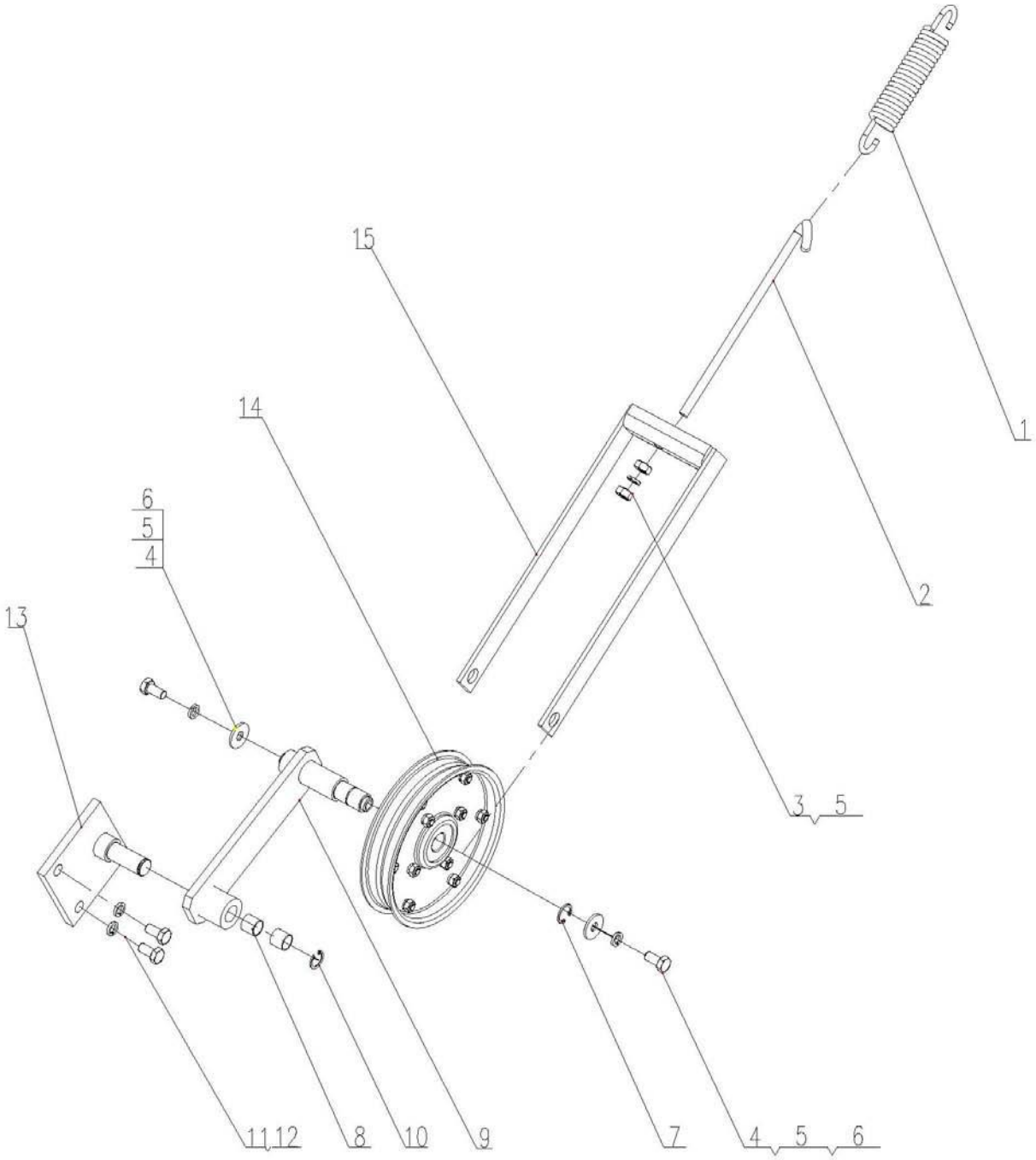

Tension Assy

NO.	Description	QTY	Part Code	Note
1	Spring	1	W2.5-02-56B-28-06	
2	Tension Bolt	1	W2.5-02-56B-28-07	
3	Nut M8	2	GB6170-86	
4	Bolt M8×16	2	GB5783-86	
5	Washer 8	3	GB93-87	
6	Washer 8	2	WD-150.01.29.01-05	
7	Circlip for Shaft Φ17	1	GB/T894.1-86	
8	Bearing (1620)	2	W2.5-02-56B-28-05	
9	Tension Arm Weld	1	W2.5-02-56B-28-02-00	
10	Circlip for Shaft Φ16	1	GB/T894.1-86	
11	Bolt M10×30	2	GB5783-86	
12	Washer 10	2	GB93-87	
13	Tension Seat Weld	1	W2.5-02-56B-28-03-00	
14	Tension Pulley Assy	1	W2.5-02-56B-28-01-00	
15	Tension Frame	1	W2.5-02-56B-28-04-00	

Straw Chopper Assy

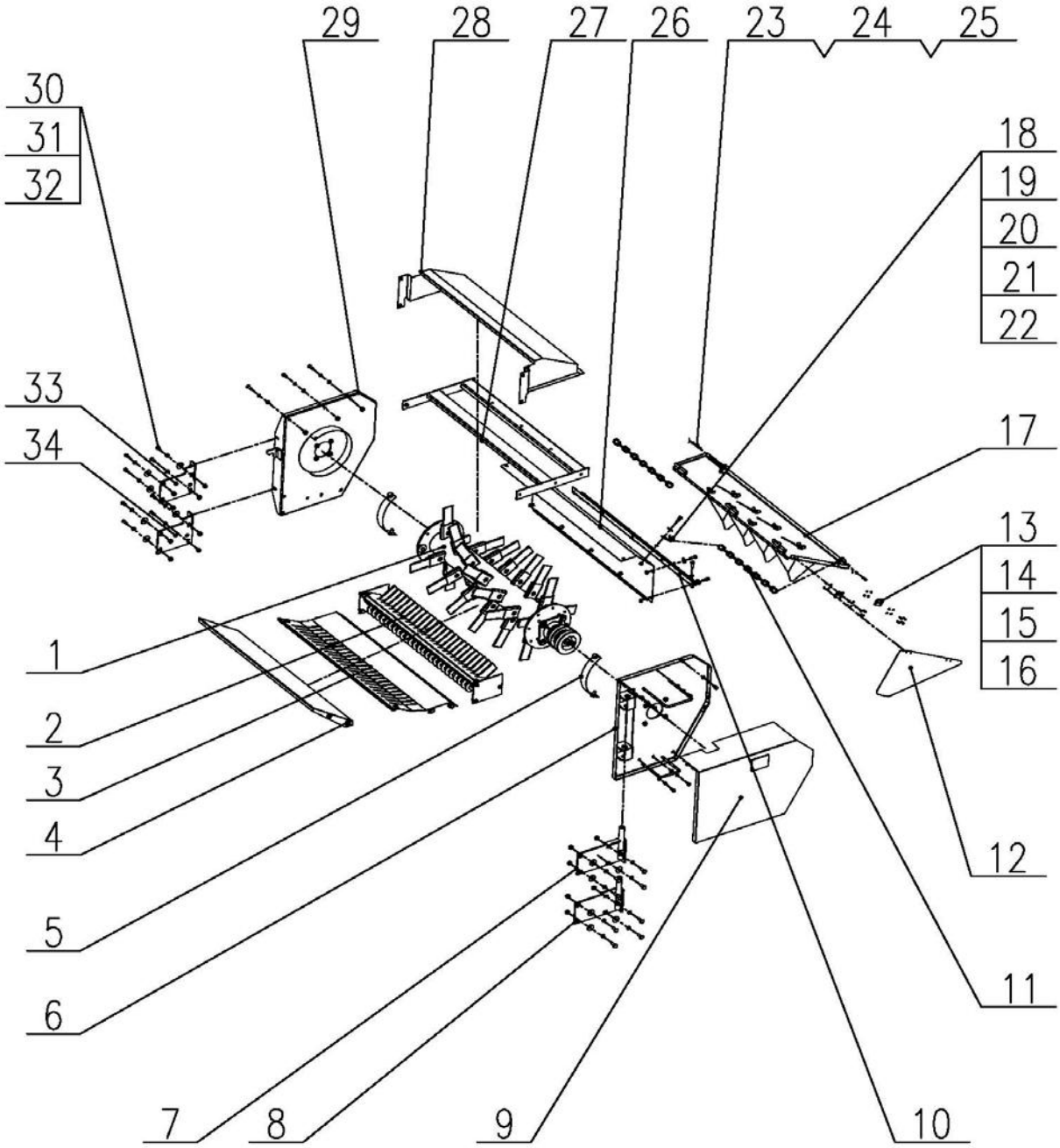

Straw Chopper Assy

NO.	Description	QTY	Part Code	Note
1	Shaft Assy , Straw Chopper	1	W2.5-02-56C-07-00	
2	Fixed Chopper Assy	1	W2.5-02-56C-04-00	
3	Plate Assy, Blade Fixing	1	W2.5-02-56C-05-00	
4	Plate Assy , Straw Separating	1	W2.5-02-56C-16-00	
5	Plate Assy , Anti-tangle	2	W2.5-02-56-13-00	
6	Plate Weld, Left Side	1	W2.5-02-56B-02-00	
7	Installation Seat Weld , Left, Upper	1	W2.5-02-56C-10-00	
8	Installation Seat, Left, Lower	1	W2.5-02-56C-11-00	
9	Cover Assy	1	W2.5-02-56B-15-00	
10	Hook Plate Weld	1	W2.5-02-56C-03-00	
11	Chain Assy	2	W2.5-02-56C-01-00	
12	Left Side Plate	1	W2.5-02-56C-36	
13	Hinge 38X31	2	GB/T3874-1999	
14	Cushion 4	8	GB97.1-85	
15	Nut M4	8	GB6170-86	
16	Bolt M4X12	8	GB5783-86	
17	Plate Assy, Rear	1	W2.5-02-56C-06-00	
18	Hook, Straw Chopper	2	W2.5-02-56C-02	
19	Bolt M8X25	14	GB/T5783-86	
20	Washer 8	20	GB/T96-85	
21	Washer 8	54	GB/T97.1-85	
22	Nut M8	26	GB/T6170-86	
23	Pin Shaft B10X24	2	GB882-86	
24	Washer 10	2	GB97.1-85-85	
25	Pin φ3.2X20	2	GB/T91	
26	Cover Plate Weld	1	W2.5-02-56C-17-00	
27	Frame Weld, Support	1	W2.5-02-56B-01-00	
28	Cover Assy , Upper	1	W2.5-02-56B-08-00	
29	Plate Weld, Right Side	1	W2.5-02-56B-03-00	
30	Bolt M10X30	22	GB/T5783-86	
31	Washer 10	16	GB/T96-85	
32	Washer 10	20	GB/T93-87	
33	Installation Seat Weld , Right, Upper	1	W2.5-02-56C-12-00	
34	Plate, Right	1	W2.5-02-56C-09	

Tension Frame Assy

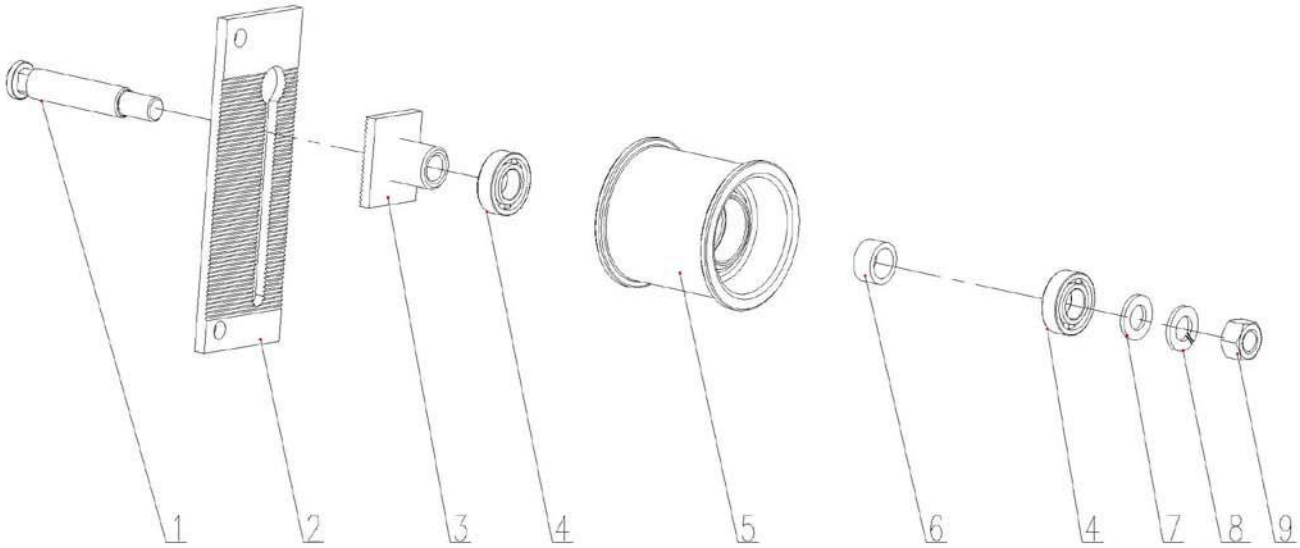

Tension Frame Assy

NO.	Description	QTY	Part Code	Note
1	Pin Shaft	1	W2.5-02-56B-31-03	
2	Plate	1	W2.5-02-56C-31A-01	
3	Fixed Sleeve Weld	1	W2.5-02-56B-31-02-00	
4	Bearing 6204-2RS	2	W2.5-02-56C-31-02-03	W2.5-02-56C-31-02-00 Tension Pulley Assy
5	Tension Pulley	1	W2.5-02-56C-31-02-01	
6	Shaft Sleeve Weld	1	W2.5-02-56C-31-02-02-00	
7	Washer 16	1	GB/T97.1-86	
8	Washer 16	1	GB/T93-85	
9	Nut M16	1	GB/T6170-86	

Fixed Chopper Assy

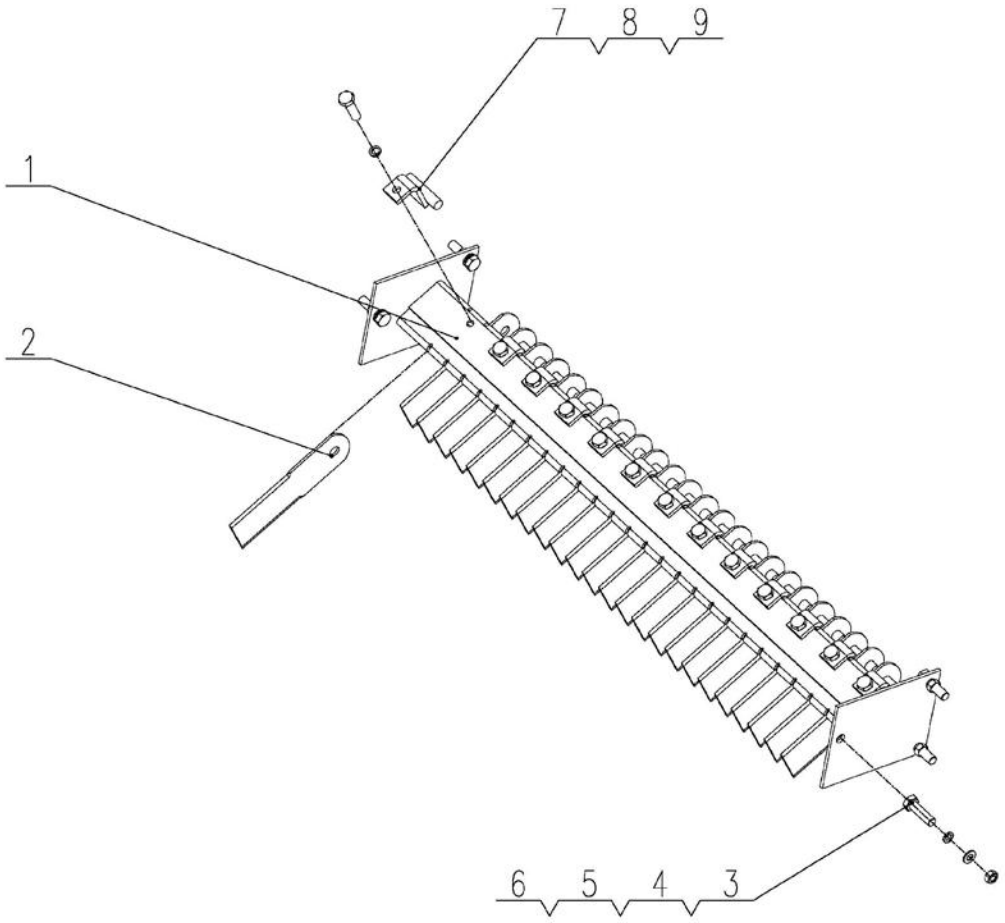

Fixed Chopper Assy

NO.	Description	QTY	Part Code	Note
1	Frame Weld, Chopper Fixed	1	W2.5-02-56C-04-01-00	
2	Chopper	25	W2.5-02-56-04-01	
3	Bolt M10×25	6	GB5783-86	
4	Washer 10	6	GB97.1-85	
5	Washer 10	6	GB93-87	
6	Nut M10	6	GB6170-86	
7	Plate Weld, Fixed Chopper	13	W2.5-02-56A-04-02-00	
8	Bolt M8×20	13	GB5783-86	
9	Washer 8	13	GB93-87	

Straw Chopper Shaft Assy

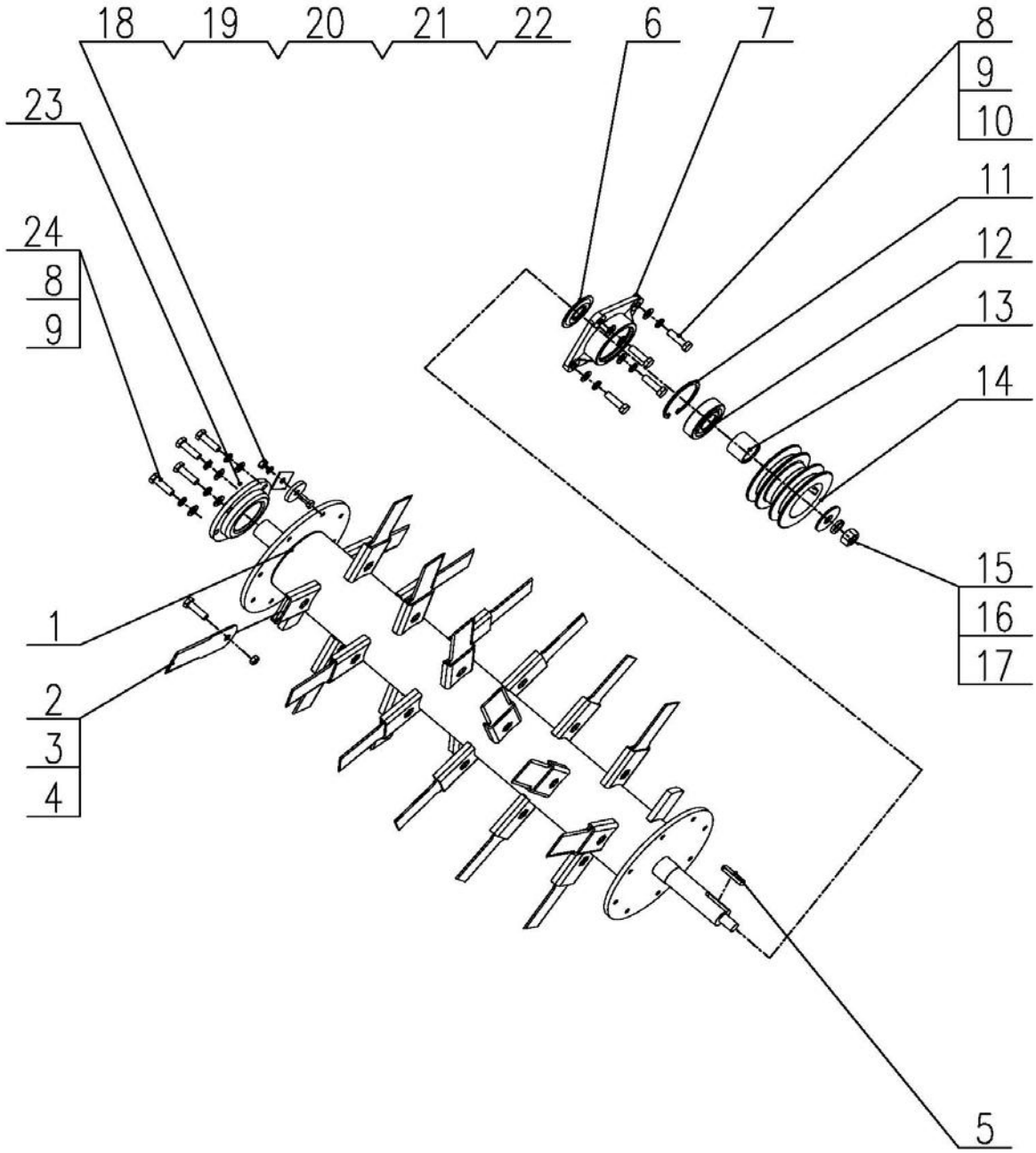

Straw Chopper Shaft Assy

NO.	Description	QTY	Part Code	Note
1	Shaft Weld, Straw Chopper	1	W2.5-02-56C-07-01-00	
2	Chopper	24	W2.5-02-56-04-01	
3	Bolt M12×25	24	GB5783-86	
4	Nut M12	24	GB/T889-2000	
5	Key A8×45	1	GB1096-79	
6	Shaft Ring	1	W2.5-02-56B-07A-05	
7	Bearing Seat B	1	W2.5-02-56B-07A-19	
8	Bolt M10×35	4	GB5783-86	
9	Cushion10	8	GB93-87	
10	Cushion 10	8	GB97.1-85	
11	Washer72, Hole	1	GB893.1-86	
12	Bearing 6306-2RS,Left	1	W2.5-02-56-07-24	
13	Sleeve	1	W2.5-02-56B-07A-03	
14	Belt Pulley	1	W2.5-02-56C-07A-18	
15	Nut M16	1	GB6170-86	
16	Cushion16	1	GB93-87	
17	Washer	1	WD.4F.27A-02	
18	Bolt M8X20	on demand	GB/T5783-86	
19	Balance Block	on demand	W2.5-02G-01-02-19	
20	Balance Block	on demand	QT007-2009	
21	Washer 8	on demand	GB/T93-87	
22	Nut M8	on demand	GB/T6170-86	
23	Bearing UELFC206	1	W2.0M-02-72-08	
24	Bolt M10×45	4	GB5783-86	

Blade Fixing Plate Assy

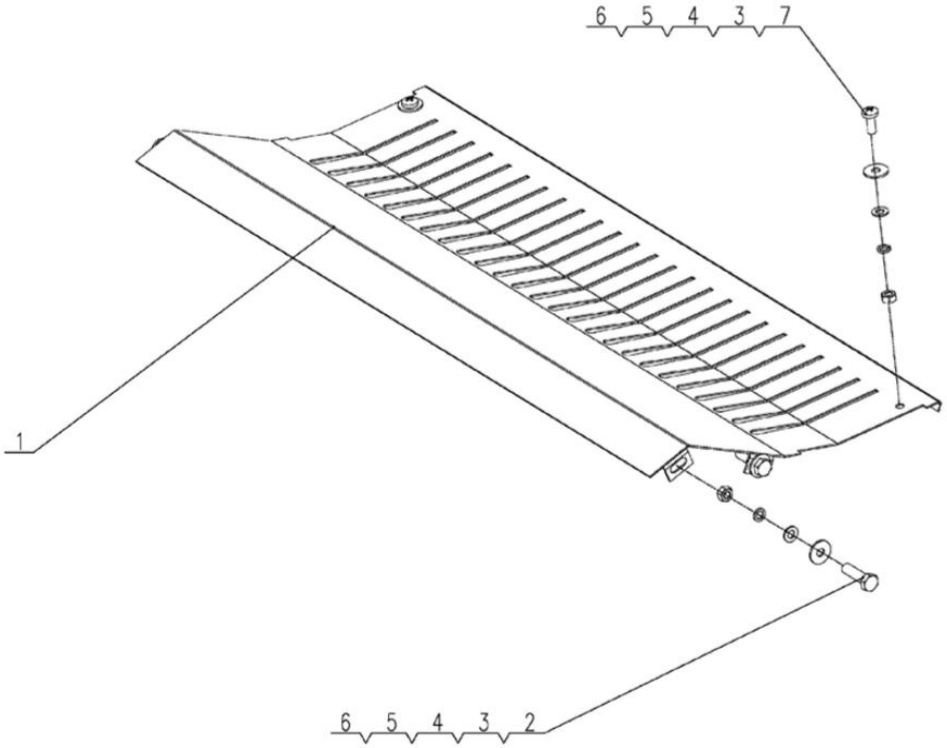

Blade Fixing Plate Assy

NO.	Description	QTY	Part Code	Note
1	Fixing Plate Weld	1	W2.5-02-56C-05-01-00	
2	Bolt M8X25	4	GB/T5783-86	
3	Washer, Big 8	6	GB/T96-85	
4	Washer 8	6	GB/T97.1-85	
5	Washer 8	6	GB/T93-87	
6	Nut M8	4	GB/T6170-86	
7	Bolt 8X20	2	GB818-2000	

Rear Plate Assy

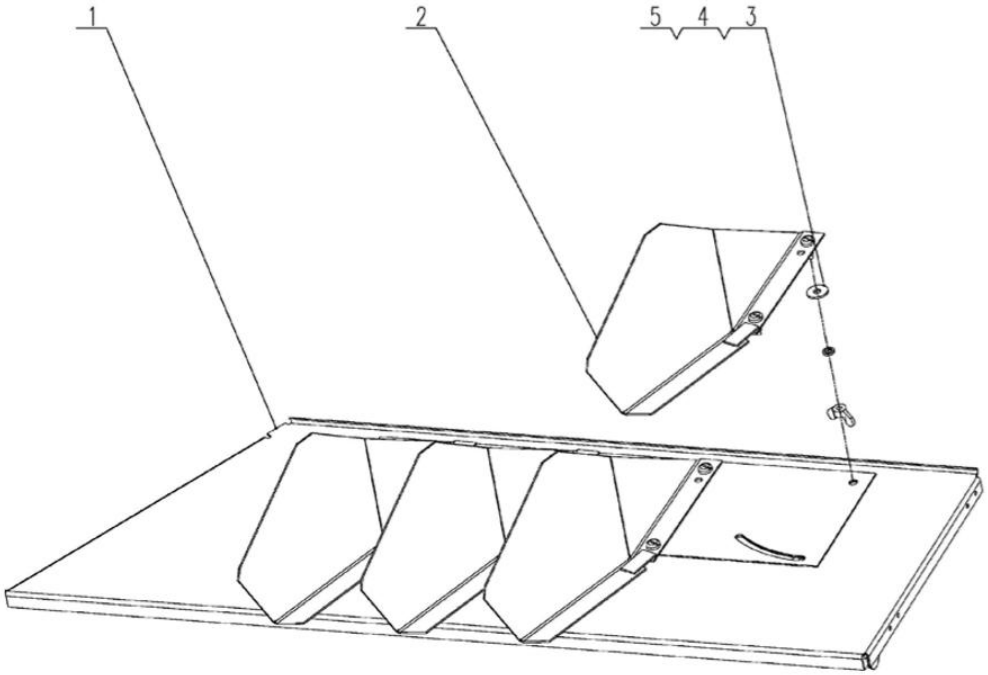

Rear Plate Assy

NO.	Description	QTY	Part Code	Note
1	Plate Weld, Rear Side	1	W2.5-02-56C-06-01-00	
2	Guide Plate Weld A	4	W2.5-02-56A-06-02-00	
3	Gasket 8	8	GB/T96-85	
4	Gasket 8	8	GB/T93-87	
5	Nut M8	6	GB/T62-88	

Anti-tangle Assy

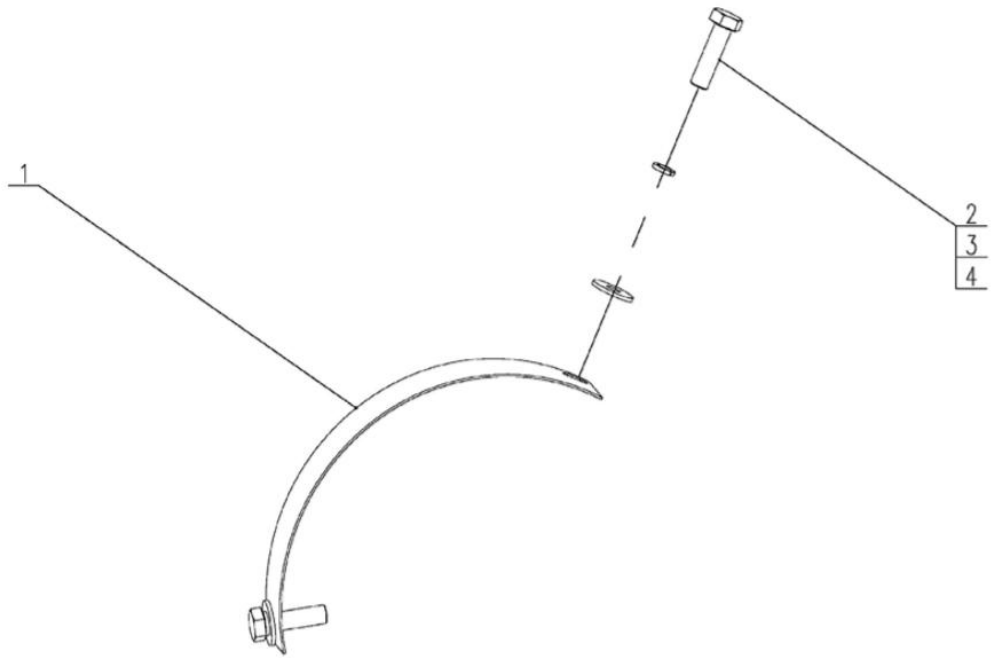

Anti-tangle Assy

NO.	Description	QTY	Part Code	Note
1	Anti-tangle Plate	1	W2.5-02-56-13-01	
2	Bolt M6×12	2	GB5783-86	
3	Washer 6	2	GB96-85	
4	Washer 6	2	GB93-87	

Straw Separating Plate Assy

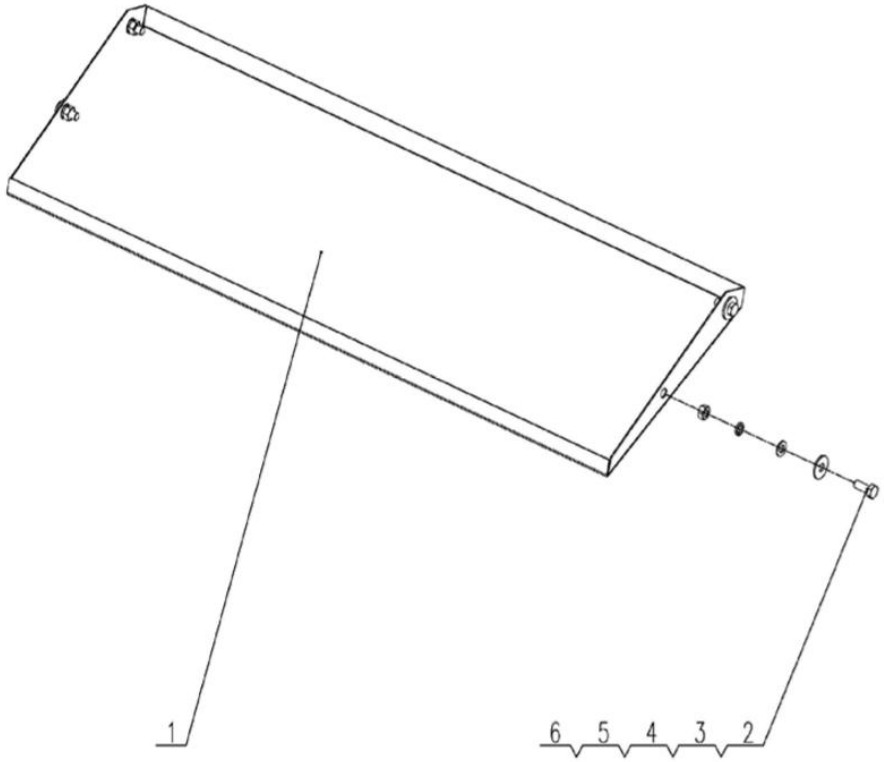

Straw Separating Plate Assy

NO.	Description	QTY	Part Code	Note
1	Straw Separating Weld	1	W2.5-02-56C-16-01-00	
2	Bolt M8X25	4	GB/T5783-86	
3	Washer 8	4	GB/T97.1-85	
4	Washer 8	4	GB/T96-85	
5	Washer 8	4	GB/T93-87	
6	Nut M8	4	GB/T6170-86	

IV Chassis

Chassis Assy (Ruilong Plus, Cabin Type)

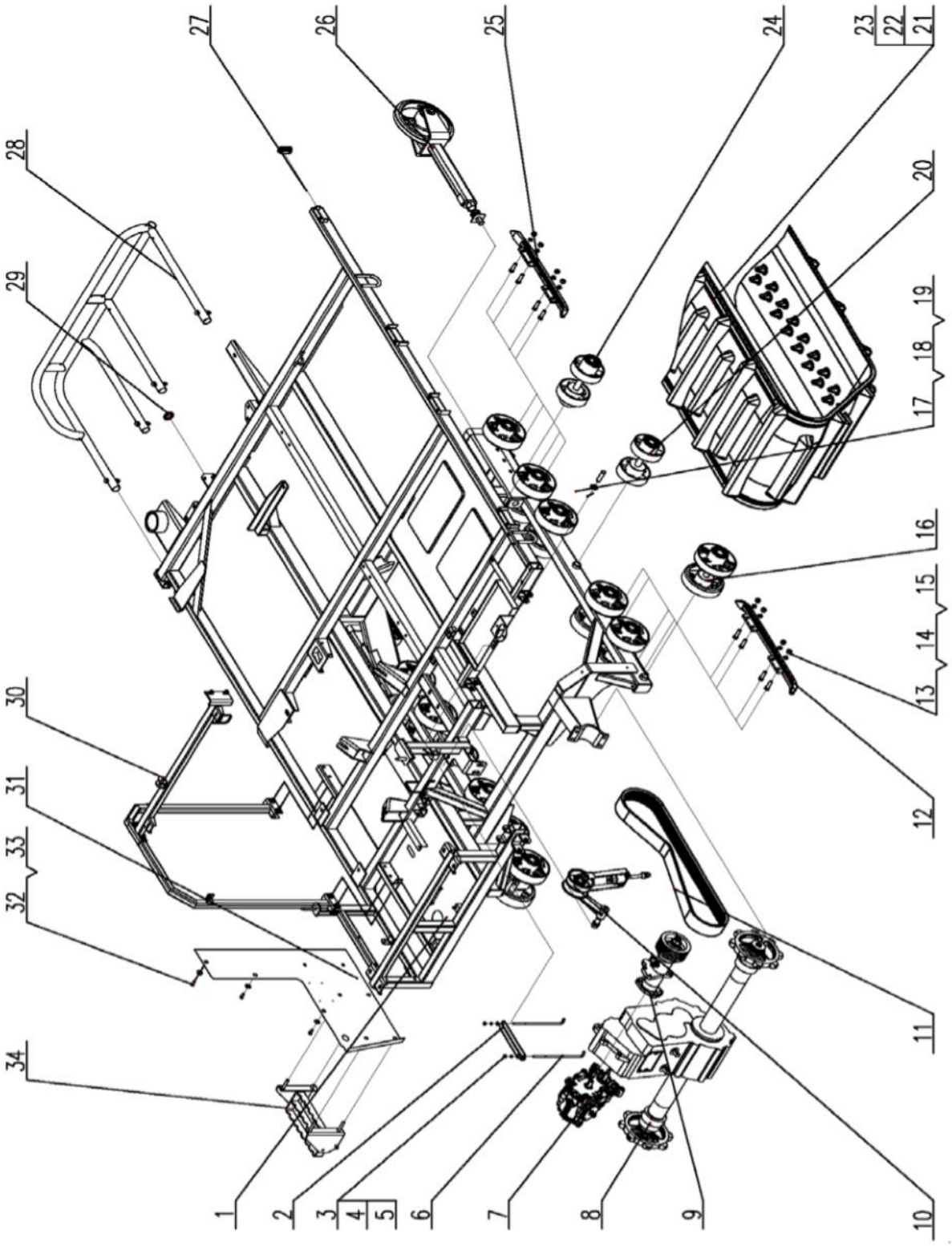

Chassis Assy (Ruilong Plus, Cabin Type)

NO.	Description	QTY	Part Code	Note
1	Chassis Weld	1	W3.5H-03A-01-00	
2	Press Plate	1	W2.5DA-03H-35Q	
3	Washer 8	2	GB/T97.1	
4	Nut M8	2	GB/T6170	
5	Washer 8	7	GB/T93	
6	Hook	2	W2.5DA-03H-36Q	
7	HST Assy	1	W2.0-03(R)-03-00	45CC
8	Gearbox Assy	1	W3.5H-03A-02-00	
9	HST Connector	1	W2.5E-03B-10-00	
10	Tension Pulley Assy , Walking	1	W2.5DA-03H-17C-00	
11	Joint Belt, Walking 9J-5-1605	1	W2.5DA-03H-31	
12	Guide Rail Weld, Front	2	W2.5D-03-32-00	
13	Bolt M12×35	16	GB/T5783	10.9
14	Nut M12	16	GB/T6170	10
15	Washer 12	16	GB/T93	
16	Support Roller Assy	12	W3.5H-03A-06-00	
17	Pin Shaft B16×55	2	GB/T882	
18	Washer 16	2	GB/T97.1	
19	Pin 4×36	2	GB/T91	
20	Balanced Roller Assy	2	W3.5H-03A-07-00	
21	500×90×56 45mm Track	2	W5.0-03X-40	Optional
22	550×90P×56 mm Track	2	WD.4ME-09	Optional
23	550×90×56 60mm Track	2	W3.5H-03A-30	Standard
24	Roller Assy , Support	2	W3.5H-03A-28-00	
25	Guide Rail Weld, Rear	2	WD.4FE.33	
26	Tension Pulley Assy	2	WD.4ME.27	
27	Stopper, Rubber	1	W2.5DA-03H-34D	
28	Safety Railing Assy	1	W2.5DA-03HX-18-00	
29	Dust Proof Washer	1	W2.5DA-07-06-03-05	
30	Supporting Assy, Middle	1	W2.5M-03F-50-00	
31	Right Plate, Cabin	1	W3.5H-03A-51	
32	Bolt M8X20	5	GB/T5783	
33	Washer 8	5	GB/T96	
34	Pedal Assy	1	W3.5-03A-16-00	

Chassis Assy (Ruilong Plus, Canopy，Big Grain Tank)

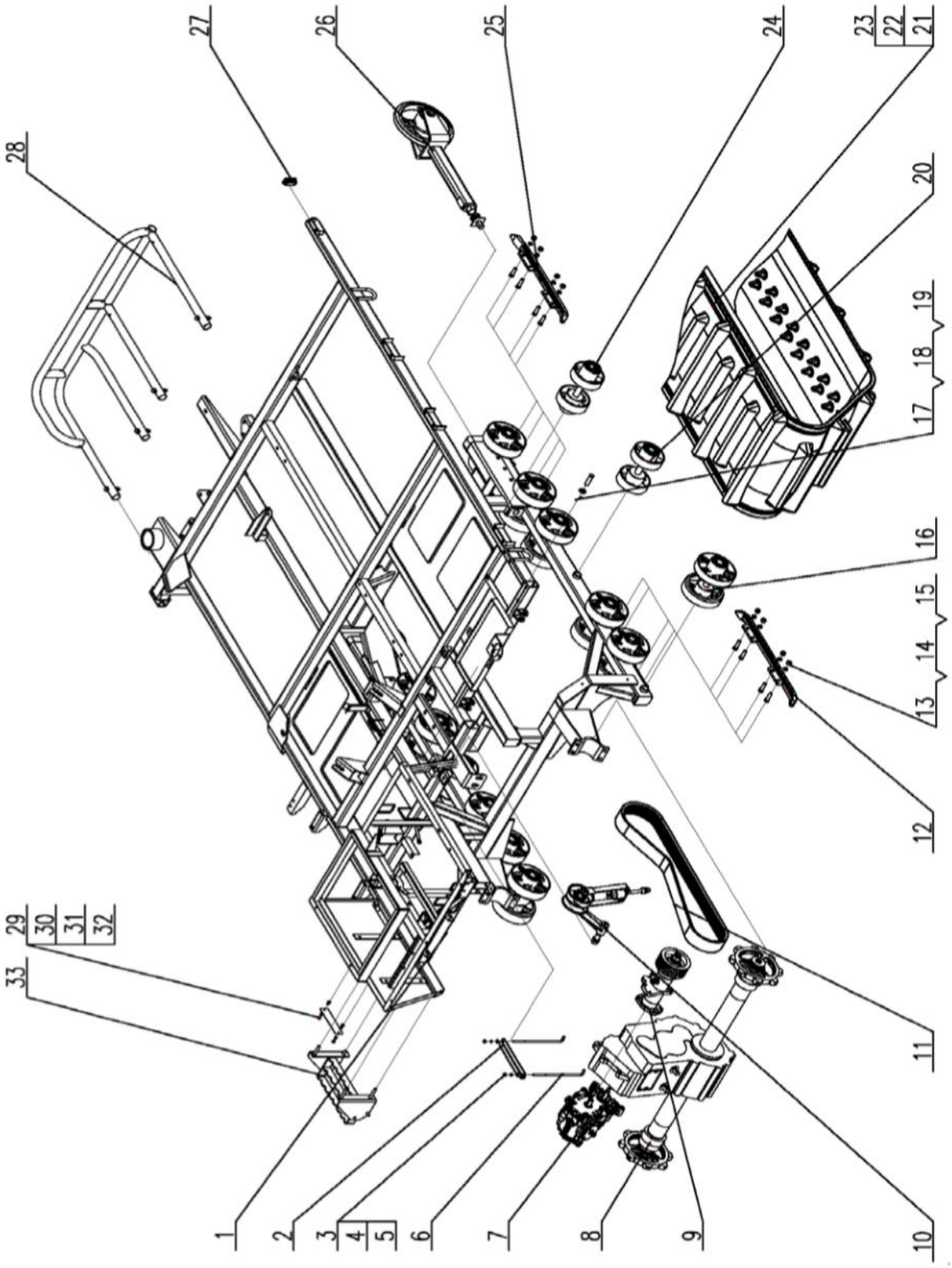

Chassis Assy (Ruilong Plus, Canopy, Big Grain Tank)				
NO.	**Description**	**QTY**	**Part Code**	**Note**
1	Chassis Weld	1	W3.5H-03K-01-00	
2	Press Plate	1	W2.5DA-03H-35Q	
3	Washer 8	2	GB/T97.1-86	
4	Nut M8	2	GB/T6170-86	
5	Washer 8	2	GB/T93-87	
6	Hook	2	W2.5DA-03H-36Q	
7	HST Assy	1	W2.0-03(R)-03-00	45CC
8	Gearbox Assy	1	W3.5H-03A-02-00	
9	HST Connector	1	W2.5DA-03H-10-00	
10	Tension Pulley Assy , Walking	1	W2.5DA-03H-17C-00	
11	Joint Belt, Walking 9J-5-1605	1	W2.5DA-03H-31	
12	Guide Rail Weld, Front	2	W2.5D-03-32-00	
13	Bolt M12×35	16	GB/T5783-86	10.9
14	Nut M12	16	GB/T6170-86	10
15	Washer 12	16	GB/T93-87	
16	Support Roller Assy	12	W3.5H-03A-06-00	
17	Pin Shaft B16×55	2	GB/T882-86	
18	Washer 16	2	GB/T97.1-85	
19	Pin 4×36	2	GB/T91-86	
20	Balanced Roller Assy	2	W3.5H-03A-07-00	
21	500×90×56 45mm Track	2	W5.0-03X-40	Optional
22	550×90P×56 Track	2	WD.4ME-09	Optional
23	550×90×56 60mm Track	2	W3.5H-03A-30	Standard
24	Roller Assy , Support	2	W3.5H-03A-28-00	
25	Guide Rail Weld, Rear	2	WD.4FE.33	
26	Tension Pulley Assy	2	WD.4ME.27	
27	Stopper, Rubber	1	W2.5DA-03H-34D	
28	Safety Railing Assy	1	W2.5DA-03HX-18-00	
29	Plate	1	W2.5DA-03H-20D	
30	Bolt M6X16	2	GB/T5783-86	
31	Washer 6	2	GB/T97.1-85	
32	Washer 6	2	GB/T93-87	
33	Pedal Assy	1	W3.5B-03-16-00	

Chassis Assy (Ruilong Plus, Sack Type)

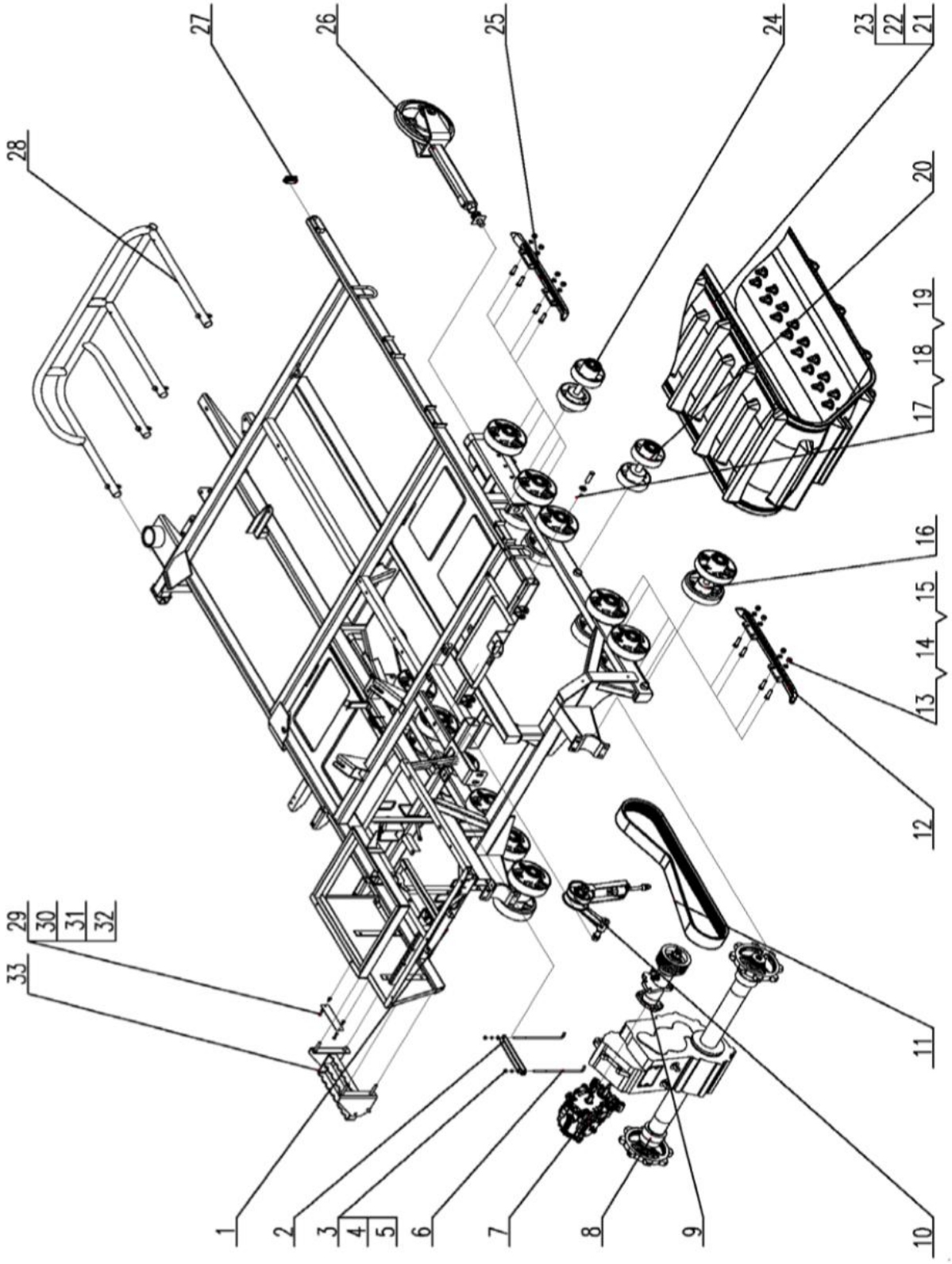

Chassis Assy (Ruilong Plus, Sack Type)

NO.	Description	QTY	Part Code	Note
1	Chassis Weld	1	W3.5H-03R-01-00	
2	Press Plate	1	W2.5DA-03H-35Q	
3	Washer 8	2	GB/T97.1	
4	Nut M8	2	GB/T6170	
5	Washer 8	2	GB/T93-87	
6	Hook	2	W2.5DA-03H-36Q	
7	HST Assy	1	W2.0-03(R)-03-00	45CC
8	Gearbox Assy	1	W3.5H-03A-02-00	
9	HST Connector	1	W2.5DA-03H-10-00	
10	Tension Pulley Assy , Walking	1	W2.5DA-03H-17C-00	
11	Joint Belt, Walking 9J-5-1605	1	W2.5DA-03H-31	
12	Guide Rail Weld, Front	2	W2.5D-03-32-00	
13	Bolt M12×35	16	GB/T5783	10.9
14	Nut M12	17	GB/T6170	10
15	Washer 12	17	GB/T93	
16	Support Roller Assy	12	W3.5H-03A-06-00	
17	Pin Shaft B16×55	2	GB/T882	
18	Washer 16	2	GB/T97.1	
19	Pin 4×36	2	GB/T91	
20	Balanced Roller Assy	2	W3.5H-03A-07-00	
21	500×90×56 45mm Track	2	W5.0-03X-40	Optional
22	550×90P×56 Track	2	WD.4ME-09	Optional
23	550×90×56 60mm Track	2	W3.5H-03A-30	Standard
24	Roller Assy , Support	2	W3.5H-03A-28-00	
25	Guide Rail Weld, Rear	2	WD.4FE.33	
26	Tension Pulley Assy	2	WD.4ME.27	
27	Stopper, Rubber	1	W2.5DA-03H-34D	
28	Plate	1	W2.5DA-03H-20D	
29	Bolt M6X16	2	GB/T5783-86	
30	Washer 6	2	GB/T97.1-85	
31	Washer 6	2	GB/T93-87	
32	Pedal Assy	1	W3.5B-03-16-00	
33	Cover Plate	1	W3.5H-03R-18	
34	Bolt M8×16	9	GB/T818-85	
35	Washer 8	9	GB/T96-85	
36	Plate Weld	1	W3.5H-03R-16-00	
37	Pin Shaft B10×55	2	GB/T882	
38	Washer 10	2	GB/T97.1	
39	Pin 3.2×30	2	GB/T91	
40	Balance Block	3	W2.5-03-21	

Chassis Assy (Ruilong Plus, Sack Type)

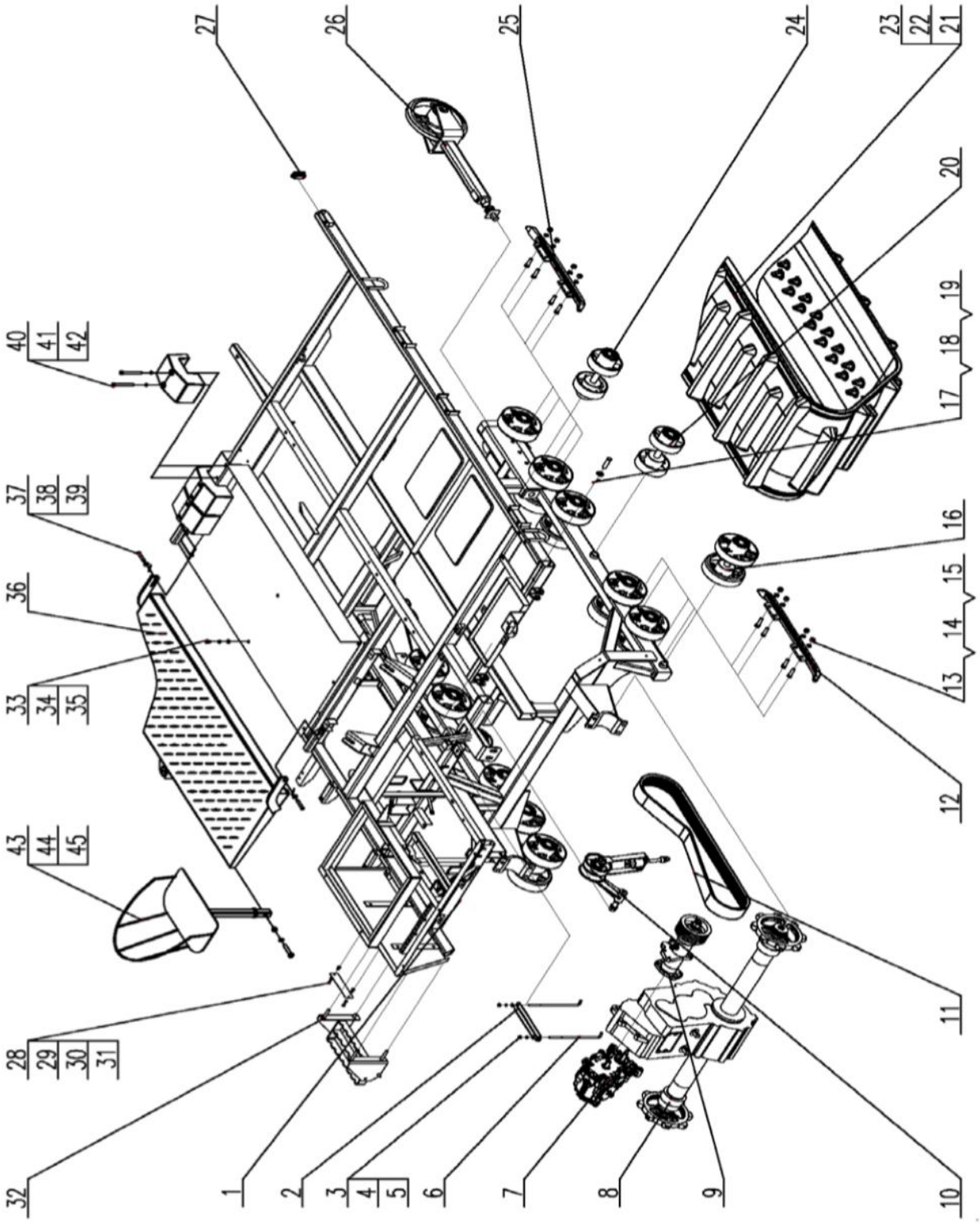

Chassis Assy (Ruilong Plus, Sack Type)

NO.	Description	QTY	Part Code	Note
41	Bolt M10×90	6	GB/T5782	
42	Washer 10	6	GB/T93	
43	Seat Weld	1	L1.8A-12-00	
44	Bolt M12×60	1	GB/T5782-86	
45	Washer 12	1	GB/T97.1	

Gearbox Assy

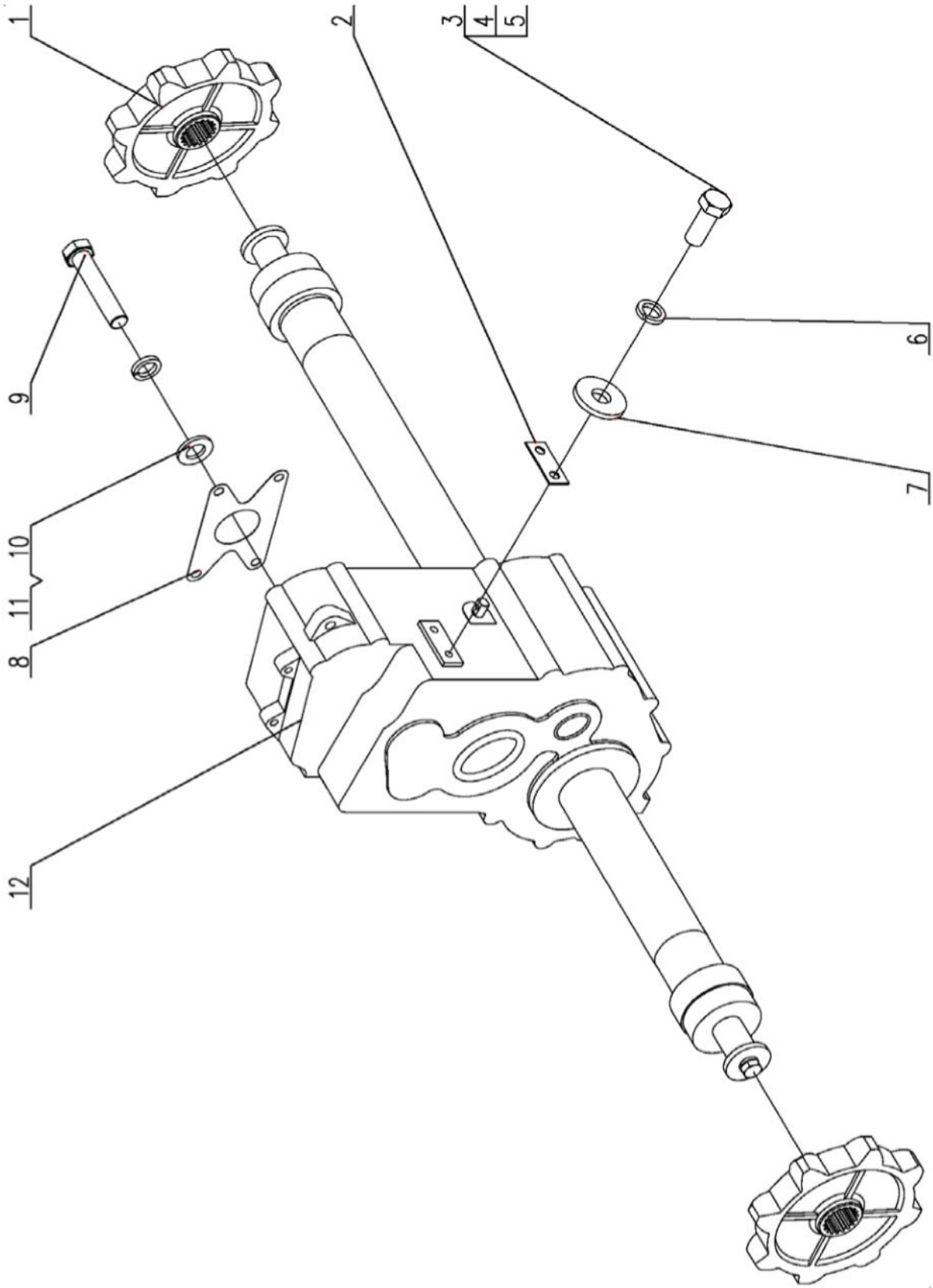

Gearbox Assy

NO.	Description	QTY	Part Code	Note
1	Driving Chain Wheel	2	WD.4MC.2-01C	
2	Adjusting Gasket, Gearbox	on demand	W2.0-03-02-04	
3	Bolt M12×30	2	GB/T5783	With 1 Spacer
4	Bolt M12×35	2	GB/T5783	With 2-3 Spacer
5	Bolt M12×40	2	GB/T5783	More Than 3 Spacer
6	Washer 12	2	GB/T93	
7	Washer	2	W2.5C-03D-02-06	
8	HST Gasket	1	W2.0-03(R)-02-12	
9	Bolt M12×1.25×60	4	GB/T5785	8.8
10	Washer 12	4	GB/T97.1	Japanese HST
11	Washer 12	1	GB/T97.1	Korean HST
12	Gearbox Assy	1	W3.5H-03A-02-05-00	85 Gearbox

HST Assy

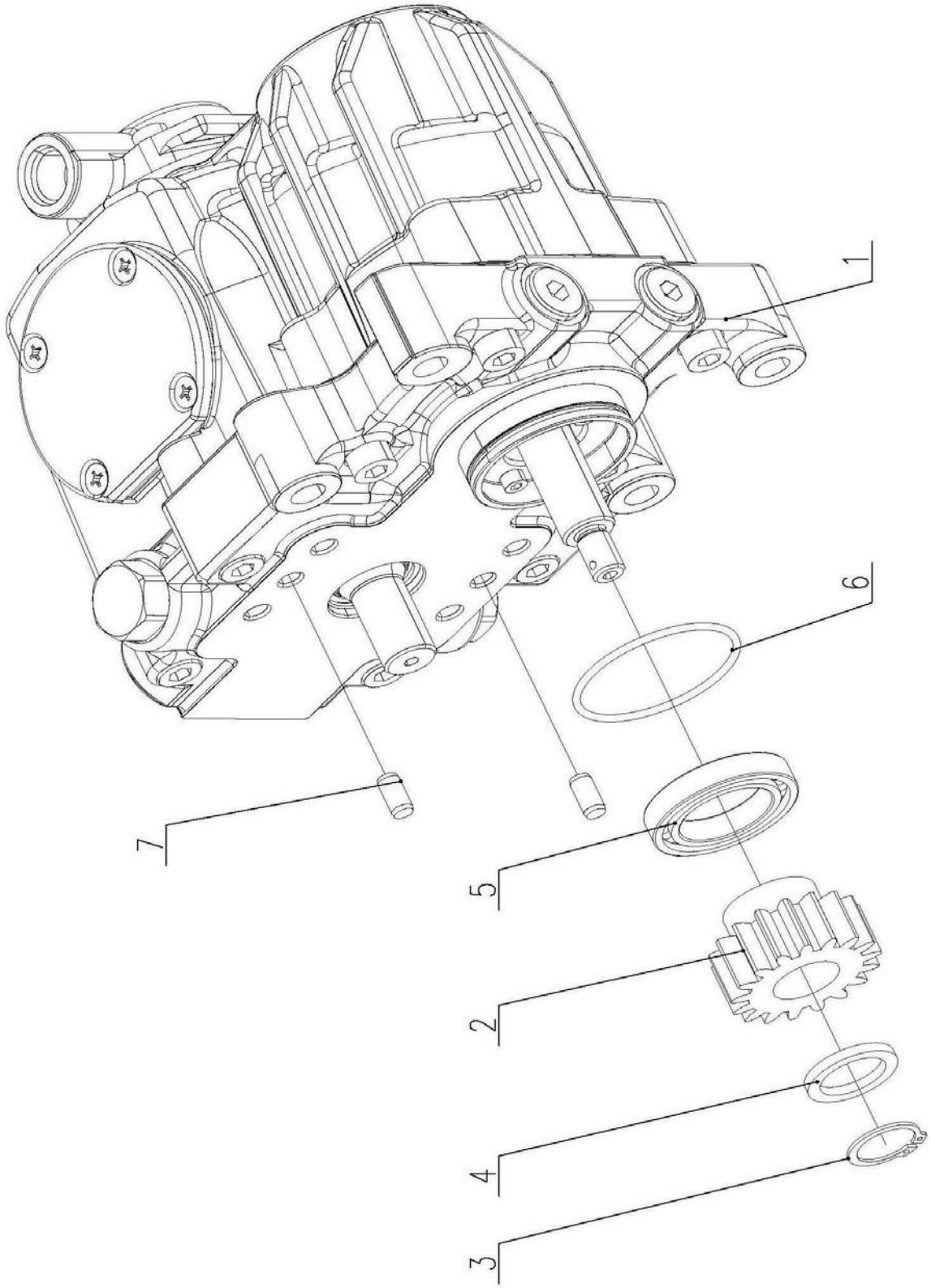

HST Assy

NO.	Description	QTY	Part Code	Note
1	HST Pump	1	W2.0-03(R)-03B-01-00	45CC
2	Gear	1	ZKB80-307-001	
3	Circlip for Shaft 24	1	GB/T894	
4	Washer	1	W2.0-03(R)-03-03A	
5	HST Bearing 6007	1	W2.0-03(R)-03A-04	
6	O Ring 58×1.8	1	GB/T3452.1	
7	Pin φ8X16	2	GB/T119.1	

HST Connector (Canopy Type)

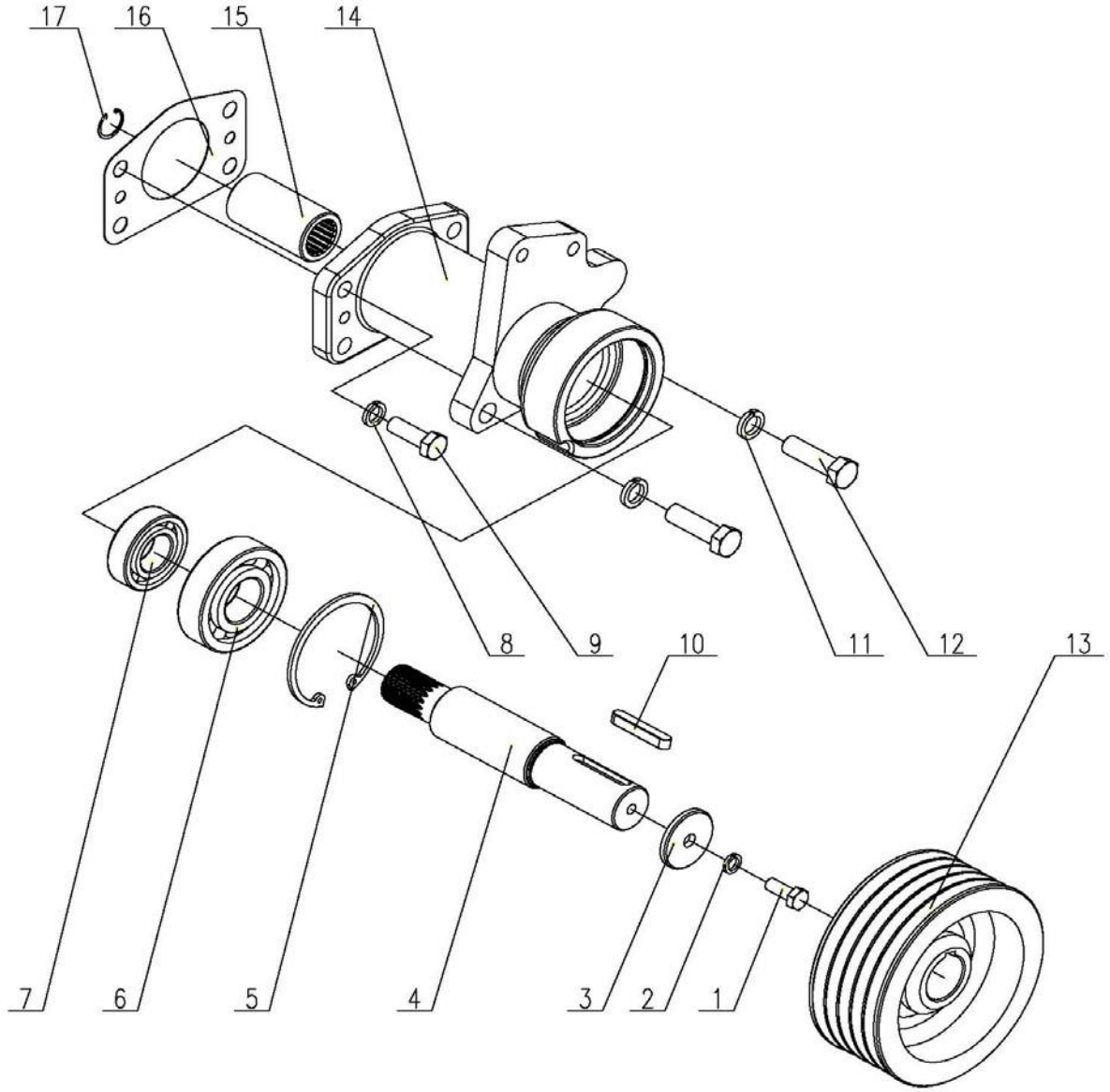

HST Connector (Canopy Type)

NO.	Description	QTY	Part Code	Note
1	Bolt M8×20	1	GB/T5783	
2	Washer 8	1	GB/T93	
3	Plate	1	W2.5C-03D-10-07	
4	Spline Shaft	1	W2.5C-03D-10-05	
5	Retaining Ring 72	1	GB/T893.1	
6	HST Bearing 6306-RS	1	W2.5D-03-10-12	
7	HST Bearing 6205-RS	1	W2.0-03-10A-17	
8	Washer 10	4	GB/T93	
9	Bolt M10×30	4	GB/T5783	
10	Key 8×45	1	GB/T1096	
11	Washer 12	2	GB/T93	
12	Bolt M12×40	2	GB/T5783	
13	Belt Pulley	1	W2.5C-03D-10-06	
14	Flange Plate	1	W2.5C-03D-10-04	
15	Spline Sleeve	1	W2.0-03-10-03	
16	Gasket	1	W2.0-03(R)-10-12	
17	Retaining Ring for Bore 23	1	GB/T893.1	

HST Connector (Cabin Type)

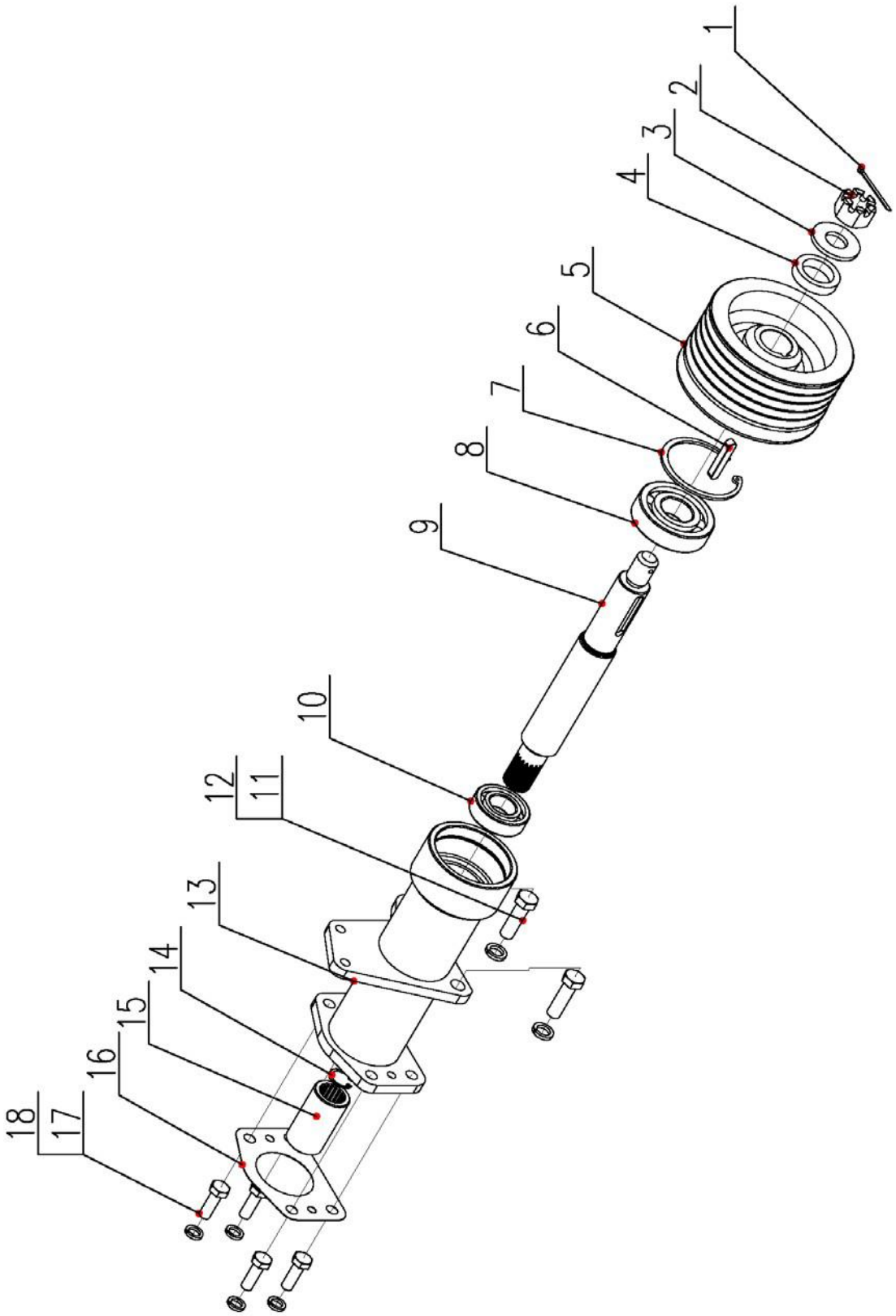

HST Connector (Cabin Type)

NO.	Description	QTY	Part Code	Note
1	Pin 4×32	1	GB/T91	
2	Nut M20	1	GB/T6181	
3	Retaining Ring	1	WD.4M.10-06	
4	Sleeve	1	W2.5E-03A-10-01	
5	Belt Pulley	1	W2.5C-03D-10-06A	
6	Key 8×45	1	GB/T1096	
7	Circlip for Bore 72	1	GB/T893.1	
8	HST Bearing 6306-RS	1	W2.5D-03-10-12	
9	Spline Shaft	1	WD.4M.10-02	
10	HST Bearing 6205-RS	1	W2.0-03-10A-17	
11	Bolt M12×40	2	GB/T5783	
12	Washer 12	2	GB/T93	
13	Flange Plate Weld	1	W2.5E-03B-10-01-00	
14	Circlip for Bore 23	1	GB/T893.1	
15	Spline Sleeve	1	W2.0-03-10-03	
16	Gasket	1	W2.0-03(R)-10-12	
17	Bolt M10×30	4	GB/T5783	
18	Washer 10	4	GB/T93	

Working Tension Pulley Assy

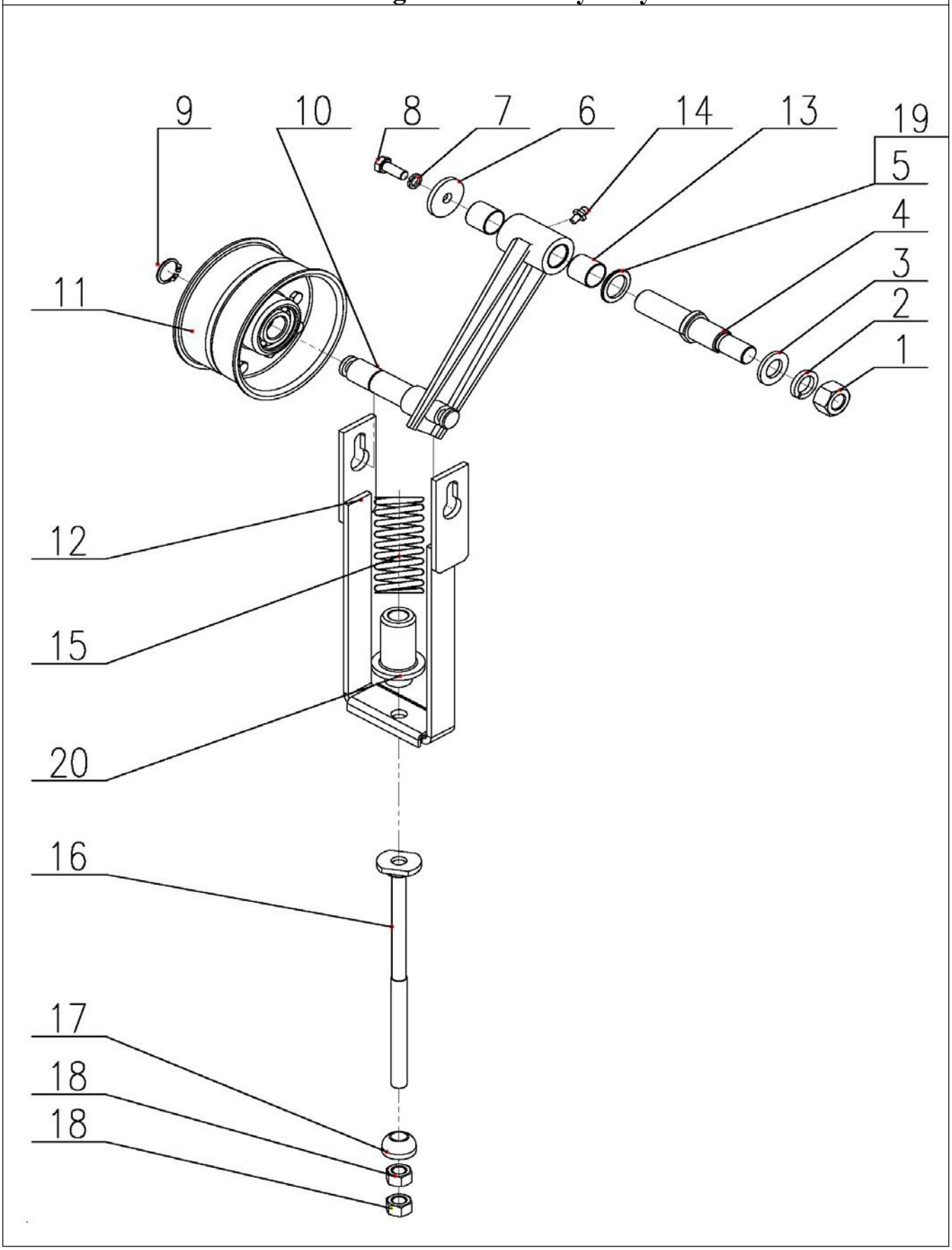

Working Tension Pulley Assy

NO.	Description	QTY	Part Code	Note
1	Nut M16	1	GB/T6170	
2	Washer 16	1	GB/T93	
3	Washer 16	1	GB/T97.1	
4	Tension Shaft	1	W2.5D-03-10-02	
5	Plate, Adjusting	1	W2.5D-03-10-07	
6	Washer	1	W2.5D-03-10-08	
7	Washer 8	1	GB/T93	
8	Bolt M8×20	1	GB/T5783	
9	Retaining Ring for Shaft 20	1	GB/T894.2	
10	Tension Arm Weld	1	W2.5DA-03H-17C-01-00	
11	Tension Pulley Assy	1	W2.5K-02SA-09A-01-00	
12	Plate Weld	1	W2.5DA-03H-17C-08-00	
13	Bearing	2	W2.5D-03-10-11-02	
14	Oil Cup M6	1	GB/T1152	
15	Spring	1	W2.5DA-03H-17A-05A	
16	Rod Weld	1	W2.5DA-03H-17A-06-00	
17	Ball Seat	1	W2.5-03-10-03	
18	Nut M12	2	GB/T6170	
19	Plate, Adjusting	1	W2.5D-03-10-07	
20	Nylon Sleeve	1	W2.5DA-03H-17B-10	

Safety Railing Assy

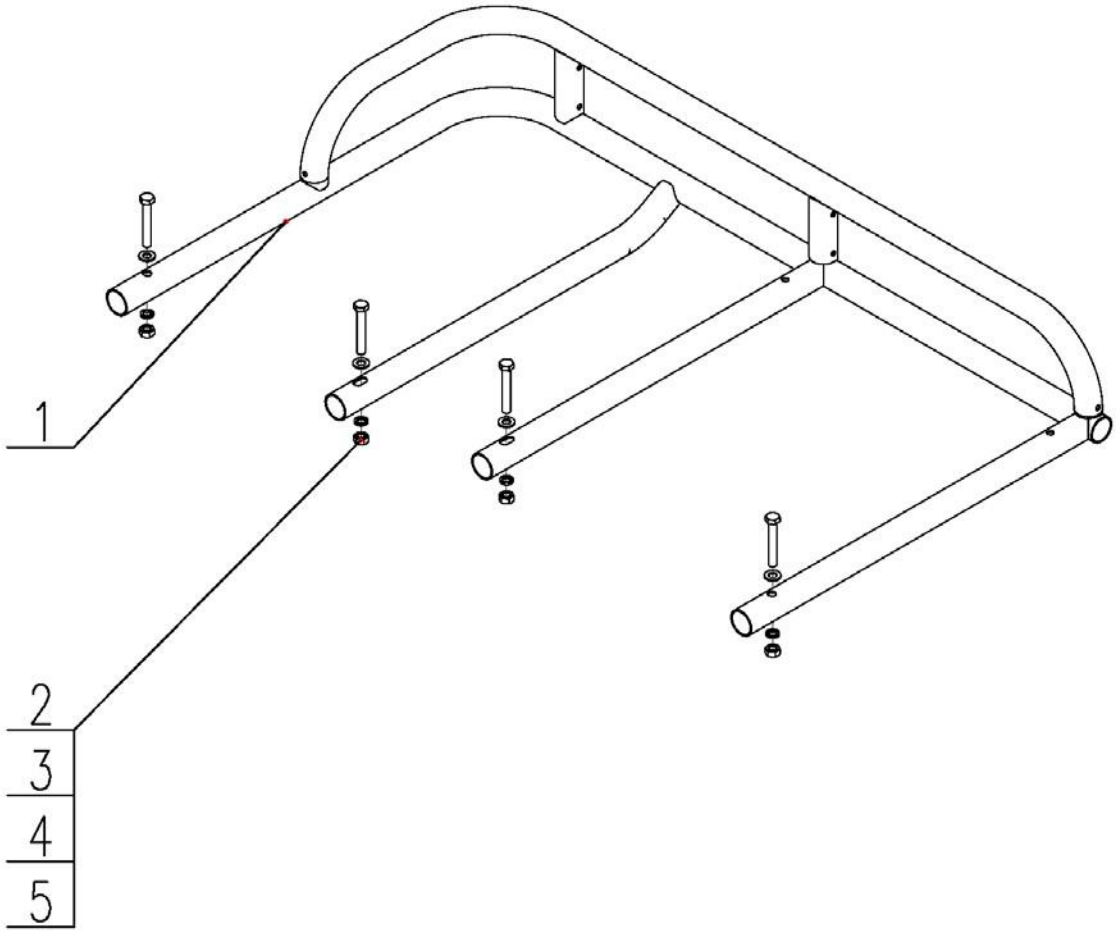

Safety Railing Assy

NO.	Description	QTY	Part Code	Note
1	Bolt M10×60	4	GB/T5782	
2	Washer 10	4	GB/T97.1	
3	Nut M10	4	GB/T6170	
4	Washer 10	4	GB/T93	
5	Safety Railing Weld	1	W2.5DA-03HX-18-01-00	

Pedal Assy (Cabin Type)

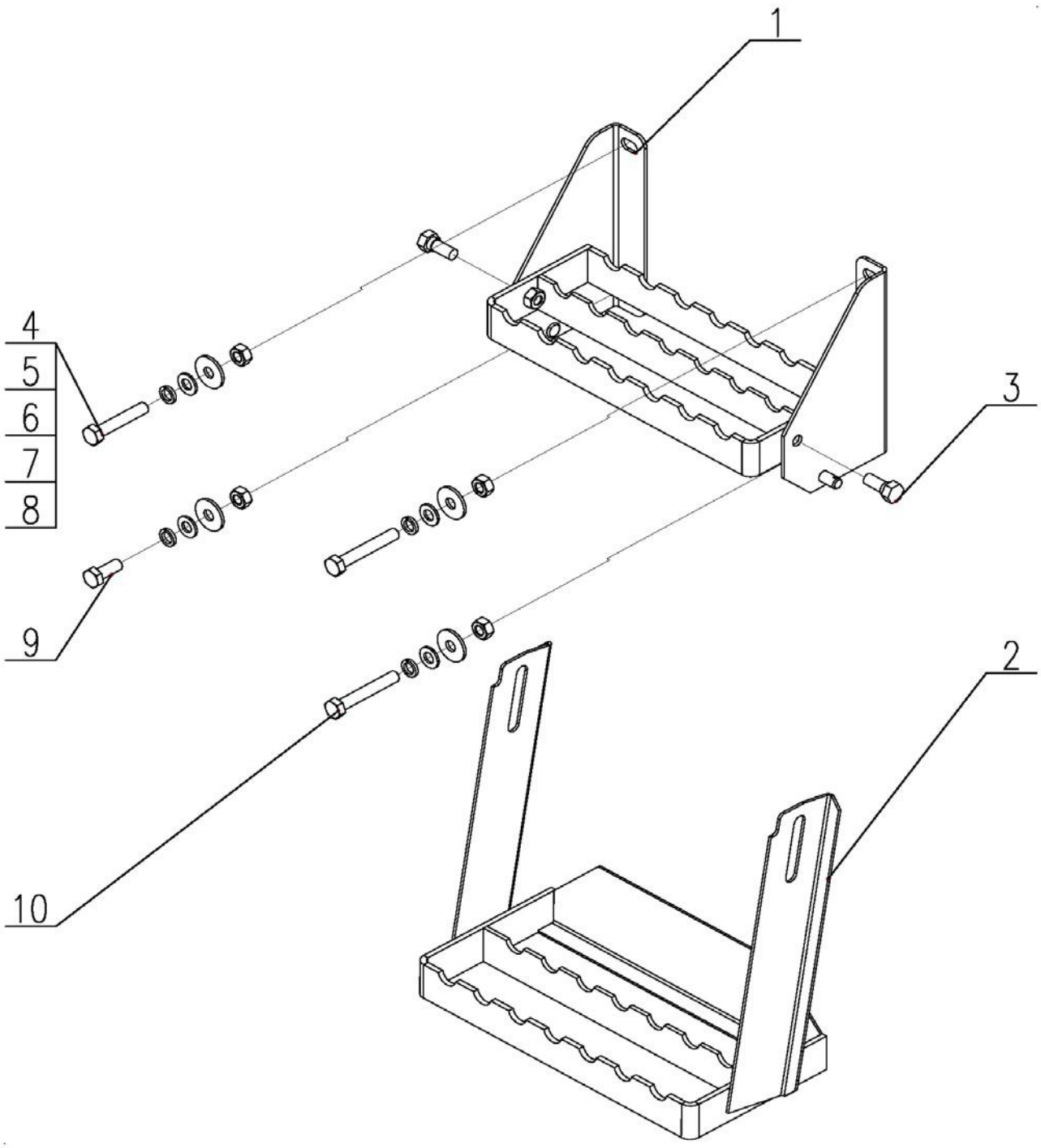

Pedal Assy (Cabin Type)

NO.	Description	QTY	Part Code	Note
1	Pedal Assy , Upper	1	W3.5-03A-16-01-00	
2	Pedal Assy , Lower	1	W2.5DA-03H-16-02-00	
3	Rotating Shaft	2	W2.5DA-03H-16-03	
4	Bolt M10×55	1	GB/T5782	
5	Spring Washer 10	4	GB/T93	
6	Washer 10	4	GB/T97.1	
7	Washer, Big 10	4	GB/T96	
8	Nut M10	4	GB/T6170	
9	Bolt M10×25	1	GB/T5783	
10	Bolt M10×65	2	GB/T5782	

Pedal Assy (Canopy)

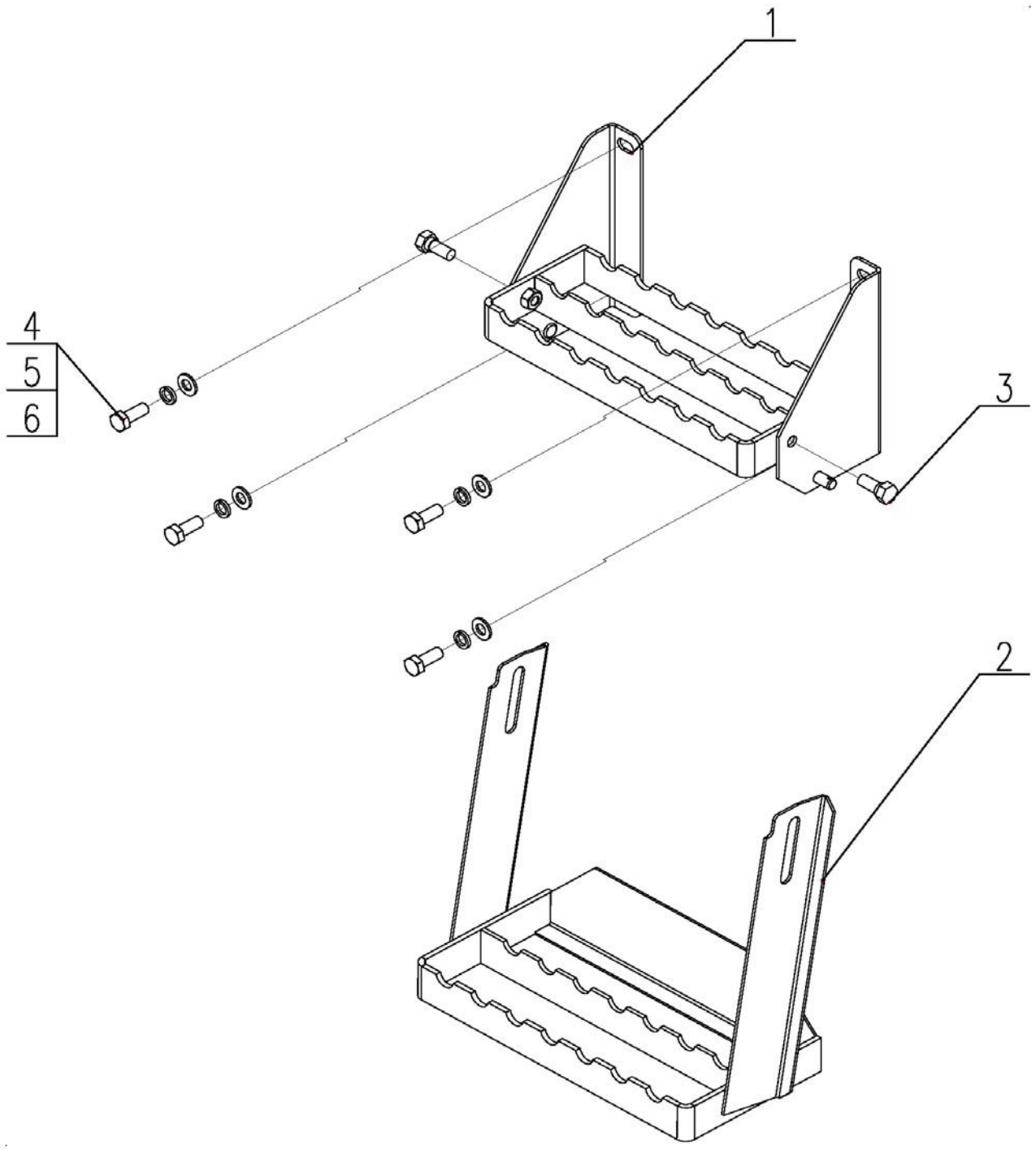

Pedal Assy (Canopy)

NO.	Description	QTY	Part Code	Note
1	Pedal Assy , Upper	1	W3.5B-03-16-01-00	
2	Pedal Assy , Lower	1	W3.5B-03-16-02-00	
3	Rotating Shaft	2	W2.5DA-03H-16-03	
4	Bolt M10×55	4	GB/T5783	
5	Spring Washer 10	4	GB/T93	
6	Washer 10	4	GB/T97.1	

Support Roller Assy

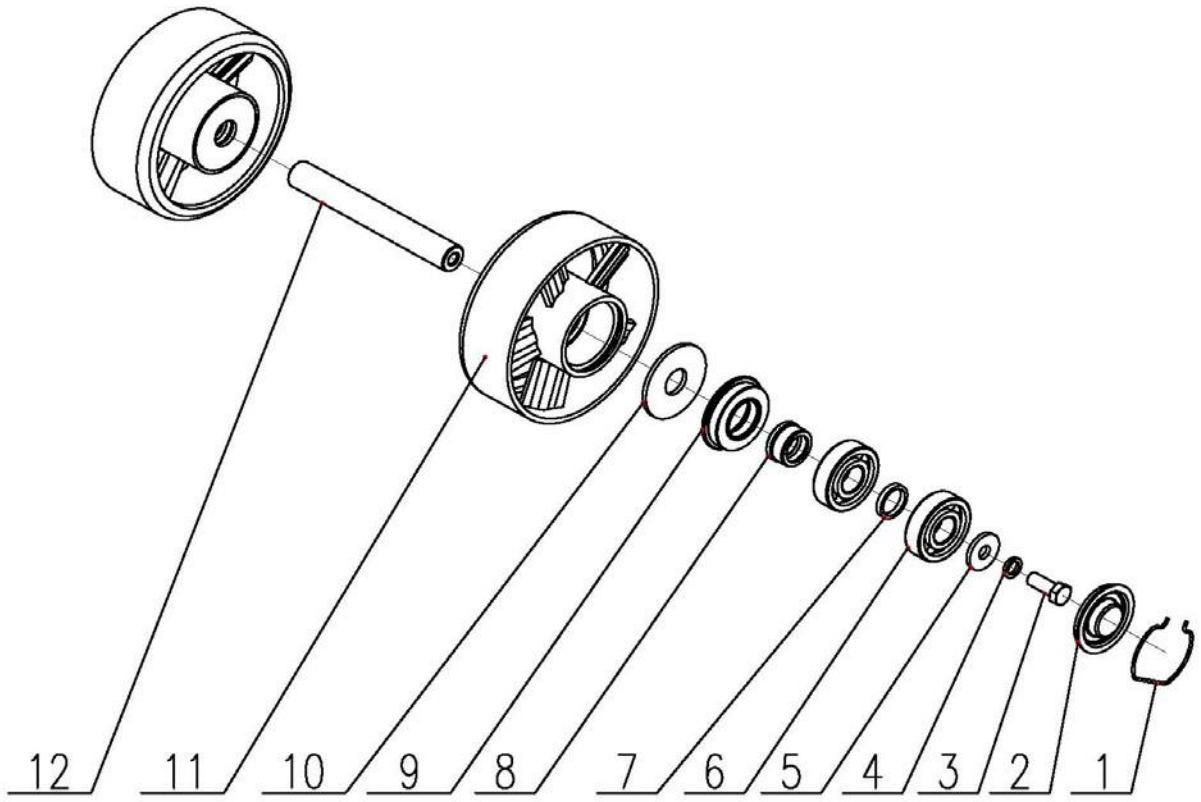

Support Roller Assy

NO.	Description	QTY	Part Code	Note
1	Retaining Ring	2	W1.8-33-06-08	
2	Cover	2	W1.8-33-06-01	
3	Bolt M12×1.5×30	2	GB/T5786	
4	Washer 12	2	GB/T93	
5	Washer	2	W1.8-33-06-07	
6	Bearing 6305-RS/P6, Support Roller	4	W2.5DX-03C-06-02	
7	Sleeve	2	W1.8-33-06-02	
8	Sleeve	2	W2.5DX-03C-06-05-00	
9	Oil Seal Assy	2	W1.8-33-06-04-00A	
10	Press Cover, Outside	2	W2.5DX-03C-06-10	
11	Support Roller Weld	2	W2.5DX-03C-06-01-00	
12	Shaft	1	WD.4MC.32-06	

Balance Roller Assy

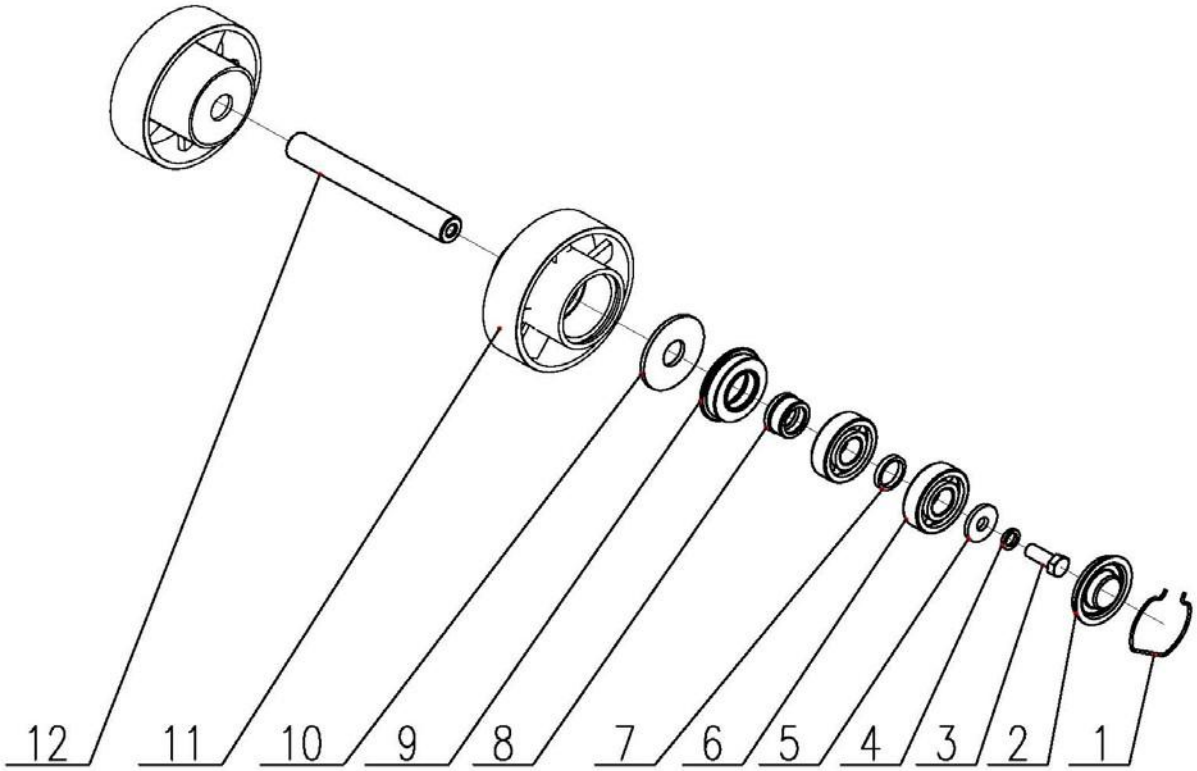

Balance Roller Assy

NO.	Description	QTY	Part Code	Note
1	Retaining Ring	2	W1.8-33-06-08	
2	Cover	2	W1.8-33-06-01	
3	Bolt M12×1.5×30	2	GB/T5786	
4	Washer 12	2	GB/T93	
5	Washer	2	W1.8-33-06-07	
6	Bearing 6305-RS/P6, Support Roller	4	W2.5DX-03C-06-02	
7	Sleeve	2	W1.8-33-06-02	
8	Sleeve	2	W2.5DX-03C-06-05-00	
9	Oil Seal Assy	2	W1.8-33-06-04-00A	
10	Press Cover, Outside	2	W2.5DX-03C-06-10	
11	Balance Roller Weld	2	W2.5DX-03C-07-01-00	
12	Shaft	1	WD.4MC.32-06	

Support Roller Assy

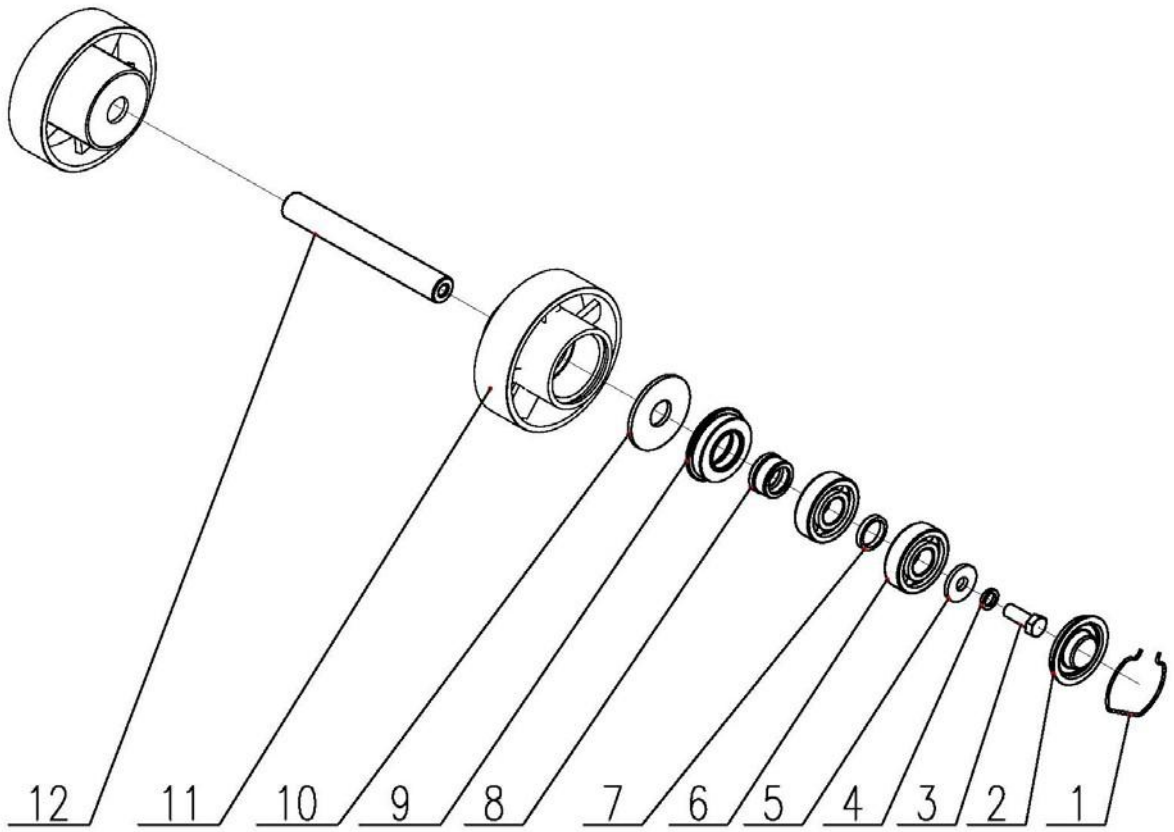

Support Roller Assy

NO.	Description	QTY	Part Code	Note
1	Retaining Ring	2	W1.8-33-06-08	
2	Cover	2	W1.8-33-06-01	
3	Bolt M12×1.5×30	2	GB/T5786	
4	Washer 12	2	GB/T93	
5	Washer	2	W1.8-33-06-07	
6	Bearing 6305-RS/P6, Support Roller	4	W2.5DX-03C-06-02	
7	Sleeve	2	W1.8-33-06-02	
8	Sleeve	2	W2.5DX-03C-06-05-00	
9	Oil Seal Assy	2	W1.8-33-06-04-00A	
10	Press Cover, Outside	2	W2.5DX-03C-06-10	
11	Balance Roller Weld	2	W3.5H-03A-28-01-00	
12	Shaft	1	WD.4ME.28-06	

Tension Pulley Assy

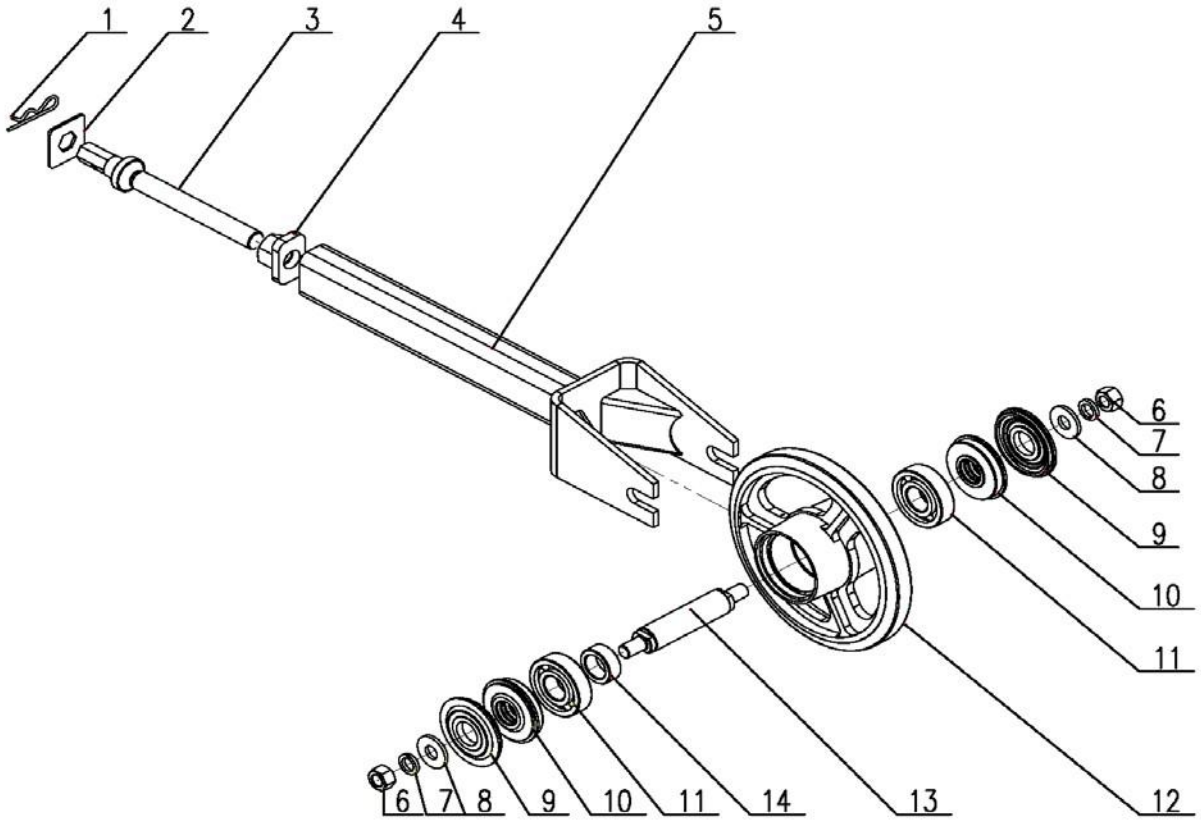

Tension Pulley Assy

NO.	Description	QTY	Part Code	Note
1	Spring pin	1	W2.5DA-03H-27-10	
2	Plate, Limiter	1	WD.4FE.27-04	
3	Adjusting Screw	1	WD.4FE.27-03	
4	Plate Weld, Limiter	1	WD.4FE.27.1	
5	Frame Weld, Tension	1	WD.4ME.27.2A	
6	Nut M16	2	GB/T6170	
7	Washer 16	2	GB/T93	
8	Retaining Ring	2	L18X.4.27-04	
9	Press Plate	2	L18X.4.29-02	
10	Oil Seal Assy	2	W2.5DA-03H-27-06-00B	
11	Bearing 6306-RS/P63, Tension Pulley, Rubber Track	2	W2.5DA-03H-27-12	
12	Tension Pulley	1	WD.4MC.27-01	
13	Tension Pulley Shaft	1	W2.5DA-03B-27-08	
14	Sleeve	1	L18X.4.27-03	

Middle Support Assy

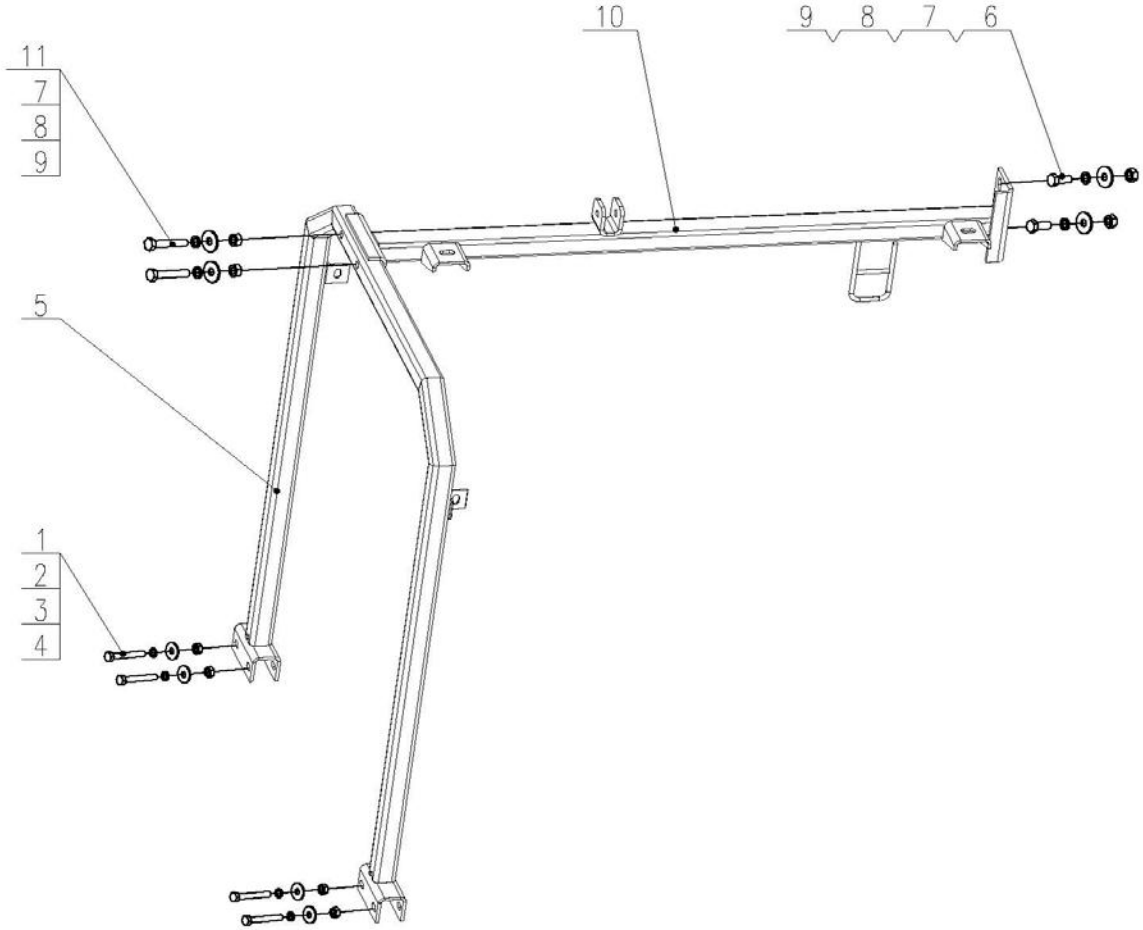

Middle Support Assy

NO.	Description	QTY	Part Code	Note
1.	Bolt M8×55	4	GB/T5783	
2.	Washer 8	4	GB/T93	
3.	Washer 8	8	GB/T96	
4.	Nut M8	4	GB/T6170	
5.	Support Frame Assy, Middle	1	W2.5M-03F-50-01-00	
6.	Bolt M10×25	2	GB/T5783	
7.	Washer 10	8	GB/T96	
8.	Washer 10	8	GB/T93	
9.	Nut M10	4	GB/T6170	
10.	Support Weld, Middle	1	W2.5M-03F-50-02-00	
11.	Bolt M10×55	2	GB/T5783	

V Engine

(Sack Type)

Engine Assy W3.5H-09X-01-00 (Sack Type)

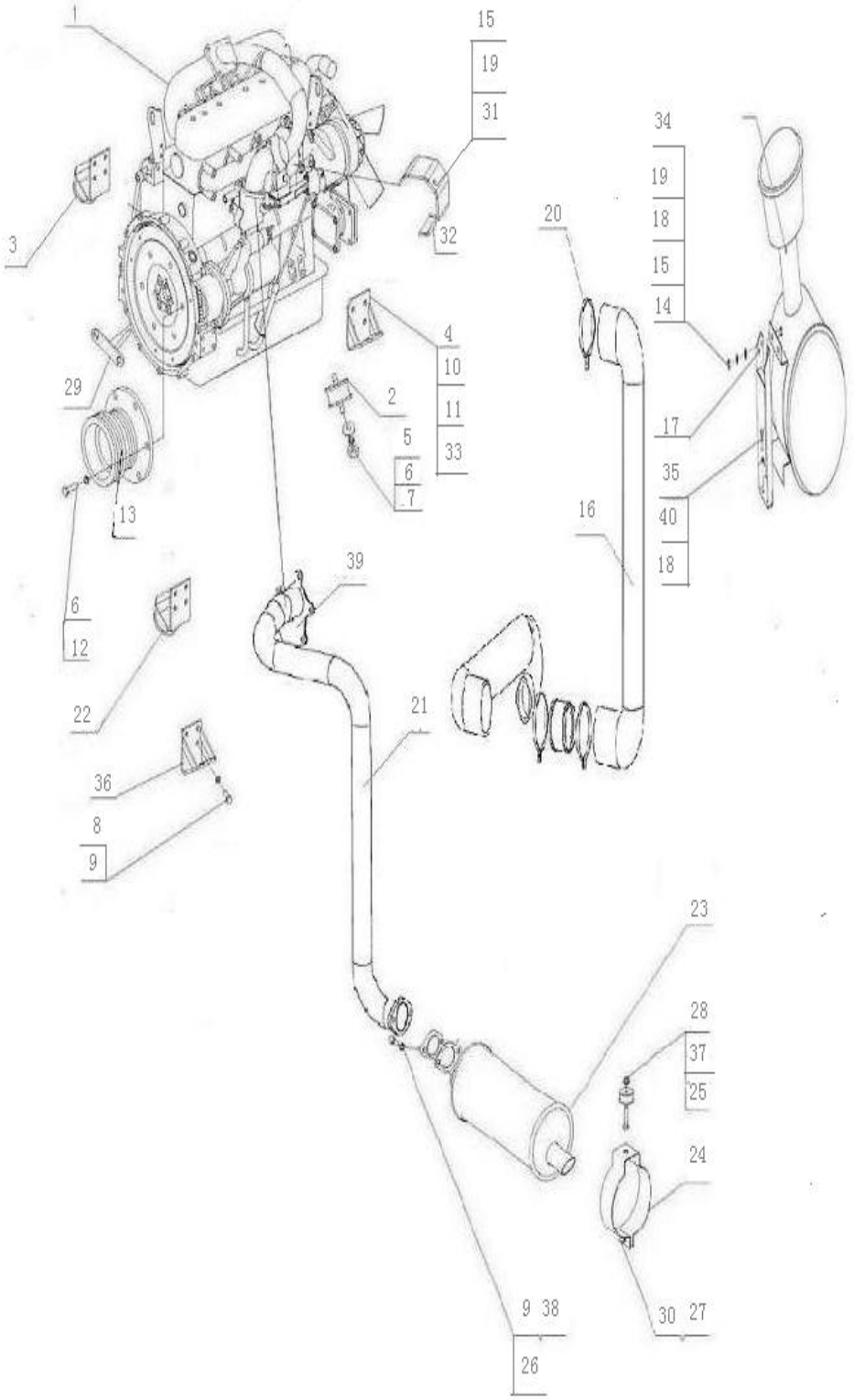

Engine Assy W3.5H-09X-01-00 (Sack Type)

NO.	Description	QTY	Part Code	Note
1	Engine (74.5KW)	1	4G33TC-2017218	
2	Shock-absorbing Cushions, Engine	3	W2.0-03-05-09-00	
3	Supporter, Engine, Front, External	1	W2.5C-03-05-04-00	
4	Supporter, Engine, Rear, External	1	W2.5C-03-05-03-00	
5	Nut M12×1.5	6	GB6176-86	
6	Cushion12	12	GB93-87	
7	Washer, Big 12	5	GB96-85	
8	Bolt M10×25	10	GB5783-86	
9	Cushion 10	16	GB93-87	
10	Bolt M14x30	8	GB5783-86	
11	Cushion 14	8	GB93-87	
12	Bolt M12×40	6	GB5783-86	
13	Belt Pulley, Engine	1	W2.5C-03D-05G-02	
14	Nut M8	8	GB6170-86	
15	Cushion 8	12	GB93-87	
16	Air Intake Hose Assy	1	W3.5H-09-01-01-00	
17	Air Filter	1	W2.5DA-03H-05-12-00	
18	Bolt M8×20	6	GB5783-86	
19	Washer, Plain 8	12	GB97.1-85	
20	Throat Hoop, Steel, 60-80	2	Q67676	
21	Exhaust Hose Weld	1	W3.5-09A-01-14-00	
22	Internal Support, Engine	1	W2.5-03-05-04-00	
23	Muffler	1	W3.5-09A-01-10-00	
24	Hoop Weld	1	W2.0-03-05-13-00	
25	Bolt M10×50	1	GB5782-86	
26	Nut M10	5	GB6170-86	
27	Washer, Plain 10	15	GB97.1-85	
28	Cushion	1	WD.20-03	
29	Rod Weld, Limiter, Belt	1	W2.5DA-03H-05D-05-00	
30	Bolt M10X35	1	GB5783-86	
31	Bolt M8X16	3	GB5783-86	
32	Thermal Baffle, Air Intake Hose	1	W2.5DA-03EK-05-13	
33	Fixing Bracket, Oil Hose	1	W2.5D-03-05-01	
34	Fixing Bracket Weld, Air Filter	1	W2.5D-03-05-09-00	
35	Cushion 8	2	GB93-87	
36	Supporter, Engine, Front, Internal	1	W2.5DA-03A-05-01-00	
37	Steel Sleeve, Shock-absorbing	1	W2.5DA-03H-05-13	1
38	Bolt M10X30	2	GB5783-86	
39	Gasket, Exhaust Hose	1	W2.5DA-03EK-05-15	

Fuel Tank Assy W2.5DA-03H-04-00SP

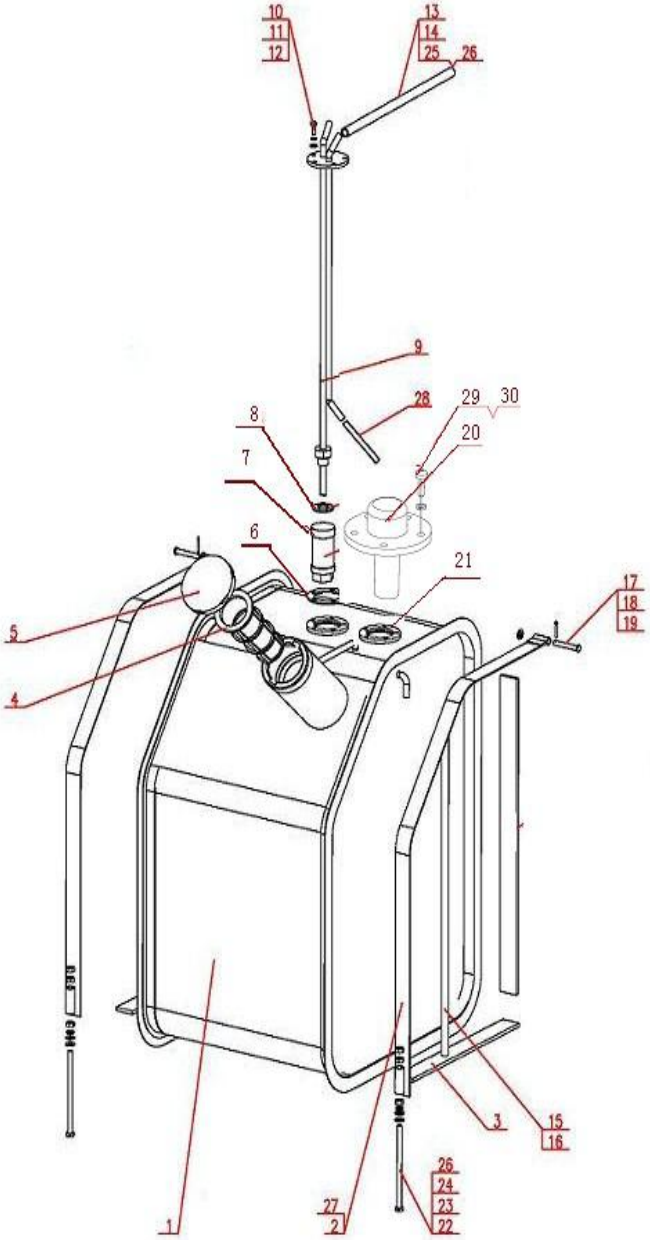

Fuel Tank Assy W2.5DA-03H-04-00SP

NO.	Description	QTY	Part Code	Note
1	Fuel Tank Weld	1	W2.5DA-03H-04-02-00SP	
2	Steel Flat Bar, Fuel Tank Fixing	2	W2.5DA-03H-04-05-00	
3	Sponge, Bottom	2	W2.5DA-03H-04-06	
4	Strainer	1	WD.4FE.8-02	
5	Cover Assy , Fuel Filling	1	W2.5DA-03H-04-01-00SP	
6	Plate	1	W2.0-03-04-06	
7	Strainer, Fuel Absorption	1	W2.0-03-04-08-03	
8	Washer 18	1	JB982-77	
9	Fuel Absorption Pipe Assy	1	W2.5DA-03H-04-08-00	
10	Bolt M6X16	5	GB/T5783-86	
11	Gasket 6	5	GB/93-87	
12	Gasket 6	5	GB97.1-85	
13	Fuel Intake Hose	1	W2.5-03-04-03	
14	Throat Hoop Ø12~Ø20	7	HG	
15	Display Hose, Fuel Level	1	W2.5DA-03H-04-04	
16	Throat Hoop ØC9～ØC13	2	HG	
17	Pin Shaft C8X50	2	GB882-86	
18	Pin 3.2×18	2	GB91-86	
19	Washer 8	2	GB97.1-85	
20	Fuel Level Sensor	1	W3.5H-09-02-01	
21	Rubber Cushion, Sensor	1	4LZ2A.19.1-03	
22	Nut M8	6	GB6170-86	
23	Bolt M8X120	2	GB5783-86	Sack Type
24	Gasket 8	4	GB97.1-85	
25	Sponge, Steel Flat Bar	2	W2.5DA-03H-04-07	
26	Gasket 8	2	GB93-87	
27	Fuel Outlet Hose	1	W2.5DA-03H-04-11	
28	Connecting Hose, Oil Returning	1	W2.5DA-03H-04-12	
29	Bolt M5×12	5	GB818-2000	
30	Gasket 5	5	GB93-87	

VI Engine

(Canopy, Grain Tank Type)

Engine Assy W3.5H-09-01-00SP (Upper Exhaust)

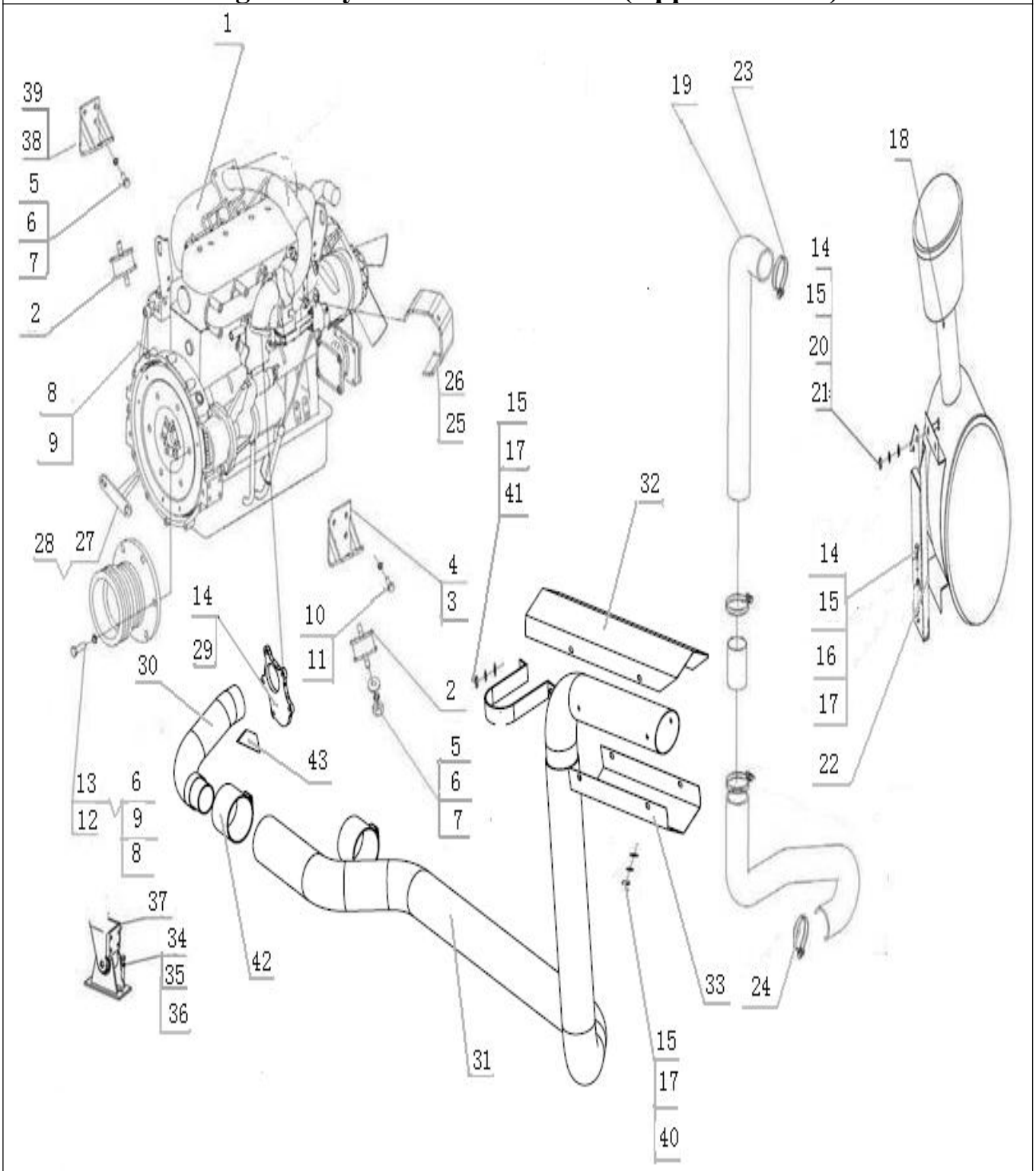

Engine Assy W3.5H-09-01-00SP (Upper Exhaust)				
NO.	**Description**	**QTY**	**Part Code**	**Note**
1	Engine (74.5KW)	1	4G33TC17218	
2	Shock-absorbing Cushions, Engine	3	W2.0-03-05-09-00	
3	Supporter, Engine, Front, External	1	W2.5C-03-05-04-00	
4	Supporter, Engine, Rear, External	1	W2.5C-03-05-03-00	
5	Nut M12×1.5	6	GB/T6176	
6	Cushion 12	12	GB/T93-87	
7	Washer, Big 12	5	GB/T96-85	
8	Bolt M10×25	10	GB5783-86	
9	Cushion 10	16	GB93-87	
10	Bolt M14x30	8	GB5783-86	
11	Cushion 14	8	GB93-87	
12	Bolt M12×40	6	GB5783-86	
13	Belt Pulley, Engine	1	W2.5C-03D-05G-02	
14	Nut M8	13	GB6170-86	
15	Cushion 8	21	GB93-87	
16	Bolt M8×25	4	GB5783-86	
17	Washer, Big 8	10	GB96-85	
18	Air Filter, Dust Self-exhausting	1	K35C9-A	
19	Air Intake Hose Assy	1	W2.5DA-03H-05A-08-00	
20	Bolt M8×20	4	GB5783-86	
21	Washer, Plain 8	13	GB97.1-85	
22	Fixing Bracket Weld, Air Filter	1	W2.5D-03-05-09-00	
23	Throat Hoop, Steel, 70-90	1	Q67676	
24	Throat Hoop, Steel, 60-80	1	Q67676	
25	Bolt M8×16	3	GB5783-86	
26	Thermal Baffle, Air Intake Hose	1	W2.5DA-03EK-05-13	
27	Rod Weld, Limiter, Belt	1	W2.5DA-03H-05D-05-00	
28	Washer, Plain 10	2	GB97.1-85	
29	Gasket, Exhaust Pipe	1	W2.5DA-03EK-05-15	
30	Exhaust Pipe Weld 1	1	W2.5DA-03EK-05-01-00SP	
31	Exhaust Pipe Weld 2	1	W2.5DA-03EK-05-02-00SP	
32	Cover, Upper	1	W2.5DA-03EK-05-03SP	
33	Cover, Lower	1	W2.5DA-03EK-05-04SP	
34	Nut M10	2	GB6170-86	
35	Bolt M10X35	2	GB5783-86	
36	Washer, Big 10	2	GB96-85	
37	Supporter, Engine, Front, Internal	1	W2.5DA-03A-05-01-00	

Engine Assy W3.5H-09-01-00SP (Upper Exhaust)

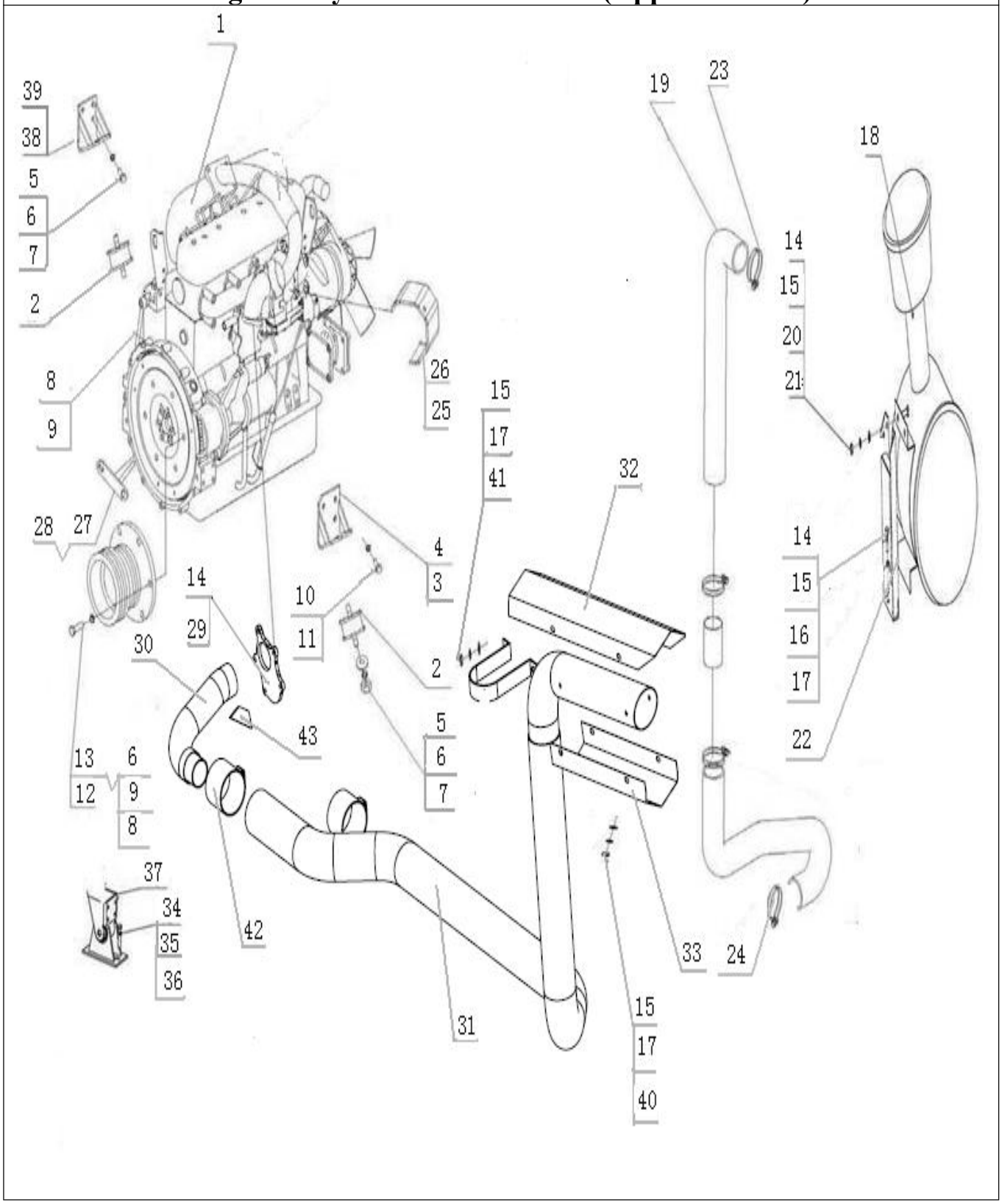

Engine Assy W3.5H-09-01-00SP (Upper Exhaust)

NO.	Description	QTY	Part Code	Note
38	Supporter, Engine, Rear, Internal	1	W2.5-03-05-04-00	
39	Fixing Bracket, Fuel Hose	1	W2.5D-03-05-01	
40	Bolt M8×18	4	GB5783-86	
41	Bolt M8×14	4	GB5783-86	
42	Installation Seat Ⅱ	2	W2.5DA-03EK-05-02-03SP	
43	Reinforced Iron	1	W2.5DA-03EK-05-01-03SP	

Engine Assy ,102HP, Grain Tank (Lower Exhaust)

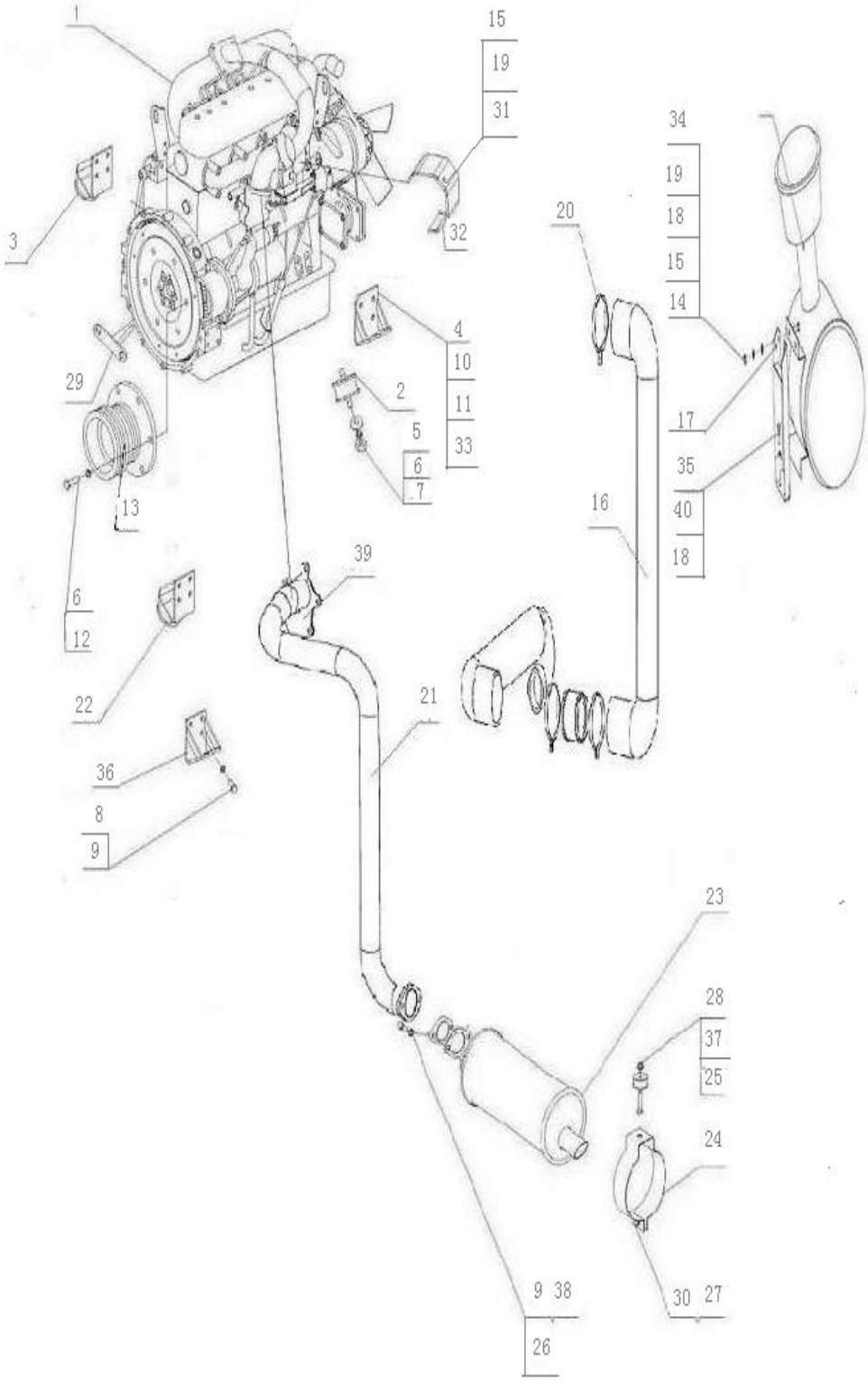

Engine Assy ,102HP, Grain Tank (Lower Exhaust)

NO.	Description	QTY	Part Code	Note
1	Engine (74.5KW)	1	4G33TC-2017218	
2	Shock-absorbing Cushions, Engine	3	W2.0-03-05-09-00	
3	Supporter, Engine, Front, External	1	W2.5C-03-05-04-00	
4	Supporter, Engine, Rear, External	1	W2.5C-03-05-03-00	
5	Nut M12×1.5	6	GB6176-86	
6	Cushion12	12	GB93-87	
7	Washer, Big 12	5	GB96-85	
8	Bolt M10×25	10	GB5783-86	
9	Cushion 10	16	GB93-87	
10	Bolt M14x30	8	GB5783-86	
11	Cushion14	8	GB93-87	
12	Bolt M12×40	6	GB5783-86	
13	Belt Pulley, Engine	1	W2.5C-03D-05G-02	
14	Nut M8	8	GB6170-86	
15	Cushion 8	12	GB93-87	
16	Air Intake Hose Assy	1	W3.5H-09-01-01-00	
17	Air Filter, Dust Self-exhausting	1	K35C9-A	
18	Bolt M8×20	6	GB5783-86	
19	Washer, Plain 8	12	GB97.1-85	
20	Throat Hoop, Steel, 60-80	2	Q67676	
21	Exhaust Pipe Weld	1	W3.5-09A-01-14-00	
22	Supporter, Engine, Internal	1	W2.5-03-05-04-00	
23	Muffler	1	W3.5-09A-01-10-00	
24	Hoop Weld	1	W2.0-03-05-13-00	
25	Bolt M10×50	1	GB5782-86	
26	Nut M10	5	GB6170-86	
27	Washer, Plain 10	15	GB97.1-85	
28	Cushion	1	WD.20-03	
29	Rod Weld, Limiter, Belt	1	W2.5DA-03H-05D-05-00	
30	Bolt M10X35	1	GB5783-86	
31	Bolt M8X16	3	GB5783-86	
32	Thermal Baffle, Air Intake Hose	1	W2.5DA-03EK-05-13	
33	Fixing Bracket, Fuel Hose	1	W2.5D-03-05-01	
34	Fixing Bracket Weld, Air Filter	1	W2.5D-03-05-09-00	
35	Cushion 8	2	GB93-87	
36	Supporter, Engine, Front, Internal	1	W2.5DA-03A-05-01-00	
37	Steel Sleeve, Shock-absorbing	1	W2.5DA-03H-05-13	
38	Bolt M10X30	2	GB5783-86	
39	Gasket, Exhaust Pipe	1	W2.5DA-03EK-05-15	

Fuel Tank Assy

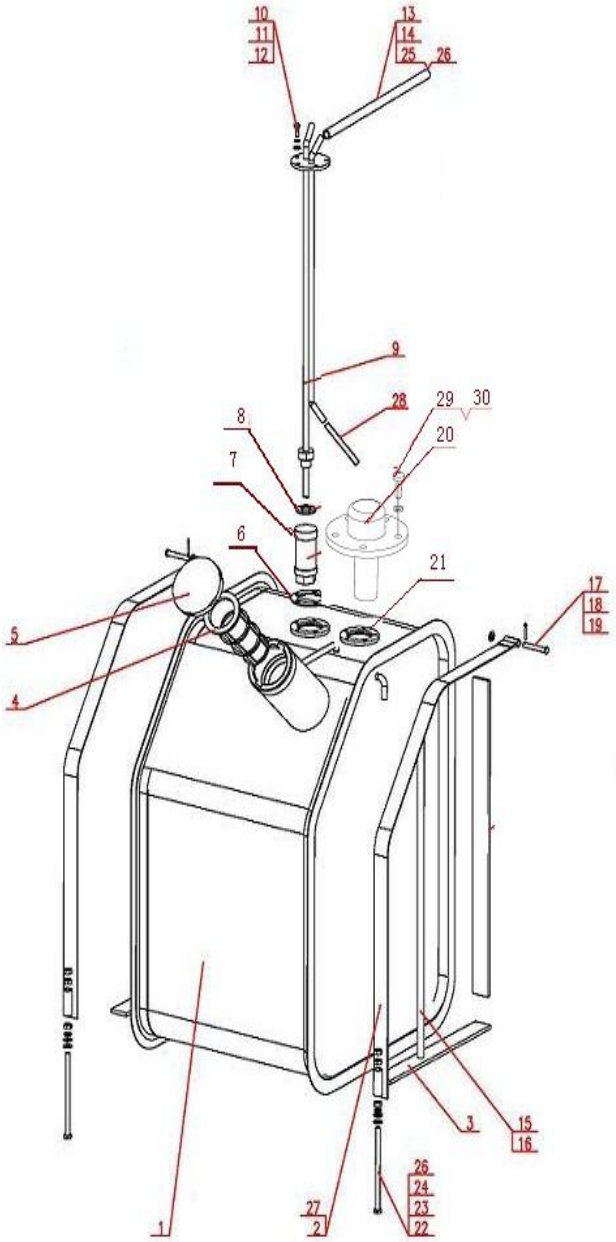

Fuel Tank Assy

NO.	Description	QTY	Part Code	Note
1	Fuel Tank Weld	1	W2.5DA-03H-04-02-00SP	
2	Steel Flat Bar, Fuel Tank Fixing	2	W2.5DA-03H-04-05-00	
3	Sponge, Bottom	2	W2.5DA-03H-04-06	
4	Strainer	1	WD.4FE.8-02	
5	Cover Assy , Fuel Filling	1	W2.5DA-03H-04-01-00SP	
6	Plate	1	W2.0-03-04-06	
7	Strainer, Fuel Absorption	1	W2.0-03-04-08-03	
8	Washer 18	1	JB982-77	
9	Pipe Assy, Fuel Absorption	1	W2.5DA-03H-04-08-00	
10	Bolt M6X16	5	GB/T5783-86	
11	Gasket 6	5	GB/93-87	
12	Gasket 6	5	GB97.1-85	
13	Fuel Intake Hose	1	W2.5-03-04-03	
14	Throat Hoop Ø12~Ø20	7	HG	
15	Display Hose, Fuel Level	1	W2.5DA-03H-04-04	
16	Throat Hoop ØC9～ØC13	2	HG	
17	Pin Shaft C8X50	2	GB882-86	
18	Pin 3.2×18	2	GB91-86	
19	Washer 8	2	GB97.1-85	
20	Fuel Level Sensor	1	W3.5H-09-02-01	
21	Rubber Cushion, Sensor	1	4LZ2A.19.1-03	
22	Nut M8	6	GB6170-86	
23	Bolt M8X120	2	GB5783-86	
24	Gasket 8	4	GB97.1-85	
25	Sponge, Steel Flat Bar	2	W2.5DA-03H-04-07	
26	Gasket 8	2	GB93-87	
27	Fuel Outlet Hose	1	W2.5DA-03H-04-11	
28	Connecting Hose, Oil Returning	1	W2.5DA-03H-04-12	
29	Bolt M5×12	5	GB818-2000	
30	Gasket 5	5	GB93-87	

VII Engine

(Cabin Type)

Engine Assy W3.5H-09F-01-00SP(Upper Exhaust)

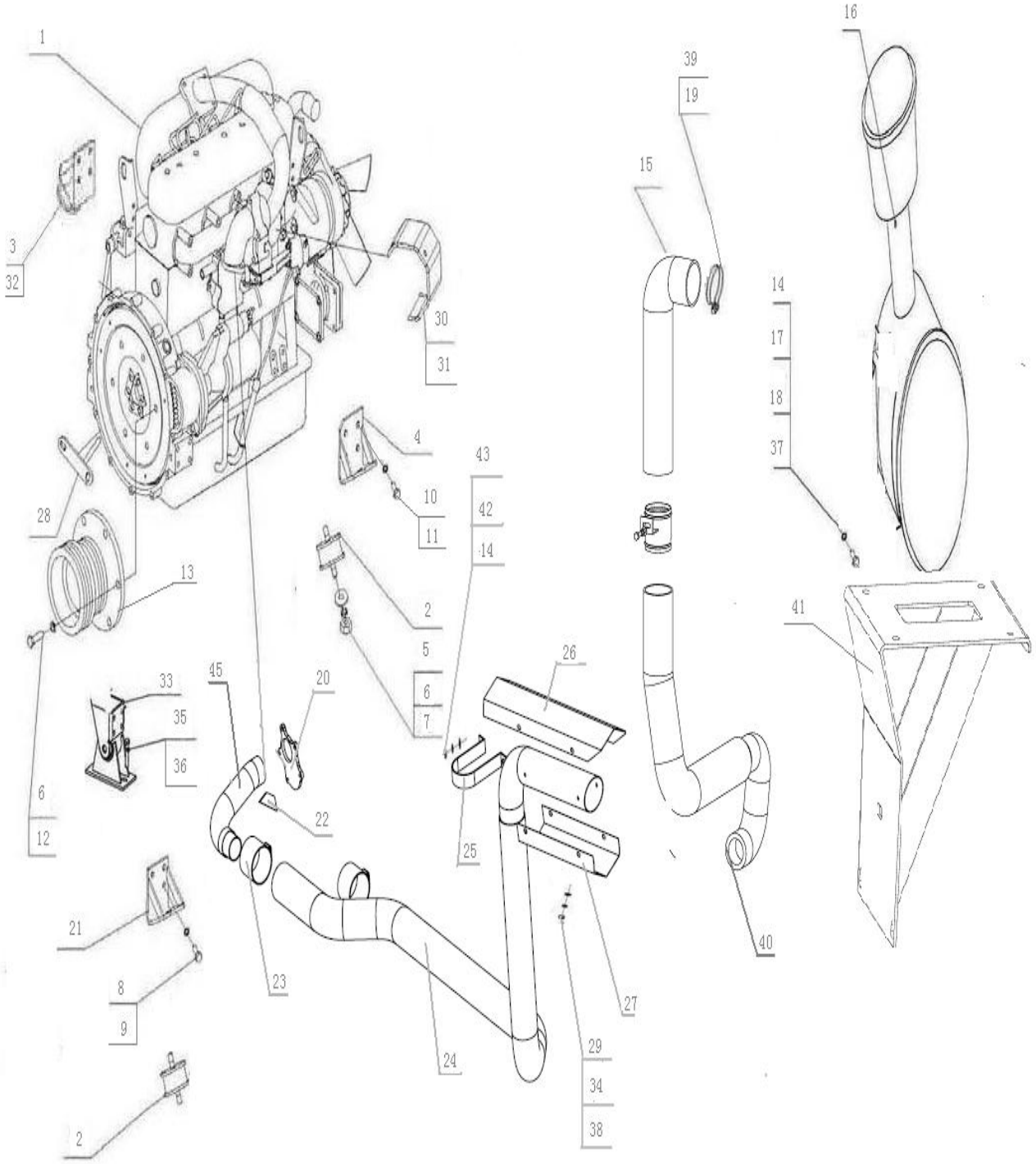

Engine Assy W3.5H-09F-01-00SP(Upper Exhaust)				
NO.	**Description**	**QTY**	**Part Code**	**Note**
1	Engine Power 102HP	1	74.5KW/1500W/12V/2600RPM	
2	Shock-absorbing Cushions, Engine	3	W2.0-03-05-09-00	
3	Support, Engine, Front, External	1	W2.5C-03-05-04-00	
4	Support, Engine, Rear, External	1	W2.5C-03-05-03-00	
5	Nut M12×1.5	6	GB6176-86	
6	Cushion12	12	GB93-87	
7	Washer, Big 12	5	GB96-85	
8	Bolt M10×25	10	GB5783-86	
9	Cushion 10	16	GB93-87	
10	Bolt M14x30	8	GB5783-86	
11	Cushion 14	8	GB93-87	
12	Bolt M12×40	6	GB5783-86	
13	Belt Pulley, Engine	1	W5.0-03A-05-02	
14	Cushion 8	23	GB93-87	
15	Air Intake Hose Assy	1	W2.5M-03F-05-08-00	
16	Air Filter, Dust Self-exhausting	1	W2.5M-03F-05-12-00A	
17	Bolt M8×20	6	GB5783-86	
18	Washer, Plain 8	16	GB97.1-85	
19	Throat Hoop, Steel, 60-80	1	Q67676	
20	Plate Seat	1	W2.5DA-03EK-05-01-01SP	
21	Supporter, Engine, Internal	1	W2.5-03-05-04-00	
22	Reinforced Iron	1	W2.5DA-03EK-05-01-03SP	
23	Installation Seat 2	2	W2.5DA-03EK-05-02-03SP	
24	Exhaust Pipe Weld 2	1	W2.5DA-03EK-05-02-00SP	
25	Installation Seat	1	W2.5DA-03EK-05-02-02SP	
26	Cover, Upper	1	W2.5DA-03EK-05-03SP	
27	Cover, Lower	1	W2.5DA-03EK-05-04SP	
28	Rod Weld, Limiter, Belt	1	W2.5DA-03H-05D-05-00	
29	Bolt M8×14	4	GB/T5783-86	
30	Bolt M8X16	3	GB5783-86	
31	Thermal Baffle, Air Intake Hose	1	W2.5DA-03EK-05-13	
32	Fixing Bracket, Fuel Hose	1	W2.5D-03-05-01	
33	Supporter, Engine, Front,	1	W2.5DA-03A-05-01-00	
34	Nut M8	4	GB6170-86	
35	Bolt M10×30	2	GB5783-86	

Engine Assy W3.5H-09F-01-00SP(Upper Exhaust)

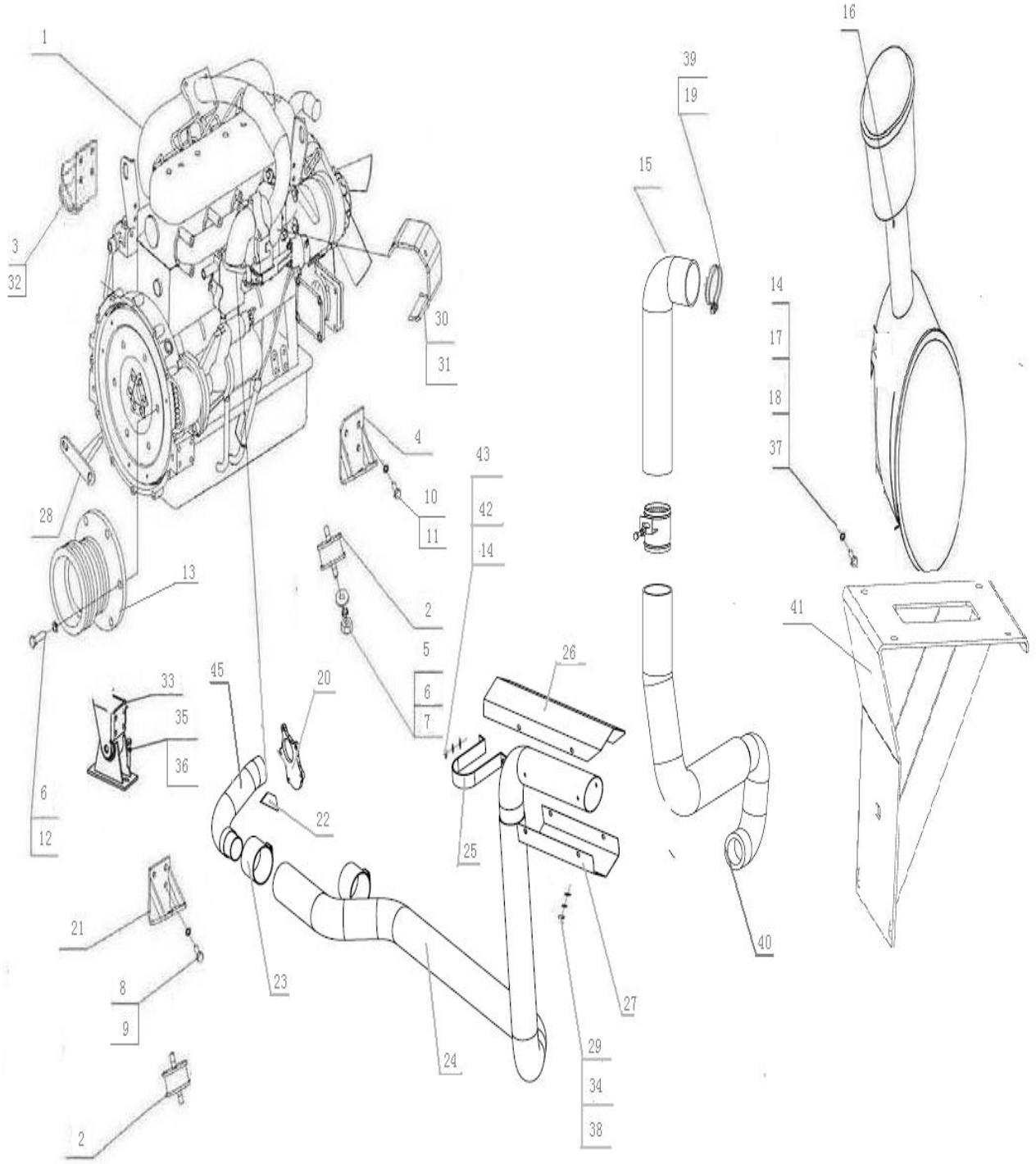

Engine Assy W3.5H-09F-01-00SP(Upper Exhaust)				
NO.	**Description**	**QTY**	**Part Code**	**Note**
36	Washer, Big 10	4	GB96-85	
37	Nut M8	9	GB6170-86	
38	Nut M8	4	GB804-88	
39	Throat Hoop, Steel, 70-90	1	Q67676	
40	Gasket, Exhaust Pipe	1	W2.5DA-03EK-05-15	
41	Gasket Assy, Air Filter	1	W2.5M-03F-05-04-00	
42	Bolt M8X18	4	GB5783-86	
43	Washer, Plain, Big 8	8	GB96-85	
44	Belt Pulley, Engine	1	W5.0-03D-05-02	
45	Exhaust Hose Weld Ⅰ	1	W2.5DA-03EK-05-01-00SP	

Engine Assy W3.5H-09F-01-00(Lower Exhaust)

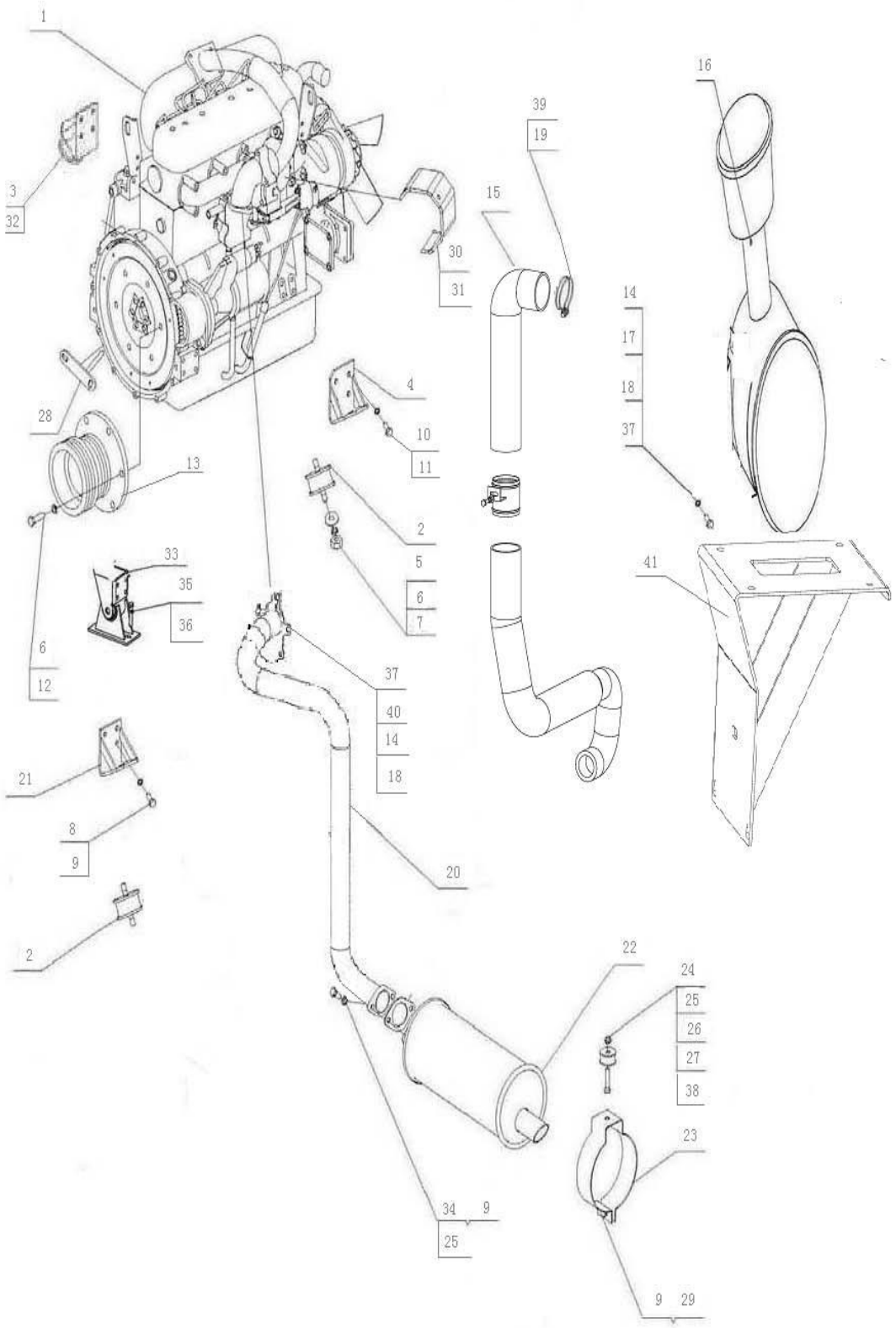

Engine Assy W3.5H-09F-01-00(Lower Exhaust)				
NO.	**Description**	**QTY**	**Part Code**	**Note**
1	74.5kw,1500W,12V,2600r/min 4G33TC-2017219	1	Changchai 102HP	
2	Shock-absorbing Cushions, Engine	3	W2.0-03-05-09-00	
3	Supporter, Engine, Front, External	1	W2.5M-03F-05-01-00	
4	Supporter, Engine, Rear, External	1	W2.5C-03-05-03-00	
5	Nut M12×1.5	6	GB6176-86	
6	Cushion12	12	GB93-87	
7	Washer, Big 12	5	GB96-85	
8	Bolt M10×25	10	GB5783-86	
9	Cushion 10	19	GB93-87	
10	Bolt M14x30	8	GB5783-86	
11	Cushion 14	8	GB93-87	
12	Bolt M12×40	6	GB5783-86	
13	Belt Pulley, Engine	1	W5.0-03A-05-02	
14	Cushion 8	16	GB93-87	
15	Air Intake Hose Assy	1	W2.5M-03F-05-08-00	
16	Air Filter, Dust Self-exhausting	1	W2.5M-03F-05-12-00A	
17	Bolt M8×20	7	GB5783-86	
18	Washer, Plain 8	16	GB97.1-85	
19	Throat Hoop, Steel, 60-80	1	Q67676	
20	Exhaust Pipe Weld	1	W3.5-09A-01-14-00	
21	Supporter, Engine, Internal	1	W2.5-03-05-04-00	
22	Muffler	1	W3.5-09A-01-10-00	
23	Hoop Weld	1	W2.0-03-05-13-00	
24	Bolt M10×50	1	GB5782-86	
25	Nut M10	2	GB6170-86	
26	Washer, Plain 10	18	GB97.1-85	
27	Cushion	1	WD.20-03	
28	Rod Weld, Limiter, Belt	1	W2.5DA-03H-05D-05-00	
29	Bolt M10X35	1	GB5783-86	
30	Bolt M8X16	3	GB5783-86	
31	Thermal Baffle, Air Intake Hose	1	W2.5DA-03EK-05-13	
32	Fixing Bracket, Fuel Hose	1	W2.5D-03-05-01	
33	Supporter, Engine, Front, Internal	1	W2.5DA-03A-05-01-00	
34	Bolt M10×35	2	GB5783-86	
35	Bolt M10×30	2	GB5783-86	

Engine Assy W3.5H-09F-01-00(Lower Exhaust)

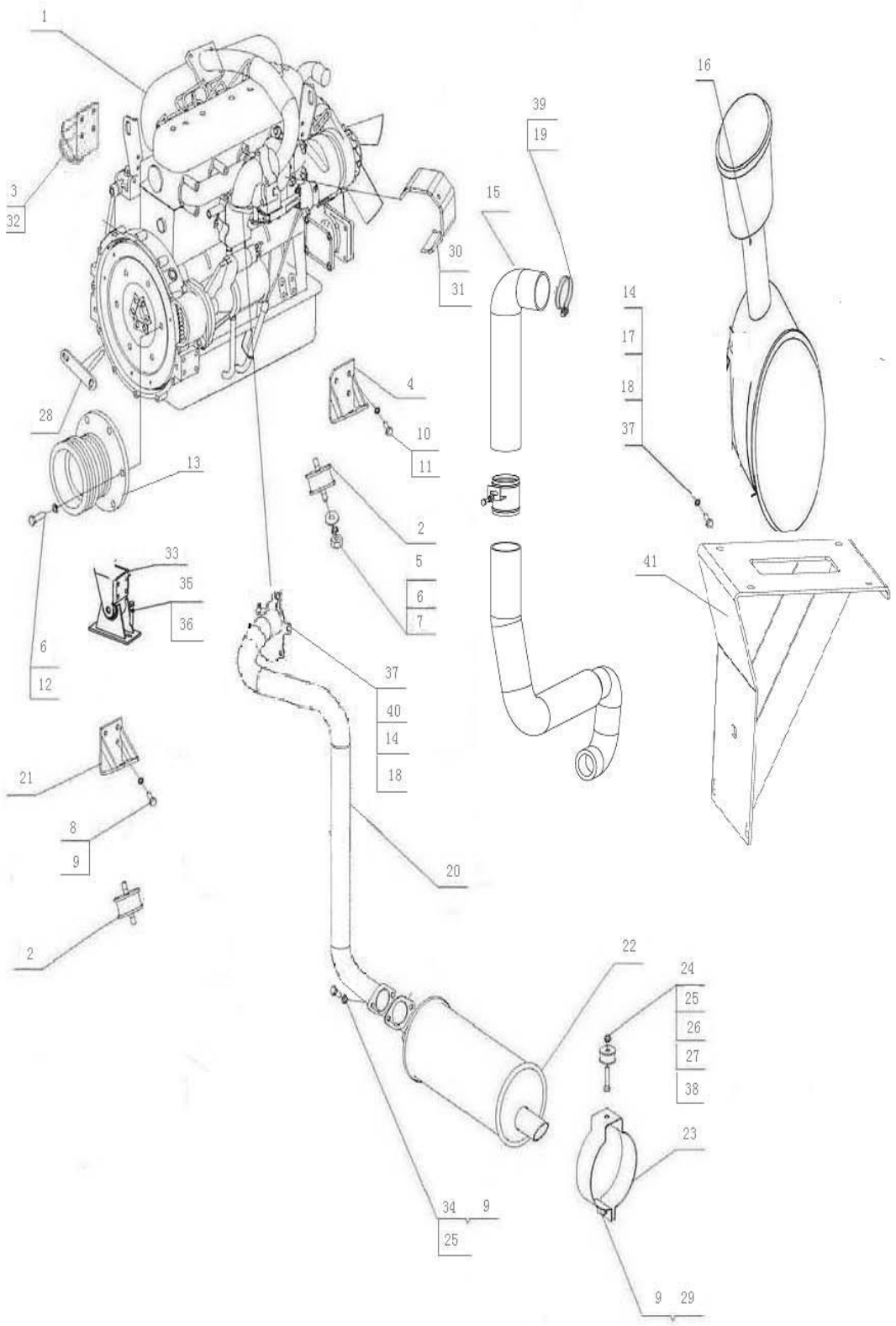

Engine Assy W3.5H-09F-01-00(Lower Exhaust)

NO.	Description	QTY	Part Code	Note
36	Washer, Big 10	4	GB96-85	
37	Nut M8	9	GB6170-86	
38	Steel Sleeve, Shock-absorbing	1	W2.5DA-03H-05-13	
39	Throat Hoop, Steel, 70-90	1	Q67676	
40	Gasket, Exhaust Hose	1	W2.5DA-03EK-05-15	
41	Plate Weld, Air Filter	1	W2.5M-03F-05-04-00	

Radiator Assy (Cabin)

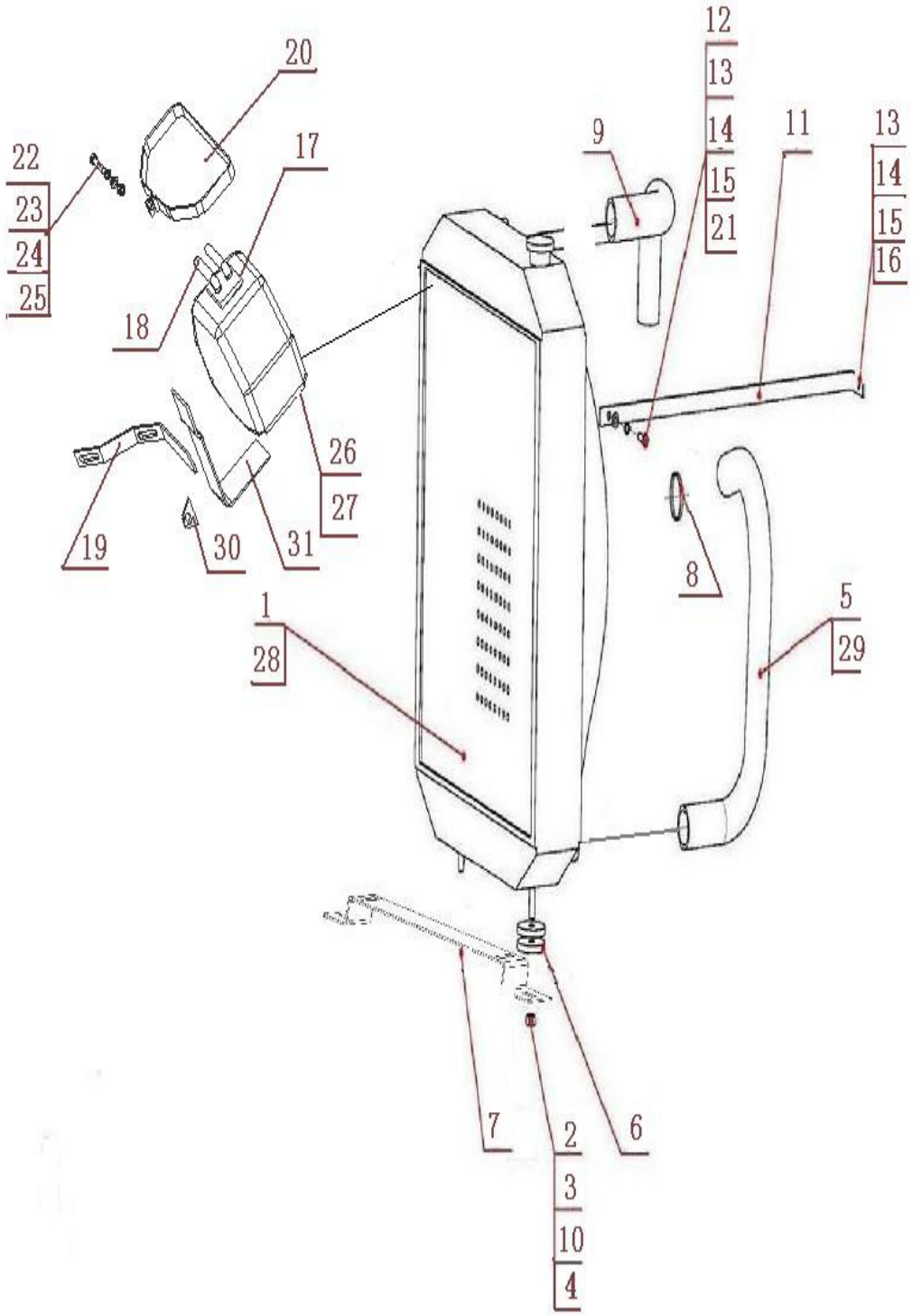

Radiator Assy (Cabin)				
NO.	**Description**	**QTY**	**Part Code**	**Note**
1	Radiator	1	W2.5M-03F-11-01-00	
2	Bolt M12X30	2	GB/T5783-86	
3	Washer, Plain 12	6	GB97.1-85	
4	Nut M12	6	GB/T6170-86	
5	Lower Water Pipe	1	W2.5M-03F-11-05	
6	Gasket, Water Tank	2	4LZ1.6.3C-06	
7	Seat Weld, Water Tank	1	W2.5E-03K-11-09-00	
8	Throat Hoop, Steel, 44-48	4		
9	Upper Water Pipe	1	W2.5E-03K-11-02	
10	Cushion 12	2	GB93-87	
11	Support Rod, Radiator	1	W2.5E-03-11-08	
12	Bolt M8X20	4	GB/T5783-86	
13	Washer, Plain 8	4	GB97.1-85	
14	Cushion 8	6	GB93-87	
15	Nut M8	4	GB/T6170-86	
16	Bolt M8X16	2	GB5783-86	
17	Auxiliary Water Tank	1	W2.0-03B-11-10	
18	Hoop 12	2	Q673B	
19	Support Rod Weld, Rear	1	W2.5M-03F-11-06-00	
20	Steel Flat Bar, Auxiliary Water Tank	1	W2.5M-03F-11-07	
21	Washer, Plain, Big 8	2	GB96-85	
22	Bolt M6X25	1	GB5783-86	
23	Washer, Plain 6	1	GB97.1-85	
24	Cushion 6	1	GB93-87	
25	Nut M6	1	GB/T6170-86	
26	Sponge Gasket Ⅰ	1	W2.5M-03F-11-08	
27	Sponge Gasket Ⅱ	1	W2.5M-03F-11-09	
28	Radiator	1	W2.5E-03K-11-01-00	
29	Lower Water Pipe	1	W2.5E-03K-11-05	
30	Connecting Seat	1	W2.5M-03F-11-06-03	
31	Bottom Seat	1	W2.5M-03F-11-06-02	

Fuel Tank Assy W2.5DA-03H-04-00SP

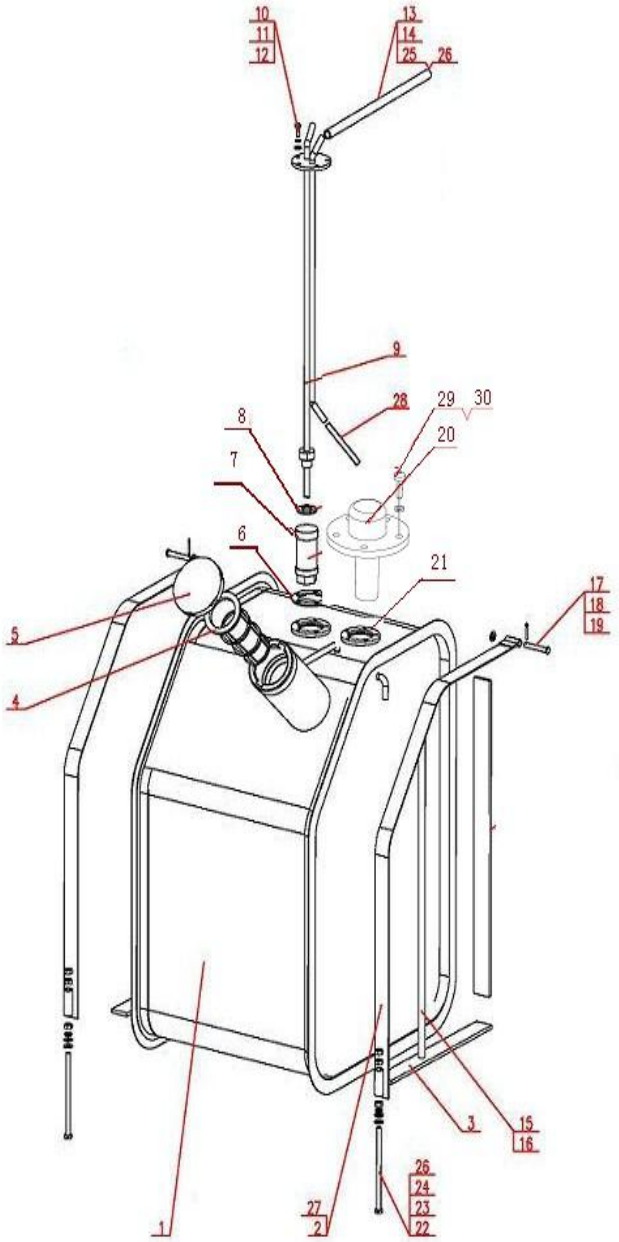

Fuel Tank Assy W2.5DA-03H-04-00SP

NO.	Description	QTY	Part Code	Note
1	Fuel Tank Weld	1	W2.5DA-03H-04-02-00SP	
2	Steel Flat Bar, Fuel Tank Fixing	2	W2.5DA-03H-04-05-00	
3	Sponge, Bottom	2	W2.5DA-03H-04-06	
4	Strainer	1	WD.4FE.8-02	
5	Cover Assy , Fuel Filling	1	W2.5DA-03H-04-01-00SP	
6	Plate	1	W2.0-03-04-06	
7	Strainer, Fuel Absorption	1	W2.0-03-04-08-03	
8	Washer 18	1	JB982-77	
9	Pipe Assy, Fuel Absorption	1	W2.5DA-03H-04-08-00	
10	Bolt M6X16	5	GB/T5783-86	
11	Gasket 6	5	GB/93-87	
12	Gasket 6	5	GB97.1-85	
13	Fuel Intake Hose	1	W2.5-03-04-03	
14	Throat Hoop Ø12~Ø20	7	HG	
15	Display Hose, Fuel Level	1	W2.5DA-03H-04-04	
16	Throat Hoop ØC9～ØC13	2	HG	
17	Pin Shaft B C8X50	2	GB882-86	
18	Pin 3.2×18	2	GB91-86	
19	Washer 8	2	GB97.1-85	
20	Fuel Level Sensor	1	W3.5H-09-02-01	
21	Rubber Cushion, Sensor	1	4LZ2A.19.1-03	
22	Nut M8	6	GB6170-86	
23	Bolt M8X120	2	GB5783-86	Sack Type
24	Gasket 8	4	GB97.1-85	
25	Sponge, Steel Flat Bar	2	W2.5DA-03H-04-07	
26	Gasket 8	2	GB93-87	
27	Fuel Outlet Hose	1	W2.5DA-03H-04-11	
28	Connecting Hose, Oil Returning	1	W2.5DA-03H-04-12	
29	Bolt M5×12	5	GB818-2000	
30	Gasket 5	5	GB93-87	

VIII Hydraulic Part

(Sack Type)

Hydraulic Valve Assy W2.5DD-05DX-00 (Sack Type)

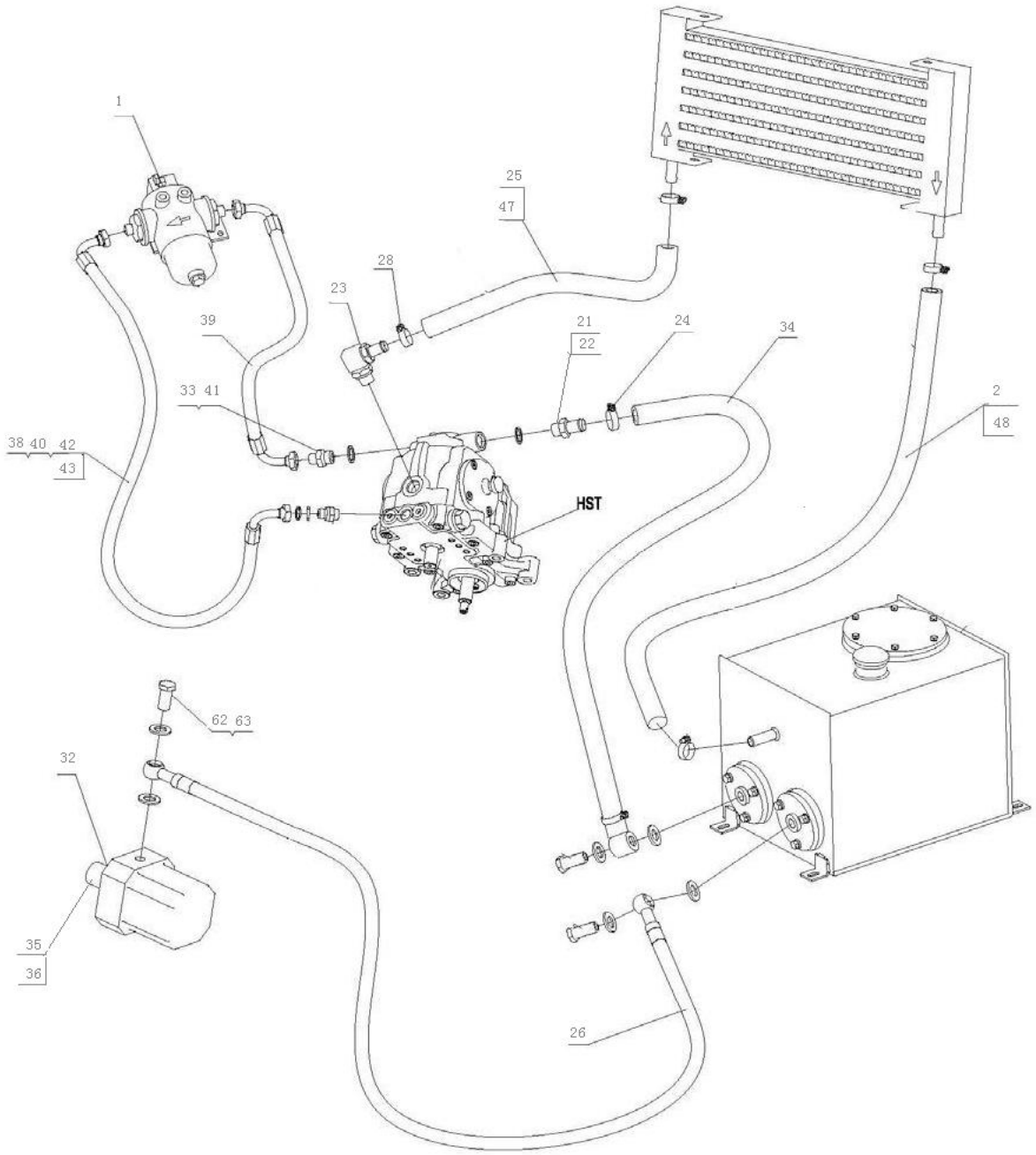

Hydraulic Valve Assy W2.5DD-05DX-00 (Sack Type)				
NO.	**Description**	**QTY**	**Part Code**	**Note**
1	Oil Filter Assy	1	W2.5DA-05D-13-00	
2	Oil Returning Hose, Oil Radiator	1	W2.0-05-02	88HP Engine
3	Hydraulic Oil Tank Assy	1	W2.5DD-05DX-01-00A	
4	Oil Returning Hose, Reel Valve	1	W2.5DD-05DB-02-00	
5	One-Way Valve Assy	1	W2.0-05-31-00	
6	Coupling Oil Pipe Assy	1	W2.5E-05GB-10-00	
7	Washer 18	35	JB982-77	
8	Bolt M18×1.5,Hollow	17	L1.8A-04-04	
9	Main Oil Pipe Assy , Reel	1	W2.5DD-05DB-04-00	
10	Multifunctional Slide Valve Assy	1	W2.5DD-05DC-02-00	
11	Main Oil Pipe, A, Header	1	W2.5DD-05DC-03-00	
12	Oil Distributing Pipe Assy , Right, Reel	1	W2.5DD-05D-02-00	
13	Oil Distributing Pipe Assy , Left, Reel	2	W2.5DD-05DB-06-00	
14	Oil Cylinder, Reel	2	W2.5F-05-10-00	
15	Oil Cylinder, Header	1	W2.5E-05-01-00	
16	T Connector	1	W2.5DD-05D-11	
17	Steering Oil Cylinder SL-JZXGB	1	W2.0-05-33	
18	Oil Pipe Assy , Left Steering	1	W2.5DD-05DB-07-00	
19	Oil Pipe Assy , Right Steering	1	W2.5DD-05DB-08-00	
20	Oil Returning Hose Assy , Steering	1	W2.5DD-05DB-09-00	
21	Washer 27	1	JB982-77	
22	Connector, Oil Inlet	1	WD.7M-02	
23	Connector, Oil Outlet	1	W2.0-05-30-00	
24	Oil Inlet Pipe Assy ,HST	1	W2.5DD-05DC-14-00	
25	Oil Inlet Pipe, Cooler	1	W2.0-05-17	88HP Engine
26	Oil Inlet Pipe Assy , Gear Pump	1	W2.5DD-05DC-12-00	
27	Oil Inlet Pipe Assy , Valve	1	W2.5DD-05DX-02-00	
28	Throat Hoop, Steel, 27	6		
29	Oil Distributing Pipe Assy , Left, Reel	1	W2.5DD-05D-07-00	
30	Connector, Reel Cylinder	2	W2.5DD-05D-08	
31	Connector, Oil Pipe, Steering Cylinder	3	W2.5DD-05D-09	

32	Gear Pump CBN-F312	1	W2.5DD-05DC-09-00A	Left rotation
33	Connector, Oil Outlet, Oil Filling Pump	1	W2.0-05(R)-34	
34	Throat Hoop, Steel, 32	1		
35	Bolt M8X30	2	GB70-85	YuchaiM8X50

Hydraulic Valve Assy W2.5DD-0.5DX-00(Sack Type)

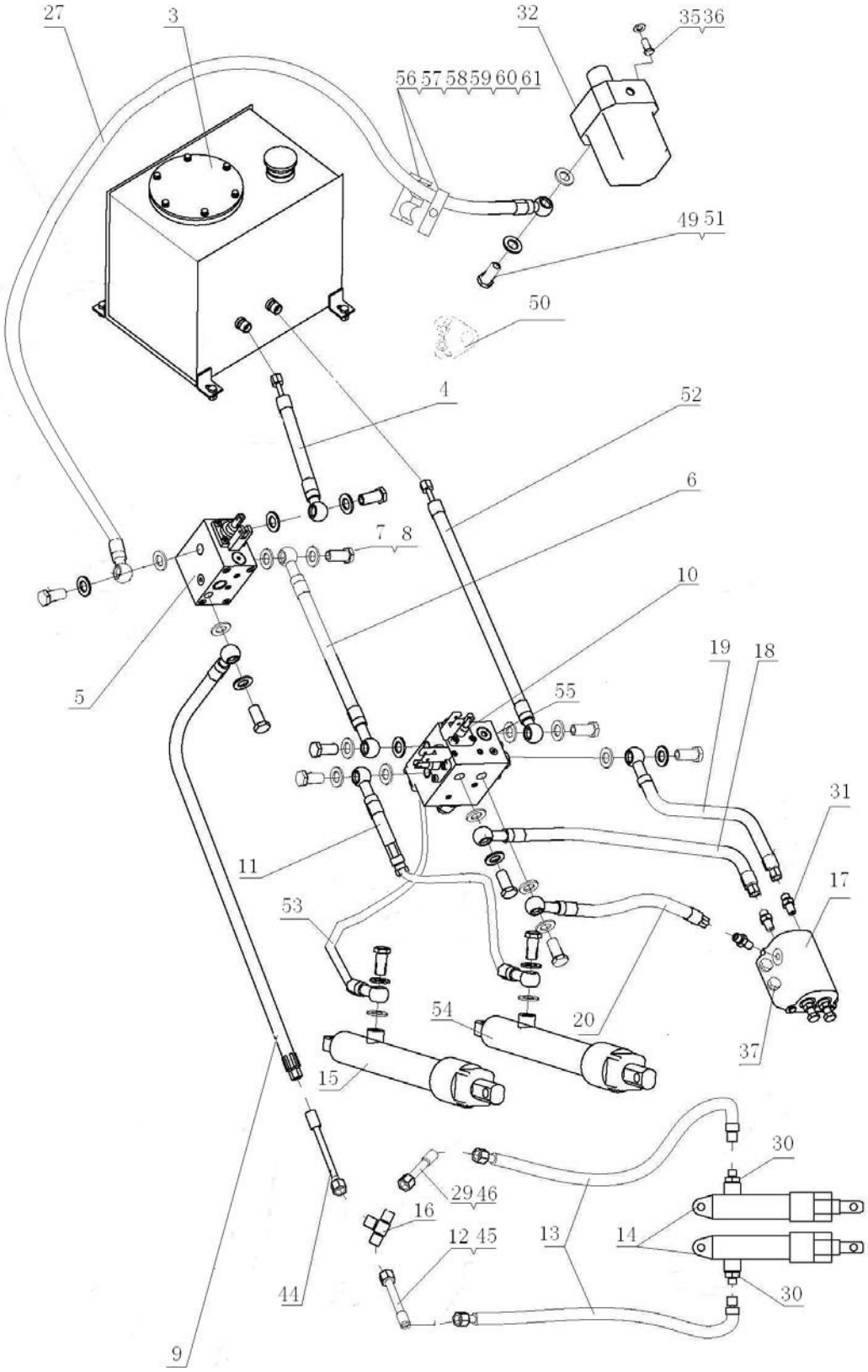

Hydraulic Valve Assy W2.5DD-0.5DX-00(Sack Type)				
NO.	**Description**	**QTY**	**Part Code**	**Note**
36	Washer 8	10	GB93-87	
37	Bolt M8X25	4	GB5783-86	Yuchai M8X45
38	Connector, HST	1	W2.0-05(R)-35	
39	Oil Pipe, Oil Filter, Oil Inlet Pump	1	W2.0-05(R)-36	
40	Oil Inlet Pipe, HST, Oil Filter	1	W2.5DA-05D-12	
41	Washer 21	1	JB982-77	
42	Washer 20	1	JB1002-77	
43	O Ring 14×2.65	1	GB3452.1-83	
44	Oil Pipe Assy , Header	1	W2.5DD-05D-10-00	
45	Oil Distributing Pipe Assy , Right, Reel	1	W2.5DD-05D-02-00A	Optional2.2M
46	Oil Distributing Pipe Assy , Left, Reel	1	W2.5DD-05D-07-00A	Optional2.2M
47	Oil Inlet Pipe, Cooler	1	W2.5DA-05D-15	
48	Oil Returning Pipe, Cooler	1	W2.5DA-05D-16	98HP Engine
49	Bolt, Hollow	1	W2.5D-05-02	
50	Anti-loose Plate Assy	1	W2.5D-05-20-00	
51	Washer 18	2	JB982-77	Gear Pump Oil Outlet
52	Oil Returning Pipe, Two-way Valve	1	W2.5DD-05DC-05-00	
53	Oil Pipe B, Header Cylinder	1	W2.5DD-05DC-04-00	
54	Header Cylinder	1	W2.5DD-05DB-30-00	
55	Connector	1	W2.5DD-05DB-33	
56	Press Plate	1	W2.0B-05CD-06	
57	Press Plate	2	W2.0B-05CD-07	
58	Bolt M8X70	1	GB5782-86	
59	Gasket 8	4	GB97.1-85	
60	Gasket 8	1	GB93-86	
61	Nut M8	1	GB6170-86	
62	Bolt M22X1.5, Hollow	3	W2.5DD-05DC-13	
63	Washer 22	6	JB982-77	

IX Hydraulic Part

(Canopy, Grain Tank Type)

Hydraulic System W2.5DD-05TC-00(40 Grain Unloading Cylinder)

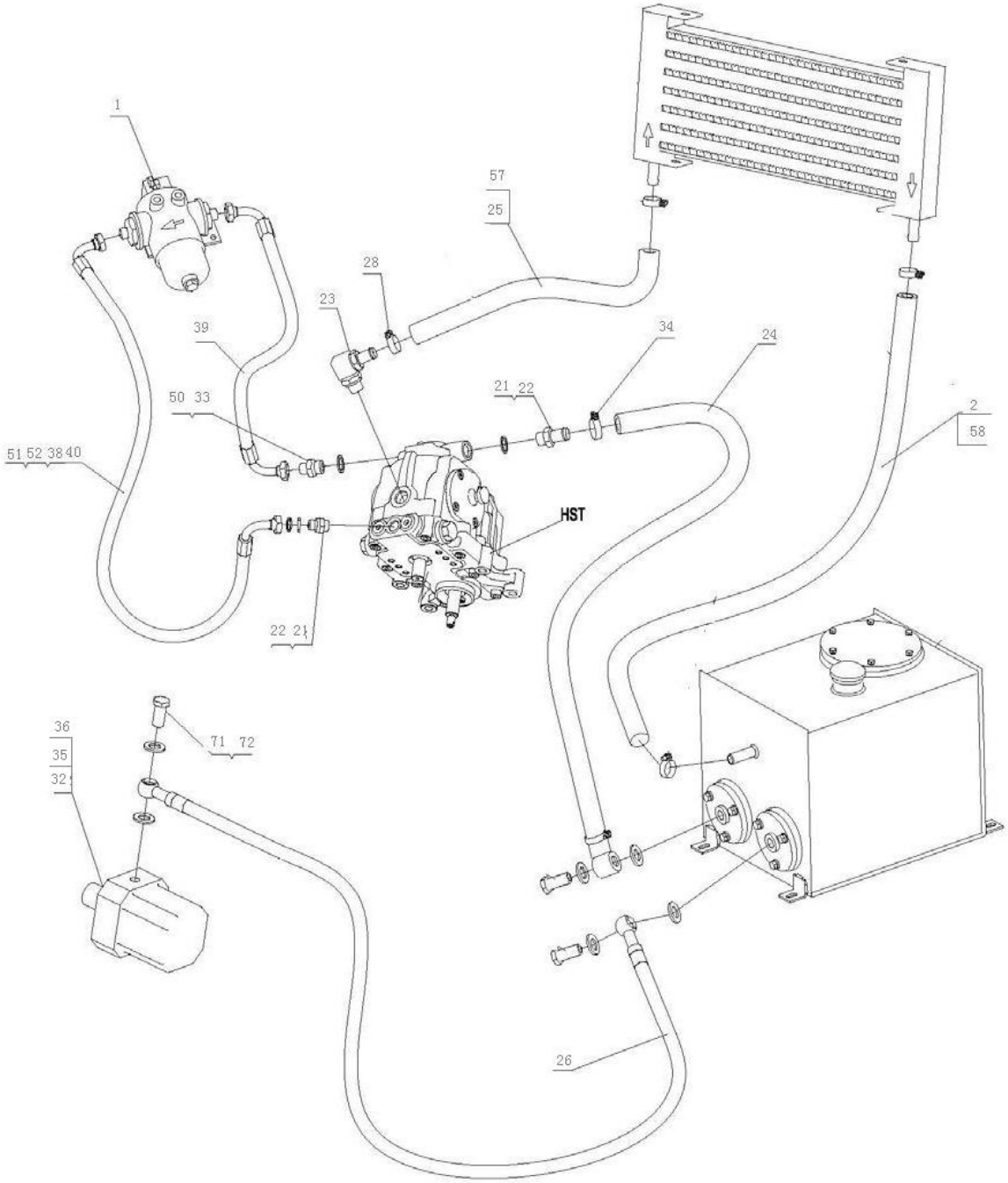

Hydraulic System W2.5DD-05TC-00(40 Grain Unloading Cylinder)

NO.	Description	QTY	Part Code	Note
1	Oil Filter Assy	1	W2.5DA-05D-13-00	
2	Oil Returning Hose, Oil Radiator	1	W2.0-05-02	
3	Hydraulic Oil Tank Assy	1	W2.5DD-05DB-01-00B	
4	Oil Returning Hose, Reel Valve	1	W2.5DD-05DB-02-00	
5	One-way Valve Assy	1	W2.0-05-31-00	
6	Coupling Oil Pipe Assy	1	W2.5E-05GB-10-00	
7	Washer 18	50	JB982-77	
8	Bolt M18×1.5, Hollow	24	L1.8A-04-04	
9	Main Oil Pipe Assy , Reel	1	W2.5DD-05DB-04-00	
10	Multifunctional Slide Valve Assy	1	W2.5DD-05DC-02-00	
11	Main Oil Pipe, A, Header	1	W2.5DD-05DC-03-00	
12	Oil Distributing Pipe Assy , Right, Reel	1	W2.5DD-05D-02-00	2.0m Header
13	Oil Distributing Pipe Assy ,Lifting, Reel	2	W2.5DD-05DB-06-00	
14	Oil Cylinder, Reel	2	W2.5F-05-10-00B	
15	Oil Cylinder, Header	1	W2.5E-05-01-00	
16	T Connector	1	W2.5DD-05D-11	
17	Oil Cylinder, Steering SL-JZXGB	1	W2.0-05-33	
18	Oil Pipe Assy , Left Steering	1	W2.5DD-05DB-07-00	
19	Oil Pipe Assy , Right Steering	1	W2.5DD-05DB-08-00	
20	Oil Returning Hose Assy , Steering	1	W2.5DD-05DB-09-00	
21	Washer 27	1	JB982-77	
22	Connector, Oil Inlet	1	WD.7M-02	
23	Connector, Oil Outlet	1	W2.0-05-30-00	
24	Oil Inlet Pipe Assy ,HST	1	W2.5DD-05DC-14-00	
25	Oil Inlet Pipe, Cooler	1	W2.0-05-17	
26	Oil Inlet Pipe Assy , Gear Pump	1	W2.5DD-05DC-12-00	
27	Oil Inlet Pipe Assy , Valve	1	W2.5DA-05D-03-00	
28	Throat Hoop, Steel, 27	8		
29	Oil Distributing Pipe Assy , Left, Reel	1	W2.5DD-05D-07-00	2.0m
30	Connector, Reel Cylinder	2	W2.5DD-05D-08	
31	Connector, Oil Pipe, Steering Cylinder	3	W2.5DD-05D-09	

32	Gear Pump CBN-F312	1	W2.5DD-05DC-09-00A	Left
33	Connector, Oil Outlet, Oil Filling Pump	1	W2.0-05(R)-34	
34	Throat Hoop, Steel, 32	1		
35	Bolt M8X30	2	GB70-85	Yuchai M8X50
36	Washer 8	10	GB93-87	
37	Bolt M8X25	4	GB5783-86	Yuchai M8X45
38	Connector, HST	1	W2.0-05(R)-35	
39	Oil Pipe, Oil Filter, Oil Inlet Pump	1	W2.0-05(R)-36	

Hydraulic System W2.5DD-05TC-00(40 Grain Unloading Cylinder)

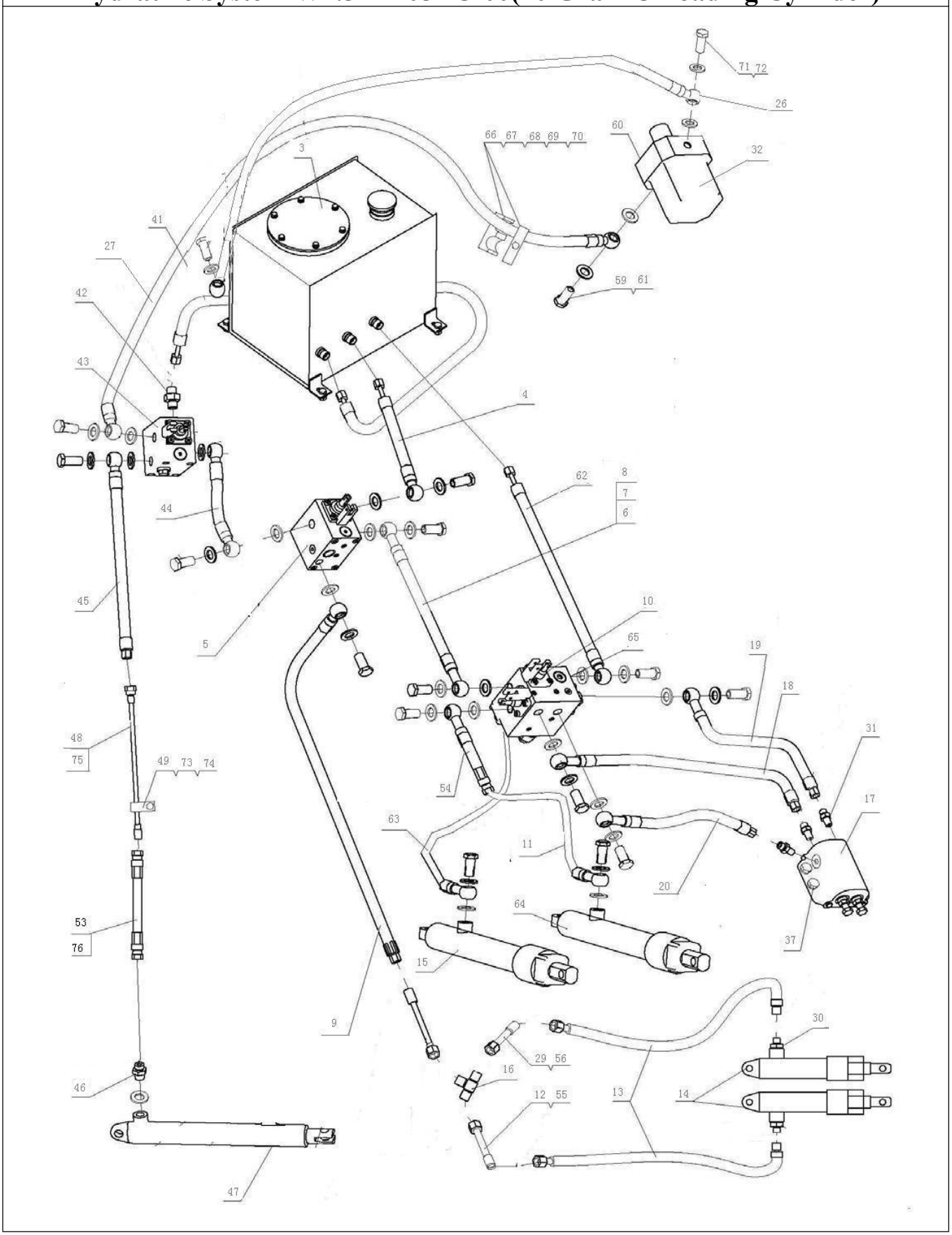

Hydraulic System W2.5DD-05TC-00(40 Grain Unloading Cylinder)

NO.	Description	QTY	Part Code	Note
40	Oil Inlet Hose, Oil Filter, HST	1	W2.5DA-05D-12	
41	Oil Returning Hose	1	W2.5DD-05DB-14	
42	Joint Seat Assy	1	W1.8C-05-09-01-00	
43	One-way Valve Assy , Grain Unloading	1	W2.5DD-05GX-01-00	
44	Coupling Oil Pipe Assy	1	W2.5DD-05DB-16-00	
45	Grain Unloading Hose, Front	1	W2.5DD-05DB-17-00A	
46	Connector, Unloading Cylinder	1	W2.0B-05-44A	
47	Unloading Cylinder	1	W2.5DD-05GX-02-00EA	
48	Unloading Pipe A	1	W2.5DD-05DC-07-00	
49	Single Pipe Clamp 8	4	W2.5DD-05GX-04	
50	Washer 21	1	JB982-77	
51	Washer 20	1	JB1002-77	
52	O Ring 14×2.65	1	GB3452.1-83	
53	Unloading Hose, Rear	1	W2.5DD-05GX-03-00	
54	Oil Hose Assy , Header	1	W2.5DD-05D-10-00	
55	Oil Distributing Pipe Assy , Right, Reel	1	W2.5DD-05D-02-00A	Optional2.2m
56	Oil Distributing Pipe Assy , Left, Reel	1	W2.5DD-05D-07-00A	Optional2.2m
57	Oil Inlet Pipe, Cooler	1	W2.5DA-05D-15	98Horsepower Only
58	Oil Returning Hose, Cooler	1	W2.5DA-05D-16	98 Horsepower Only
59	Bolt, Hollow	1	W2.5D-05-02	
60	Anti-loose Plate Assy	1	W2.5D-05-20-00	
61	Washer 18	2	JB982-77	
62	Oil Returning Pipe, Two-way Valve	1	W2.5DD-05DC-05-00	
63	Oil Pipe B, Header Cylinder	1	W2.5DD-05DC-04-00	
64	Header Cylinder	1	W2.5DD-05DB-30-00	
65	Connector	1	W2.5DD-05DB-33	
66	Press Plate	1	W2.0B-05CD-06	
67	Block	2	W2.0B-05CD-07	
68	Bolt M8X65	1	GB5782-86	
69	Gasket 8	4	GB97.1-85	
70	Nut M8	1	GB6170-86	
71	Bolt M22, Hollow	3	W2.5DD-05DC-13	
72	Washer 22	6	JB982-77	
73	Bolt M8X45	2	GB5783-86	
74	Washer 8	4	GB96-85	
75	Unloading Pipe A	1	W2.5DD-05DC-07-00A	For W3.5 Model
76	Unloading Hose	1	W2.5DD-05GX-03-00A	For W3.5 Model

X Hydraulic Part

(Cabin Type)

Hydraulic Valve Assy W2.5E-05GW-00 (Cabin Type)

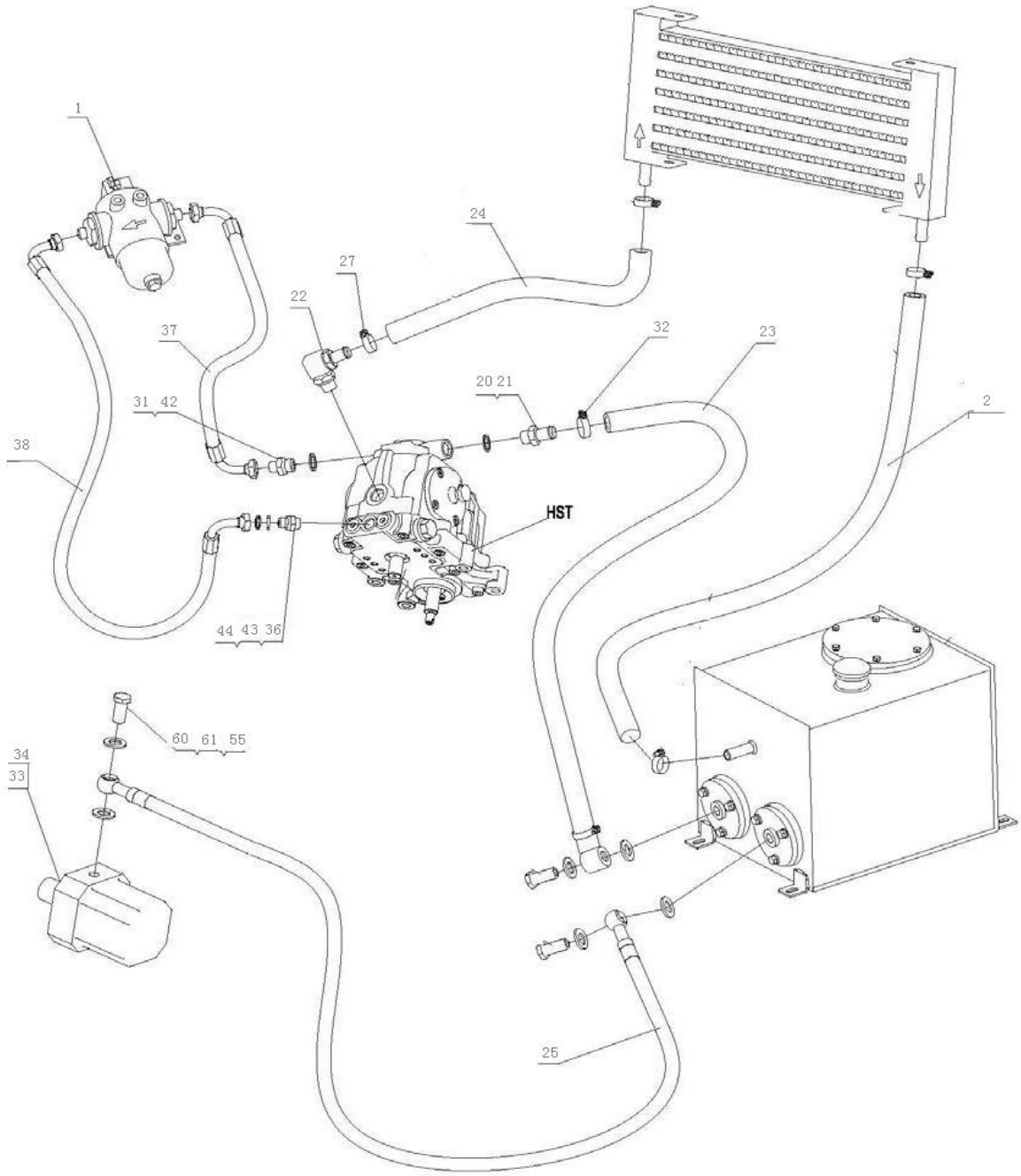

Hydraulic Valve Assy W2.5E-05GW-00 (Cabin Type)				
NO.	**Description**	**QTY**	**Part Code**	**Note**
1	Oil Filter Assy	1	W2.5DA-05D-13-00	
2	Oil Returning Hose, Oil Radiator	1	W2.5M-05M-03	
3	Hydraulic Oil Tank Assy	1	W2.5M-05M-01-00	
4	Oil Returning Hose Assy , Multifunctional Valve	1	W2.5M-05M-04-00	
5	Coupling Oil Pipe Assy	1	W2.5M-05M-05-00	
6	Washer 18	36	JB982-77	
7	Bolt M18×1.5, Hollow	16	L1.8A-04-04	
8	Main Oil Pipe Assy , Reel	1	W2.5M-05M-06-00	
9	Multifunctional Slide Valve Assy	1	W2.5DD-05DC-02-00	
10	Oil Pipe, B, Header Cylinder	1	W2.5M-05M-16-00	
11	Oil Pipe Assy ,Lifting, Reel	2	W2.5E-05GW-01-00	
12	Oil Cylinder, Reel	2	W2.5F-05-10-00B	
13	Header Cylinder	1	W2.5E-05-01-00	
14	Oil Pipe Assy , Header	1	W2.5DD-05D-10-00	
15	T Connector	1	W2.5DD-05D-11	
16	Steering Cylinder SL-JZXGB	1	W2.0-05-33	
17	Oil Pipe Assy , Left Steering	1	W2.5M-05M-07-00	
18	Oil Pipe Assy , Right Steering	1	W2.5M-05M-08-00	
19	Oil Returning Hose Assy , Steering	1	W2.5M-05M-09-00	
20	Washer 27	1	JB982-77	
21	Connector, Oil Inlet	1	WD.7M-02	
22	Connector, Oil Outlet	1	W2.0-05-30-00	
23	Oil Inlet Pipe Assy ,HST	1	W2.5M-05M-15-00	
24	Oil Inlet Pipe, Cooler	1	W2.0-05-17	
25	Oil Inlet Pipe Assy , Gear Pump	1	W2.5DD-05DC-12-00	
26	Oil Inlet Pipe Assy , Valve	1	W2.5M-05M-10-00	
27	Throat Hoop, Steel, 27	6		
28	Connector, Reel Cylinder	2	W2.5DD-05D-08	
29	Connector, Oil Pipe, Steering Cylinder	3	W2.5DD-05D-09	
30	Gear Pump CBN-F312	1	W2.5DD-05DC-09-00A	
31	Connector, Oil Outlet, Oil Filling Pump	1	W2.0-05(R)-34	
32	Throat Hoop, Steel, 32	1		

33	Bolt M8X30	1	GB70-85	
34	Washer 8	9	GB93-87	
35	Bolt M8X25	8	GB5783-86	
36	Connector, HST	1	W2.0-05(R)-35	
37	Oil Pipe, Oil Filter, Oil Inlet Pump	1	W2.5M-05M-11-00	
38	Oil Inlet Hose, Oil Filter, HST	1	W2.5M-05M-12-00	

Hydraulic Valve Assy W2.5E-05GW-00 (Cabin Type)

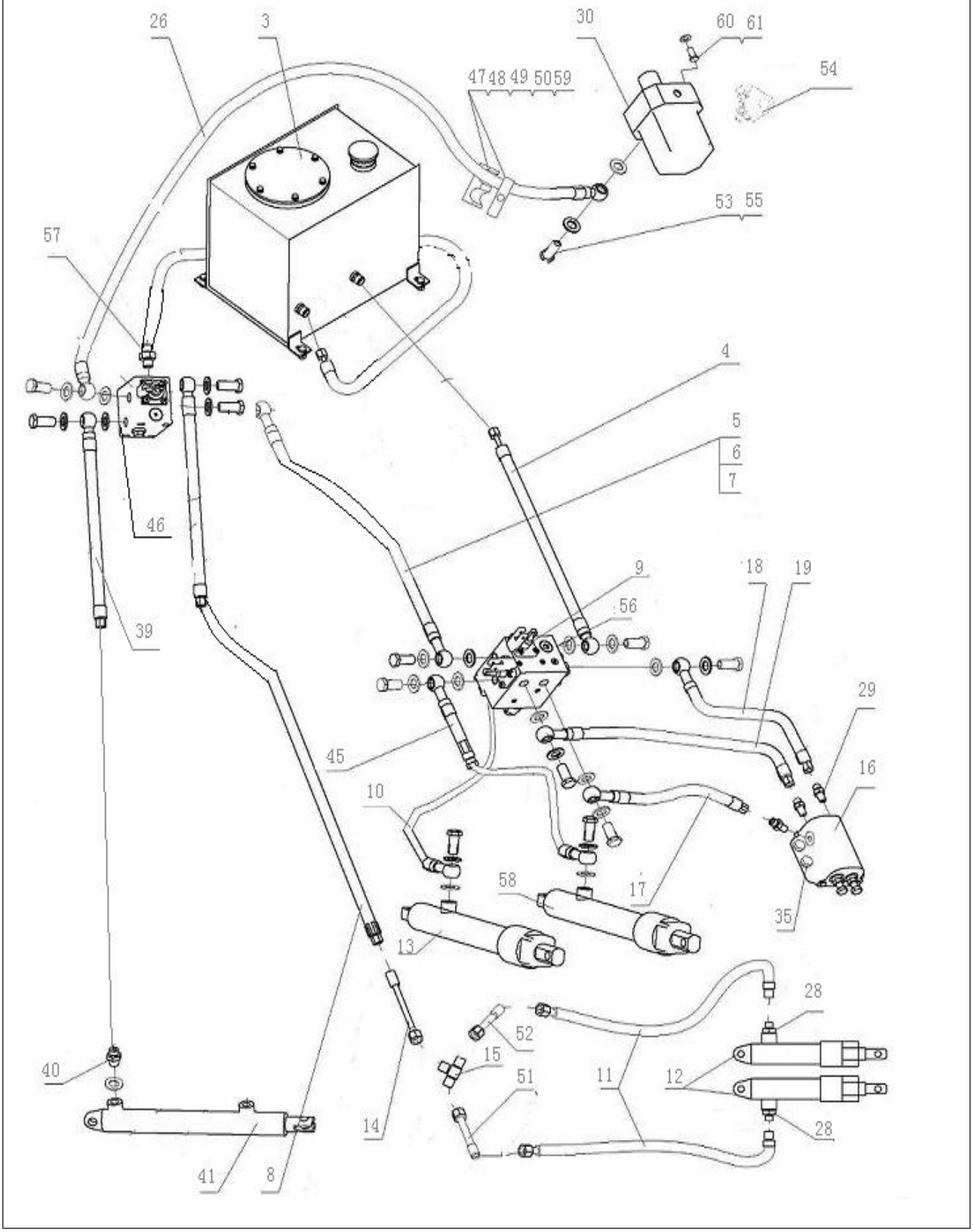

Hydraulic Valve Assy W2.5E-05GW-00 (Cabin Type)				
NO.	**Description**	**QTY**	**Part Code**	**Note**
39	Grain Unloading Hose	1	W2.5E-05GW-13-00	
40	Connector, Unloading Cylinder	1	W2.0B-05-44A	
41	Unloading Cylinder	1	W2.5DD-05GX-02-00EA	
42	Washer 21	1	JB982-77	
43	Washer 20	1	JB1002-77	
44	O Ring 14×2.65	1	GB3452.1-83	
45	Oil Pipe, A, Header Cylinder	1	W2.5M-05M-17-00	
46	Solenoid Valve Assy	1	W2.5M-05M-02-00	
47	Press Plate	1	W2.0B-05CD-06	
48	Block	2	W2.0B-05CD-07	
49	Bolt M8X65	1	GB5782-86	
50	Gasket 8	4	GB97.1-85	
51	Oil Distributing Pipe Assy , Right, Reel	1	W2.5DD-05D-02-00A	
52	Oil Distributing Pipe Assy , Left, Reel	1	W2.5DD-05D-07-00A	
53	Bolt, Hollow	1	W2.5D-05-02	
54	Anti-loose Plate Assy	1	W2.5D-05-20-00	
55	Washer 18	2	JB982-77	
56	Connector	1	W2.5DD-05DB-33	
57	Oil Returning Hose Assy , Solenoid Valve	1	W2.5M-05M-14-00	
58	Header Cylinder	1	W2.5DD-05DB-30-00	
59	Nut M8	1	GB6170-86	
60	Washer 22	6	JB982-77	
61	Bolt M22, Hollow	3	W2.5DD-05DC-13	

XI Operation Part

(Canopy Type)

Operation Assy

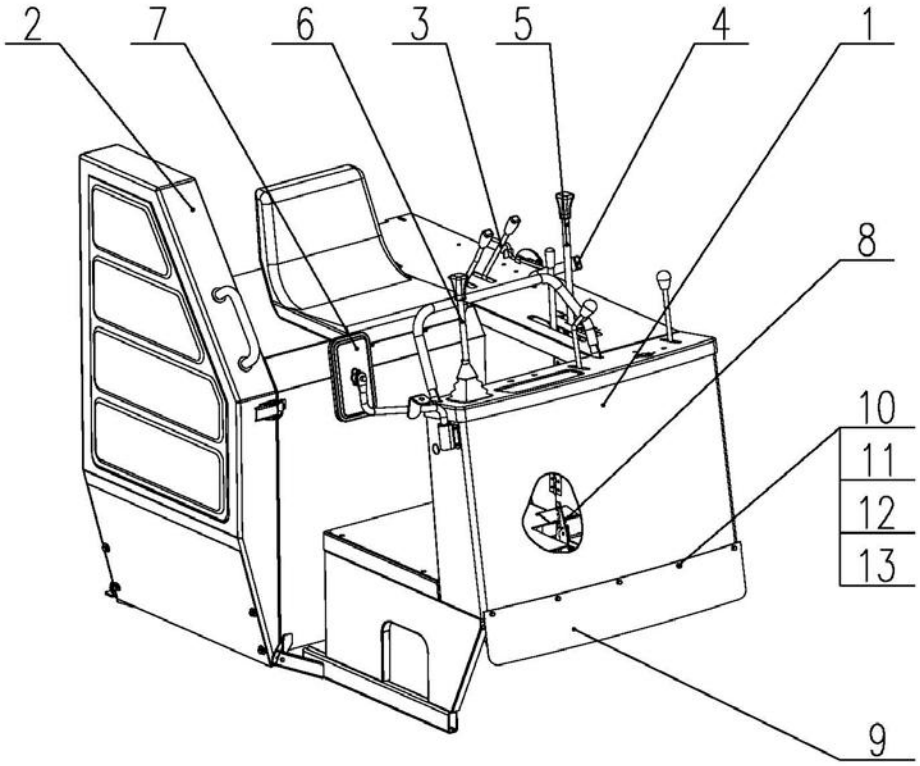

Operation Assy

NO.	Description	QTY	Part Code	Note
1	Operation Platform Assy	1	W3.5H-07X-01-00	
2	Cover, Dust Proof, Engine	1	W3.5H-07X-06-00	
3	Clutch Lever	1	W2.5DA-07E-05-00	
4	Throttle	1	W2.5DA-07E-08-00	
5	Main and Auxiliary Shift	1	W3.5H-07D-04-00	
6	Main/Auxiliary Guide lever Assy	1	W2.5DA-07-02-00	
7	Side Mirror	1	W2.0-01-11-00	
8	Brake Lock	1	W2.5-07D-03-00	
9	Baffle Plate	1	W2.5DA-07E-11	
10	Bolt M6×16	5	GB5783-2000	
11	Washer 6	5	GB93-2000	
12	Washer 6	5	GB96-2000	
13	Nut M6	5	GB6170-2000	

Operation Platform Assy

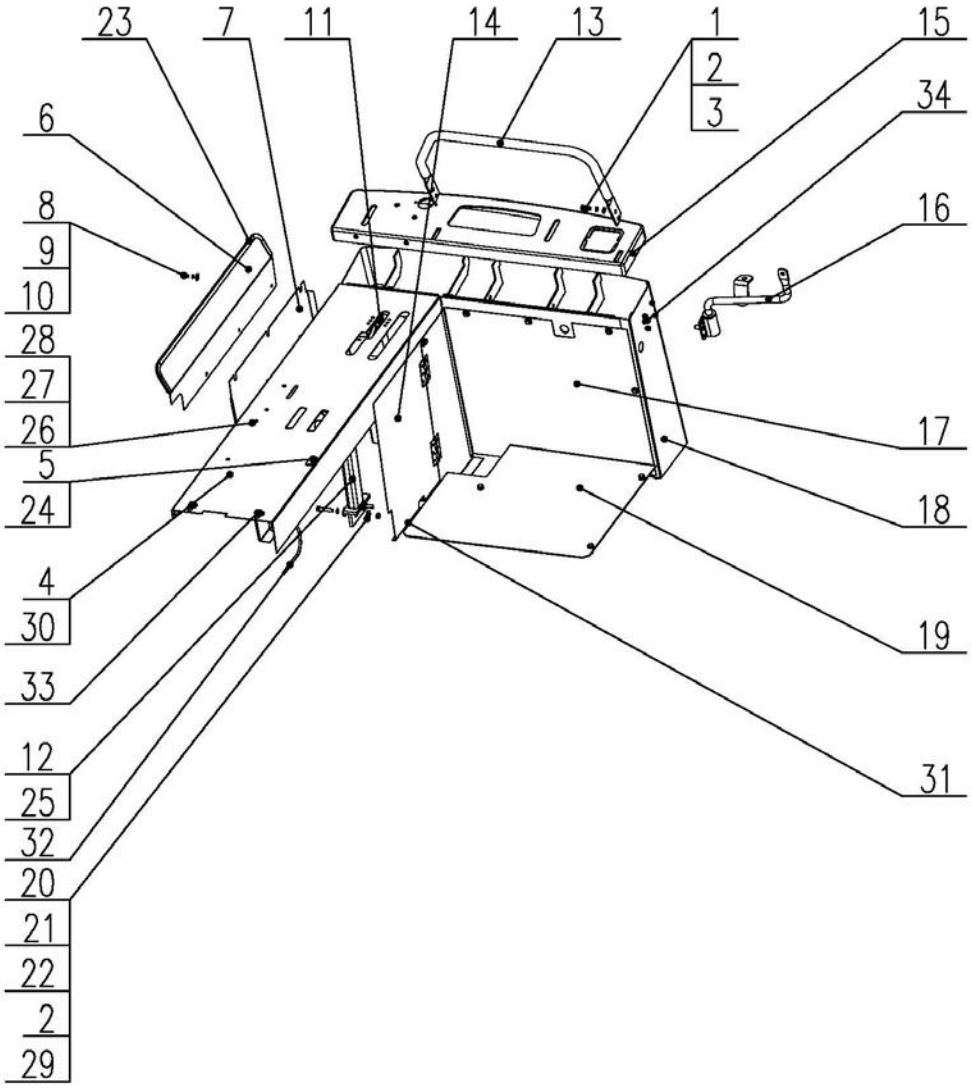

Operation Platform Assy

NO.	Description	QTY	Part Code	Note
1	Bolt M8x20	19	GB/T5783-2000	
2	Washer 8	29	GB/T93-87	
3	Washer 8	11	GB/T97.1-2002	
4	Operation Panel Weld	1	W2.5DA-07D-01-02-00	
5	Hook	1	W2.5DA-07G-01-20	
6	Plate	1	W2.5D-07G-01-18	
7	Cover Assy, Outside	1	W2.5D-07G-01-05-00	
8	Bolt M6x16	16	GB/T5783-2000	
9	Washer 6	17	GB/T93-87	
10	Washer 6	11	GB/T96-2002	
11	Spring Plate	1	W2.5DA-07KC-01-14	
12	Frame Weld, Speed Changing	1	W3.5H-07D-01-06-00	
13	Armrest	1	W2.5D-07-01-08	
14	Side Plate Weld, Operation Platform	1	W2.5D-07-01-14-00	
15	Panel	1	W2.5DA-07E-01-17	
16	Frame Assy, Reflector	1	W2.5D-07-01-16-00	
17	Plate Weld	1	W2.5D-07-01-11-00	
18	Operation Box Weld, Main	1	W2.5DA-07K-01-09A-00	
19	Pedal Assy	1	W2.5D-07-01-12	
20	Washer 8	20	GB/T96-2002	
21	Bolt M8X30	2	GB5783-86	
22	Nut M8	14	GB6170-86	
23	Buckle	1	W2.5D-07-01-19	
24	Plate, Reinforced	1	W2.5DA-07G-01-23	
26	Bolt M6x20	2	GB/T5783-2000	
27	Washer 6	2	GB/T97.1-2002	
28	Nut M6	6	GB6170-86	
29	Bolt M8X25	6	GB/T5783-2000	
30	Frame Assy, Support	1	W2.5D-07Y-01-01-00	
31	Sealing	on demand	W2.0-02-47	
32	Pipe	on demand	W2.5DA-07K-01-25	
33	Retaining Ring	2	W2.0-02-17-03	
34	Light Holder, Front	1	W2.0-07-01-21	

Engine Shield Assy

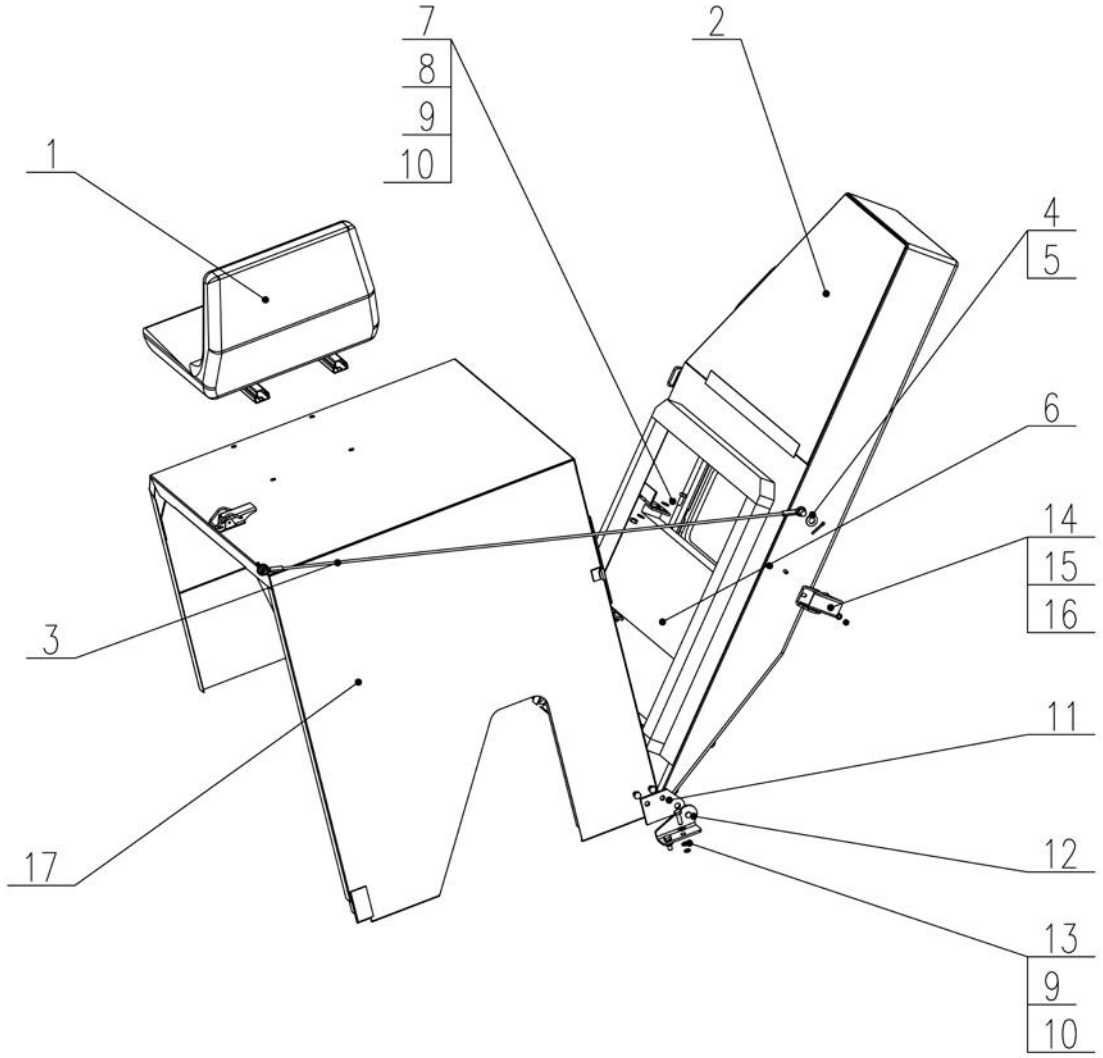

Engine Shield Assy

NO.	Description	QTY	Part Code	Note
1	Seat	1	W2.0-07-06-01-00A	
2	Shield Assy, Water Tank	1	W2.5DA-07(B)-06-03-00	
3	Rope, Steel	1	W2.5-07-06-05	
4	Pin 4×22	2	GB91-88	
5	Washer 12	2	GB97.1-85	
6	Cooler, Oil	1	W2.5DD-05DC-20-00	
7	Bolt M8×20	6	GB5783-86	
8	Nut M8	4	GB6170-86	
9	Washer 8	8	GB97.1-85	
10	Washer 8	8	GB93-87	
11	Connecting Plate, Seat, Lower	1	W2.5-07-06-06	
12	Block (Holder, Dust Proof)	1	W2.5-07-06-07-00	
13	Bolt M8×25	2	GB6170-86	
14	Fixing Clamp	3	W2.5-07-06-09-00A	
15	Nut M6	6	GB6170-86	
16	Washer 6	6	GB93-87	
17	Seat Frame Assy	1	W2.5D-07CE-06-04-00	

XII Operation Part

(Canopy, Auto Unloading Type)

Operation Assy

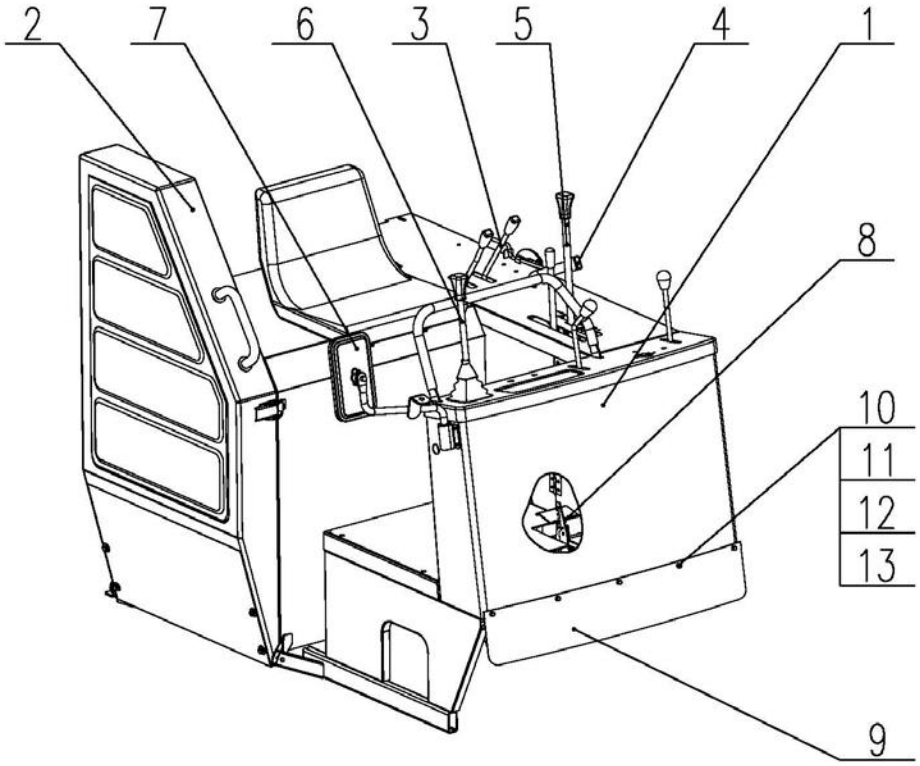

Operation Assy

NO.	Description	QTY	Part Code	Note
1	Operation Platform Assy	1	W3.5H-07D-01-00	
2	Cover, Dust Proof, Engine	1	W3.5H-07D-06-00	
3	Clutch Lever	1	W2.5DA-07E-05-00	
4	Throttle	1	W2.5DA-07E-08-00	
5	Main and Auxiliary Shift	1	W3.5H-07D-04-00	
6	Main/Auxiliary Guide lever Assy	1	W2.5DA-07-02-00	
7	Side Mirror	1	W2.0-01-11-00	
8	Brake Lock	1	W2.5-07D-03-00	
9	Baffle	1	W2.5DA-07E-11	
10	Bolt M6×16	5	GB5783-2000	
11	Washer 6	5	GB93-2000	
12	Washer 6	5	GB96-2000	
13	Nut M6	5	GB6170-2000	

Operation Platform Assy

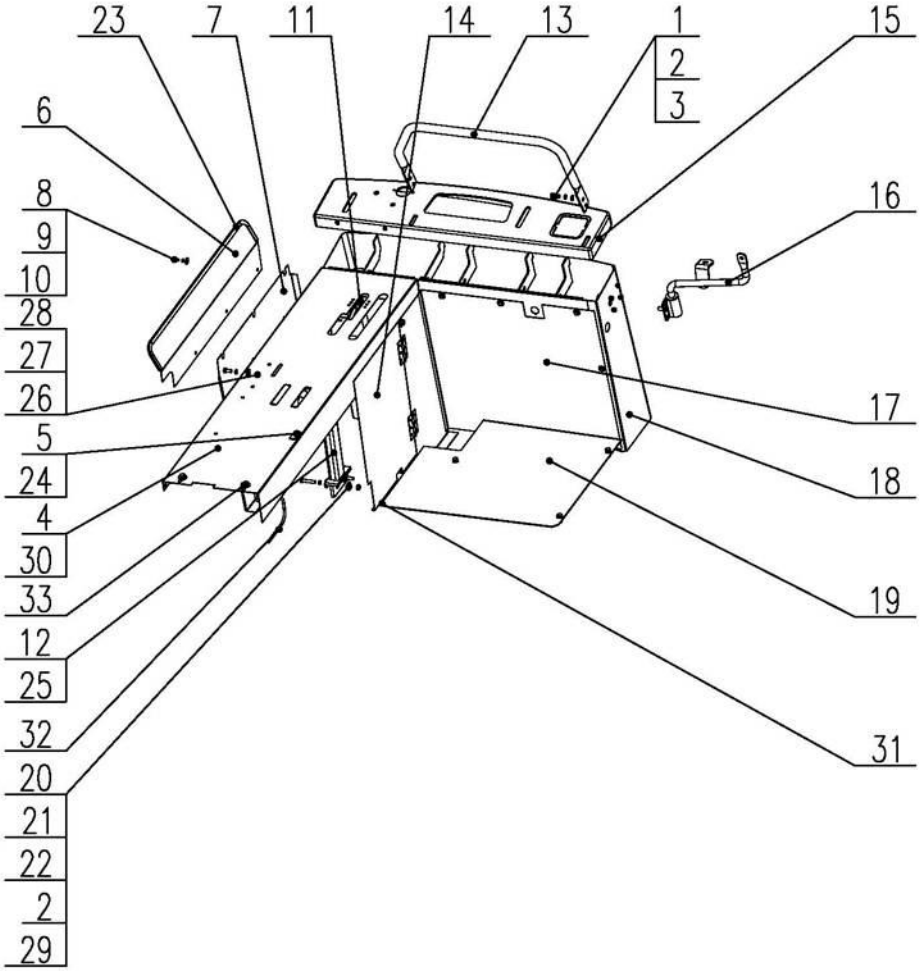

Operation Platform Assy

NO.	Description	QTY	Part Code	Note
1	Bolt M8x20	19	GB/T5783-2000	
2	Washer 8	29	GB/T93-87	
3	Washer 8	11	GB/T97.1-2002	
4	Operation Panel Weld	1	W2.5DA-07KC-01-02-00	
5	Hook	1	W2.5DA-07G-01-20	
6	Plate	1	W2.5D-07G-01-18	
7	Cover Assy, Outside	1	W2.5D-07G-01-05-00	
8	Bolt M6x16	16	GB/T5783-2000	
9	Washer 6	17	GB/T93-87	
10	Washer 6	11	GB/T96-2002	
11	Spring Plate	1	W2.5DA-07KC-01-14	
12	Frame Weld, Speed Changing	1	W3.5H-07D-01-06-00	
13	Armrest	1	W2.5D-07-01-08	
14	Side Plate Weld, Operation Platform	1	W2.5D-07-01-14-00	
15	Panel	1	W2.5DA-07E-01-17	
16	Frame Assy, Reflector	1	W2.5D-07-01-16-00	
17	Plate Weld	1	W2.5D-07-01-11-00	
18	Operation Box Weld, Main	1	W2.5DA-07K-01-09A-00	
19	Pedal Assy	1	W2.5D-07-01-12-00	
20	Washer 8	20	GB/T96-2002	
21	Bolt M8X30	2	GB5783-86	
22	Nut M8	14	GB6170-86	
23	Buckle	1	W2.5D-07-01-19	
24	Plate, Reinforced	1	W2.5DA-07G-01-23	
26	Bolt M6x20	2	GB/T5783-2000	
27	Washer 6	2	GB/T97.1-2002	
28	Nut M6	6	GB6170-86	
29	Bolt M8X25	6	GB/T5783-2000	
30	Operation Panel Weld	1	W2.5DA-07KC-01-02C-00	
31	Sealing	on demand	W2.0-02-47	
32	Pipe	on demand	W2.5DA-07K-01-25	
33	Washer	2	W2.0-02-17-03	

Main/Auxiliary Shift Handle W3.5H-07D-04-00

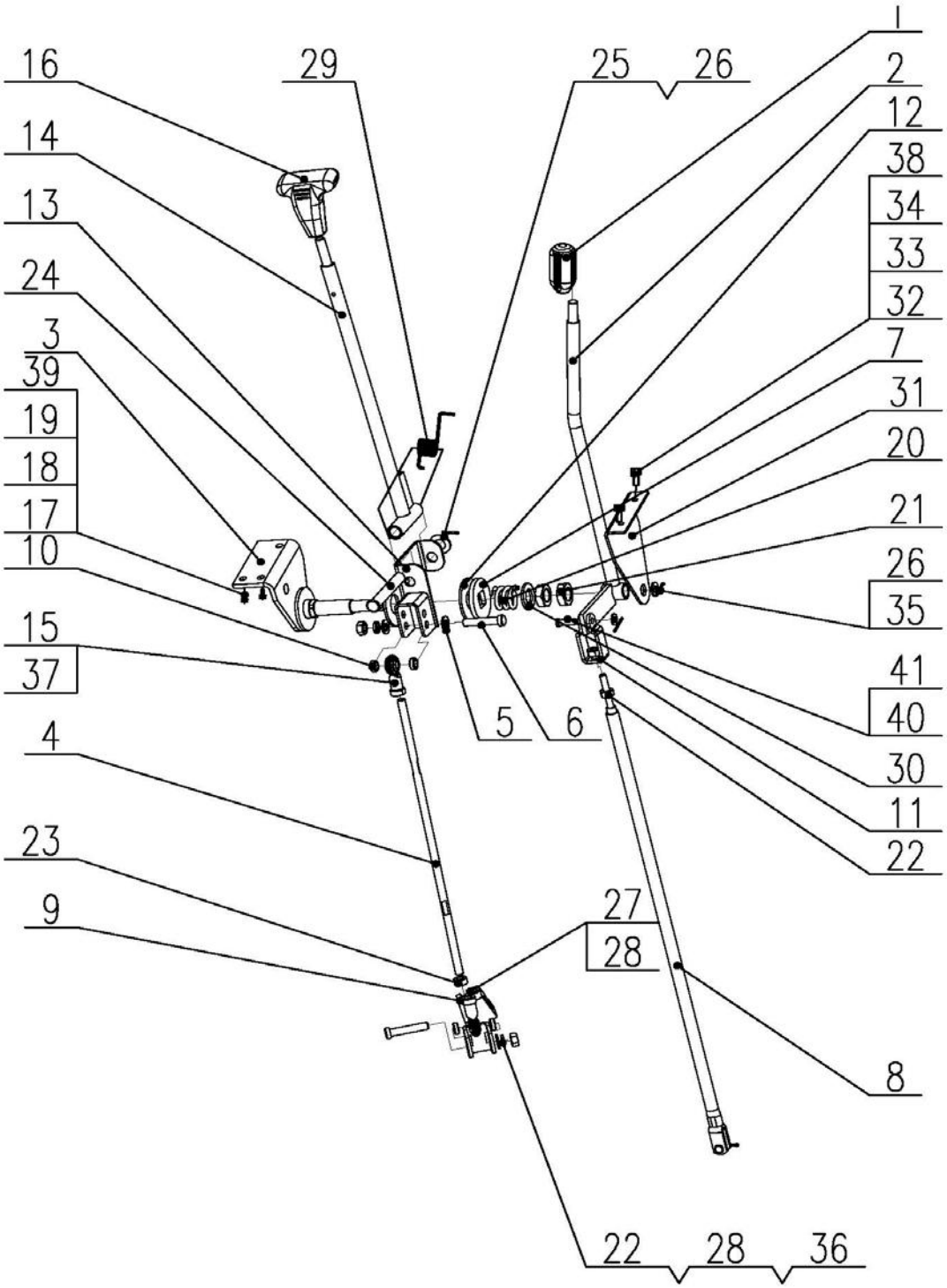

Main/Auxiliary Shift Handle W3.5H-07D-04-00

NO.	Description	QTY	Part Code	Note
1	Lever, Clutch	1	W2.5DA-07E-05-01	
2	Lever, Auxiliary Shift	1	W2.5DA-07E-04-02-00	
3	Frame	1	W2.5DA-07KC-04-03-00	
4	Connecting Rod, HST	1	W1.8-07S-04-04	
5	Washer, Plain 10	1	GB97.1-85	
6	Fixing Shaft, Lower	2	W2.5DA-07E-04-06	
7	Press Plate	1	W2.0-07-04A-23	
8	Connecting Rod, Speed Changing	1	W3.5H-07D-04-07-00	
9	Lever, Speed Changing	1	W2.5DA-07E-04-08-00	
10	Sleeve	4	W2.5DA-07E-04-10	
11	Connecting Fork	1	W2.5D-07-04-09-00	
12	Washer, Plain	2	W2.0-07-04A-24	
13	Translation Frame Weld	1	W2.5DA-07KC-04-14-00	
14	Translation Level	1	W2.5DA-07E-04-15-00	
15	Bearing PHSA10	1	W2.5DA-07E-04-21L	
16	Handle, Main Shift	1	W2.5DA-07E-04-19	
17	Bolt M8×25	3	GB5783-86	
18	Cushion 8	3	GB93-87	
19	Washer, Plain 8	5	GB97.1-85	
20	Spring	1	W2.0-07-04A-25	
21	Nut M20×1.5	2	GB6173-86	
22	Nut M10	4	GB6170-86	
23	Nut M10(Left)	1	GB6170-86	
24	Pin Shaft B14×100	1	GB882-86	
25	Washer, Plain 14	1	GB97.1-86	
26	Pin 3.2×30	2	GB91-86	
27	Bolt M10×35	1	GB5783-86	
28	Cushion 10	3	GB93-87	
29	Spring	1	W2.5DA-07KC-04-20	
30	Washer 20	1	GB97.1-85	
31	Holder	1	W2.5DA-07E-04-26	
32	Bolt M6×18	2	GB5783-86	
33	Washer 6	2	GB97.1-85	
34	Washer 6	2	GB93-85	
35	Washer 16	2	GB97.1-85	
36	Washer, Plain 10	2	GB97.1-85	
37	Bearing PHSA10	1	W2.5DA-07E-04-21R	
38	Nut M6	2	GB/T5783	
39	Nut M8	3	GB/T5783	

Main/Auxiliary Shift Handle W3.5H-07D-04-00

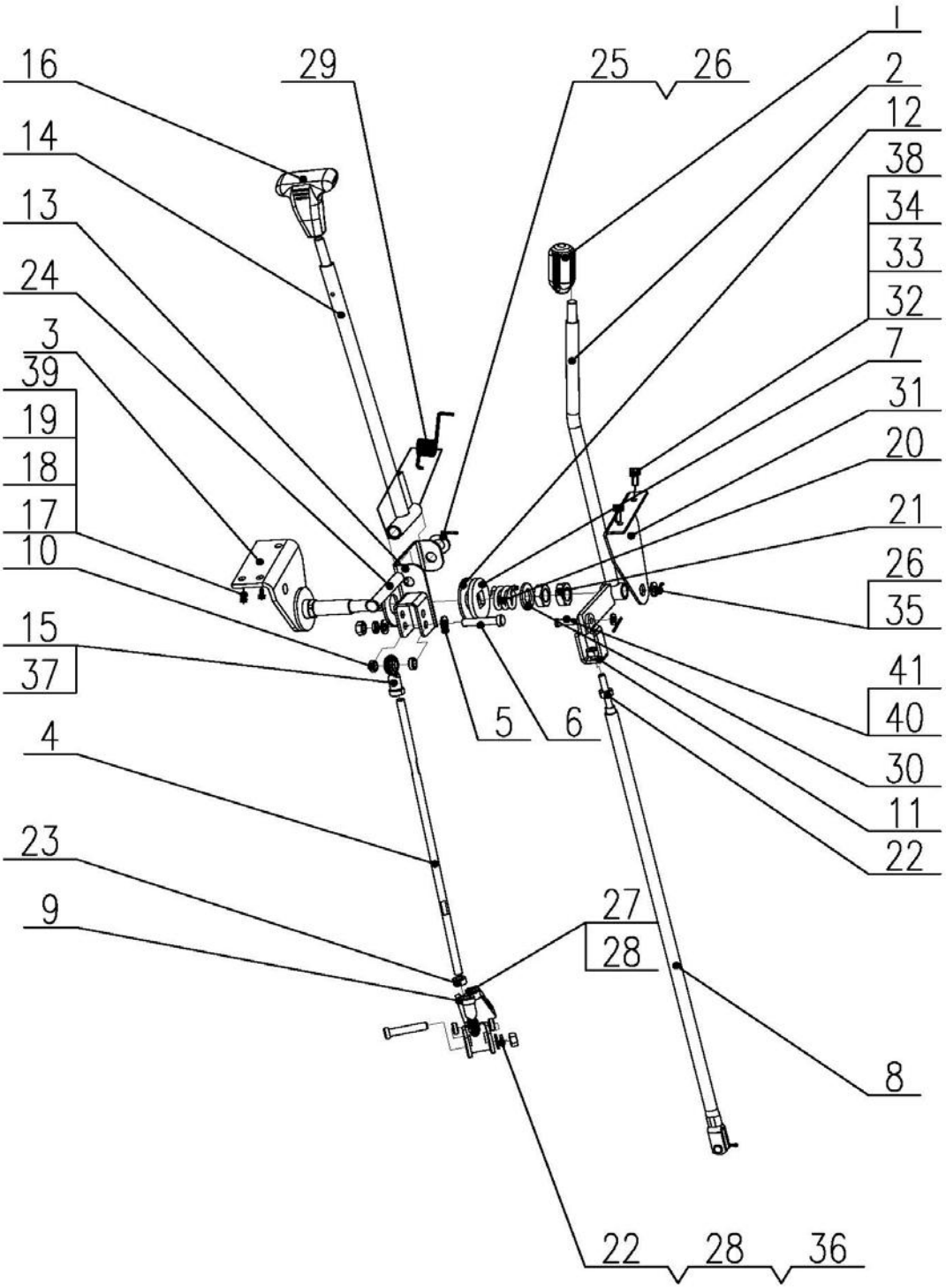

Main/Auxiliary Shift Handle W3.5H-07D-04-00

NO.	Description	QTY	Part Code	Note
40	Pin Shaft B8×26	2	GB/T882	
41	Pin 2.5×25	2	GB/T91	

Engine Shield Assy W3.5H-07D-06-00

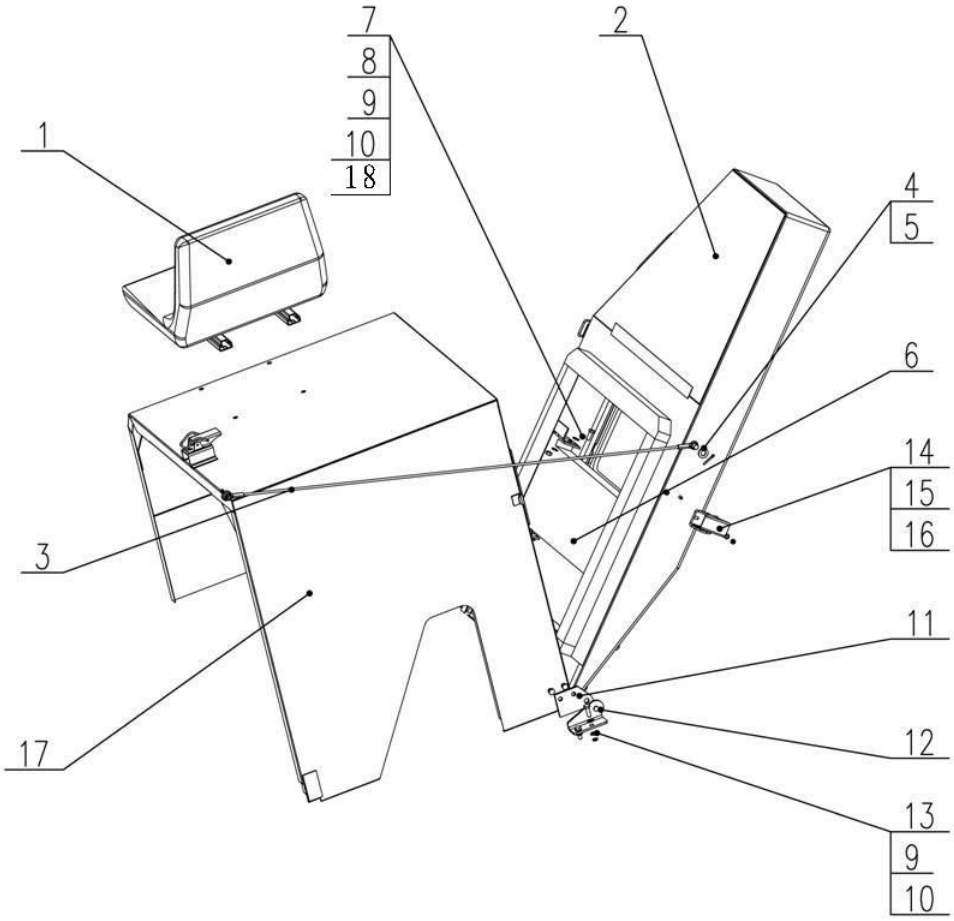

Engine Shield Assy W3.5H-07D-06-00

NO.	Description	QTY	Part Code	Note
1	Seat	1	W2.0-07-06-01-00A	
2	Shield Assy, Water Tank	1	W2.5DA-07GC-06-03-00	
3	Rope, Steel	1	W2.5-07-06-05	
4	Pin 4×22	2	GB91-88	
5	Washer 12	2	GB97.1-85	
6	Cooler, Oil	1	W2.5DD-05DC-20-00	
7	Bolt M8×20	6	GB5783-86	
8	Nut M8	4	GB6170-86	
9	Washer 8	8	GB97.1-85	
10	Washer 8	8	GB93-87	
11	Connecting Plate, Seat, Lower	1	W2.5-07-06-06	
12	Block(Holder, Dust Proof)	1	W2.5-07-06-07-00	
13	Bolt M8×25	2	GB6170-86	
14	Fixing Clamp	3	W2.5-07-06-09-00A	
15	Nut M6	6	GB6170-86	
16	Washer 6	6	GB93-87	
17	Frame Assy, Seat	1	W2.5DA-07C-06-04-00	
18	Washer, Plain 6	8	GB/T97.1	

XIII. Handle Part

(Cabin Type)

Handle Assy (With Cabin) W3.5H-07F-00

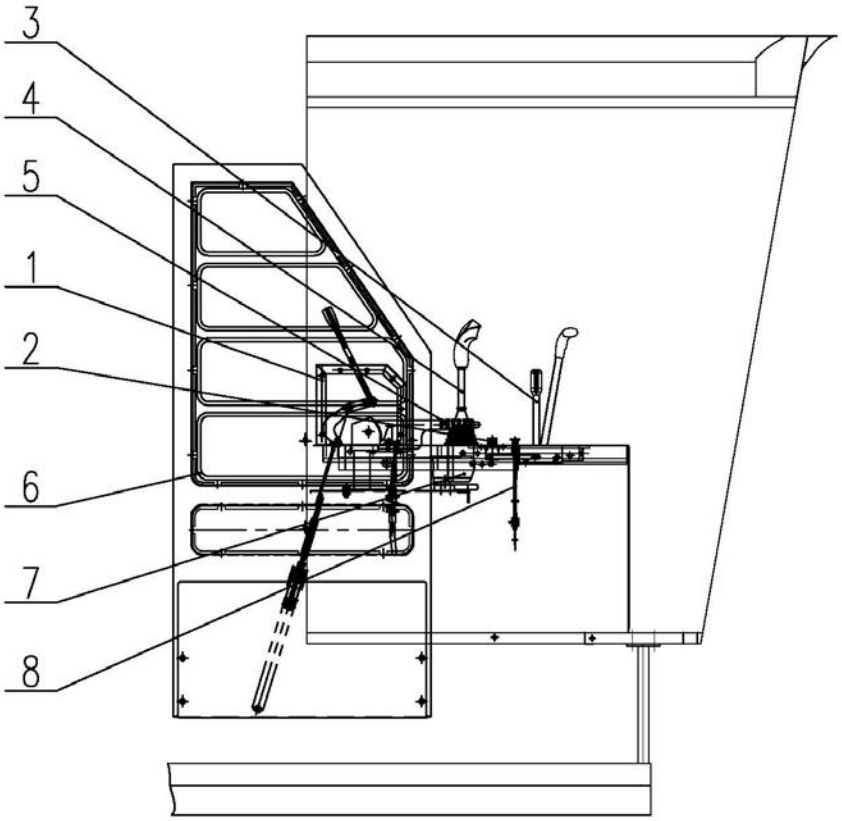

Handle Assy (With Cabin) W3.5H-07F-00

NO.	Description	QTY	Part Code	Note
1	Clutch Assy	1	W2.5E-07F-05-00	
2	Main/Auxiliary Shift	1	W3.5H-07F-04-00	
3	Main/Auxiliary Handle	1	W2.5E-07F-02-00	
4	Brake Lock	1	W2.5E-07F-03-00	
5	Cover Assy, Dust Proof	1	W3.5H-07F-06-00	
6	Seat	1	W2.0-07-06-01-00D	
7	Hand Throttle Assy	1	W2.5E-07F-08-00A	
8	Stopping String	1	W2.5E-07F-09-00A	

Dust Proof Cover AssyW3.5H-07F-06-00

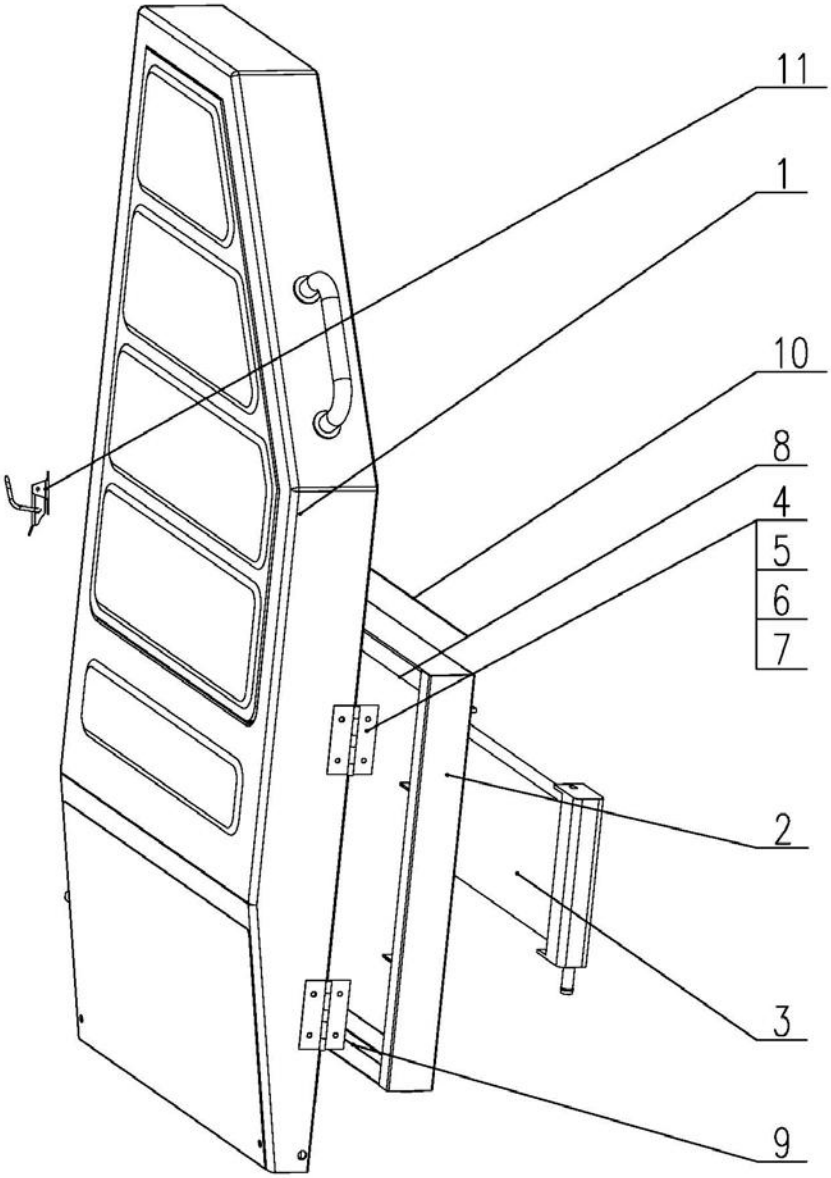

Dust Proof Cover AssyW3.5H-07F-06-00

NO.	Description	QTY	Part Code	Note
1	Cover Assy, Water Tank	1	W2.5E-07-06-03-00A	
2	Plate Weld	1	W2.5E-07-06-04-00	
3	Cooler, Oil	1	W2.5DD-05DC-20-00	
4	Hinge	2	4LZ.2A.29.2.3	
5	Bolt M6×16	8	GB5783-86	
6	Washer 6	8	GB96-86	
7	Washer 6	8	GB93-87	
8	Sponge, Seal	on demand	W2.5E-07-06-06	
9	Dust Proof Ring	2	W2.5DA-07-06-03-05	
10	Sealing (upper)	on demand	W2.0-02-47	
11	Fixing Clamp	2	W2.5-07-06-09-00A	

Main/Auxiliary Shift W3.5H-07F-04-00

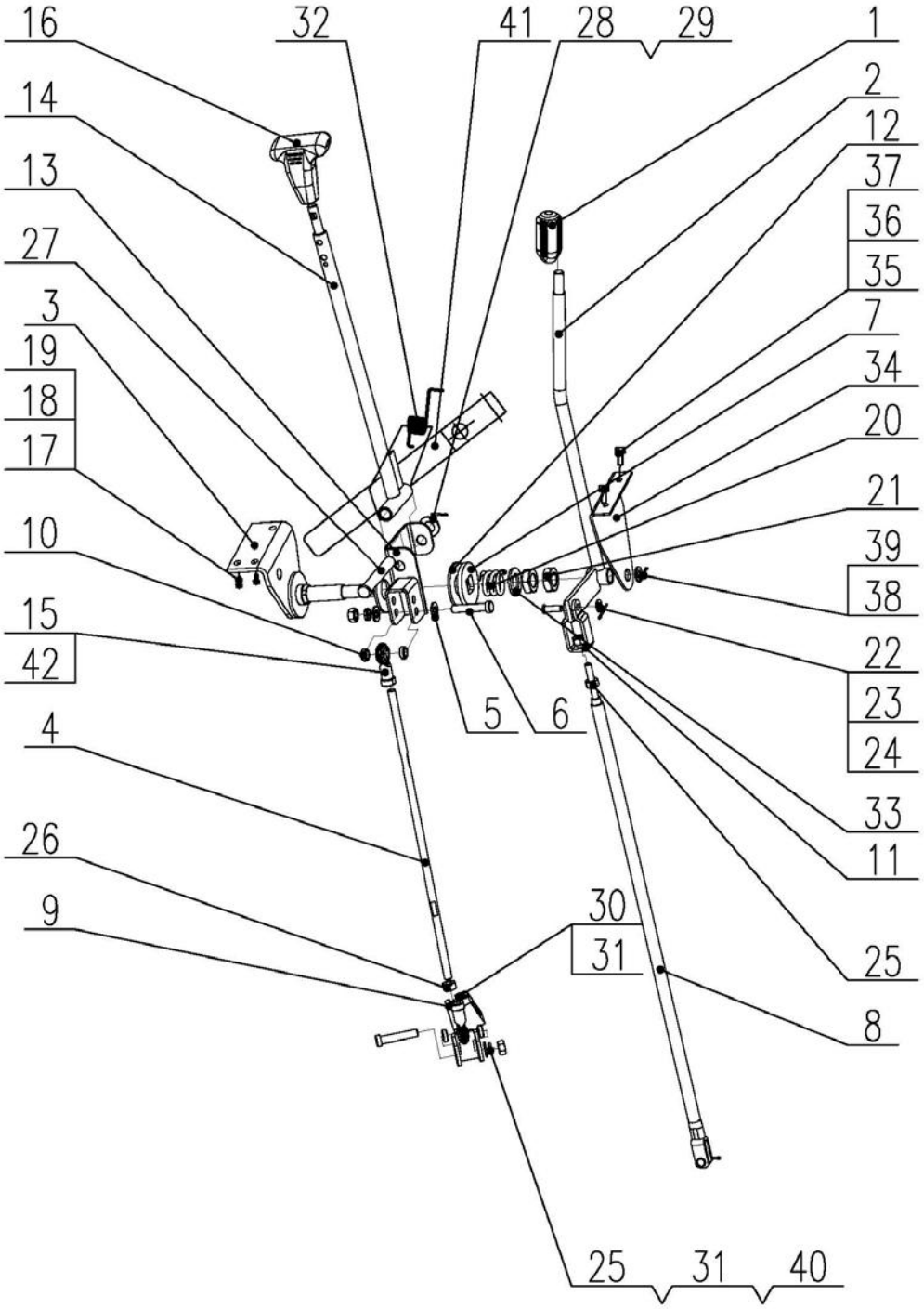

Main/Auxiliary Shift W3.5H-07F-04-00				
NO.	**Description**	**QTY**	**Part Code**	**Note**
1	Lever, Clutch	1	W2.5DA-07E-05-01	
2	Lever, Auxiliary Shift	1	W2.5E-07F-04-02A-00	
3	Frame	1	W2.5DA-07E-04-03-00	
4	Connecting Rod, HST	1	W3.5H-07F-04-04	
5	Washer, Plain 10	1	GB97.1-85	
6	Fixing Shaft, Lower	2	W2.5DA-07E-04-06	
7	Press plate	1	W2.0-07-04A-23	
8	Connecting Rod, Speed Changing	1	W3.5H-07F-04-07-00	
9	Lever, Speed Changing	1	W2.5DA-07E-04-08-00	
10	Sleeve	4	W2.5DA-07E-04-10	
11	Connecting Fork	1	W2.5D-07-04-09-00	
12	Washer, Plain	2	W2.0-07-04A-24	
13	Translation Frame Weld	1	W2.5E-07F-04-14	
14	Translation Level	1	W2.5E-07F-04-15A-00	
15	Bearing PHSA10	1	W2.5DA-07E-04-21L	
16	Handle, Main Shift	1	W2.5DA-07E-04-19	
17	Bolt M8×25	3	GB5783-86	
18	Cushion 8	3	GB93-87	
19	Washer, Plain 8	3	GB97.1-85	
20	Spring	1	W2.0-07-04A-25	
21	Nut M20×1.5	2	GB6173-86	
22	Pin Shaft B8×26	2	GB882-86	
23	Washer, Plain 8	2	GB97.1-86	
24	Pin 2.5×25	2	GB91-86	
25	Nut M10	4	GB6170-86	
26	Nut M10 (Left)	1	GB6170-86	
27	Pin Shaft B14×100	1	GB882-86	
28	Washer, Plain 14	1	GB97.1-86	
29	Pin 3.2×30	1	GB91-86	
30	Bolt M10×35	1	GB5783-86	
31	Cushion 10	3	GB93-87	
32	Spring	1	W2.5E-07F-04-20	
33	Washer 20	1	GB97.1-85	
34	Holder	1	W2.5E-07F-04-26	
35	Bolt M6×16	2	GB5783-86	
36	Washer 6	2	GB97.1-85	
37	Washer 6	2	GB93-85	
38	Washer 16	2	GB97.1-85	
39	Pin 3.2×30	1	GB91-86	

Main/Auxiliary Shift W3.5H-07F-04-00

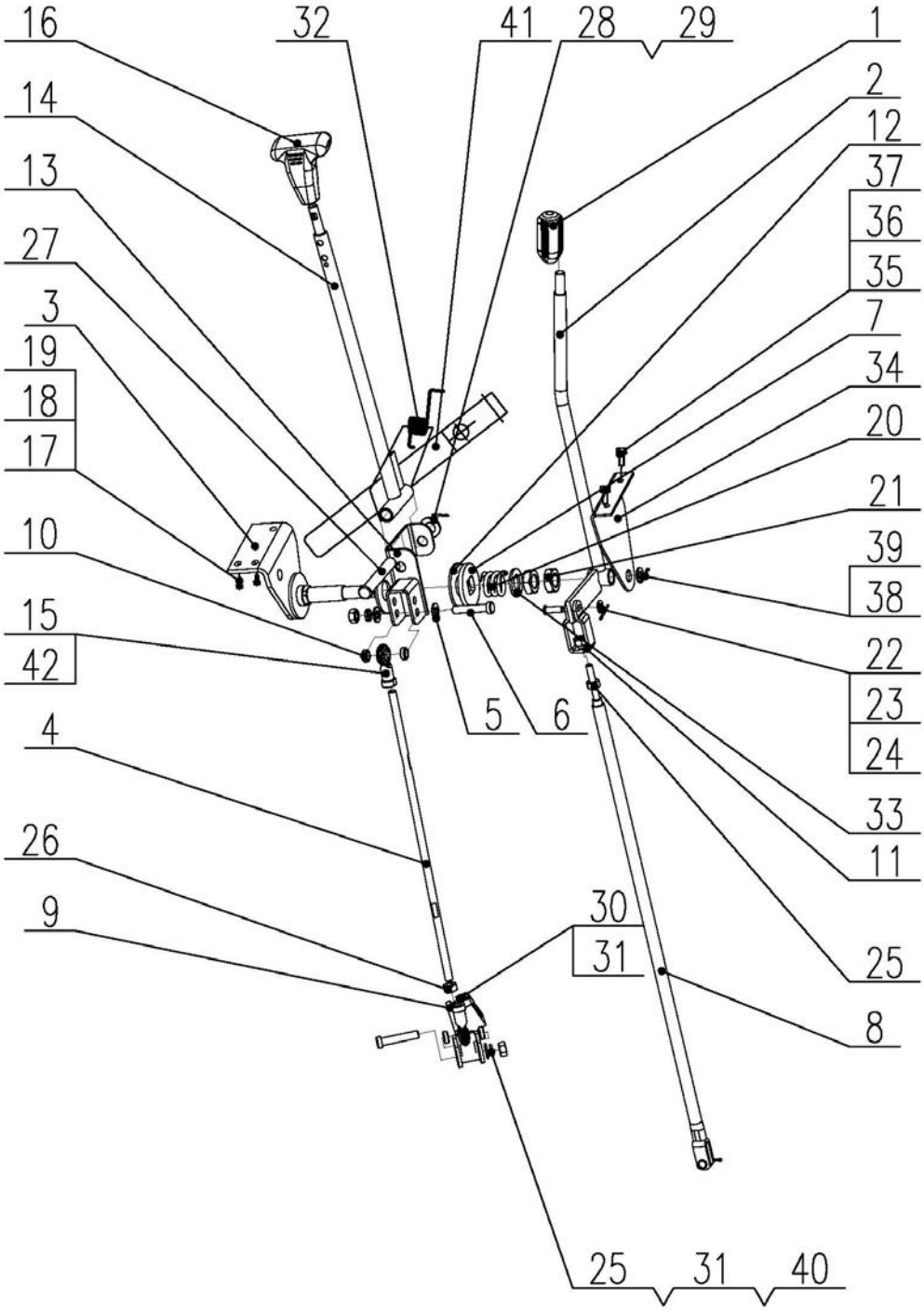

Main/Auxiliary Shift W3.5H-07F-04-00

NO.	Description	QTY	Part Code	Note
40	Washer 10, Plain	2	GB97.1-85	
41	Spring Plate	1	W2.5E-07F-04-27	
42	Bearing PHSA10	1	W2.5DA-07E-04-21R	

XIV. Canopy Part

Canopy Assy (Big Grain Tank, Canopy)

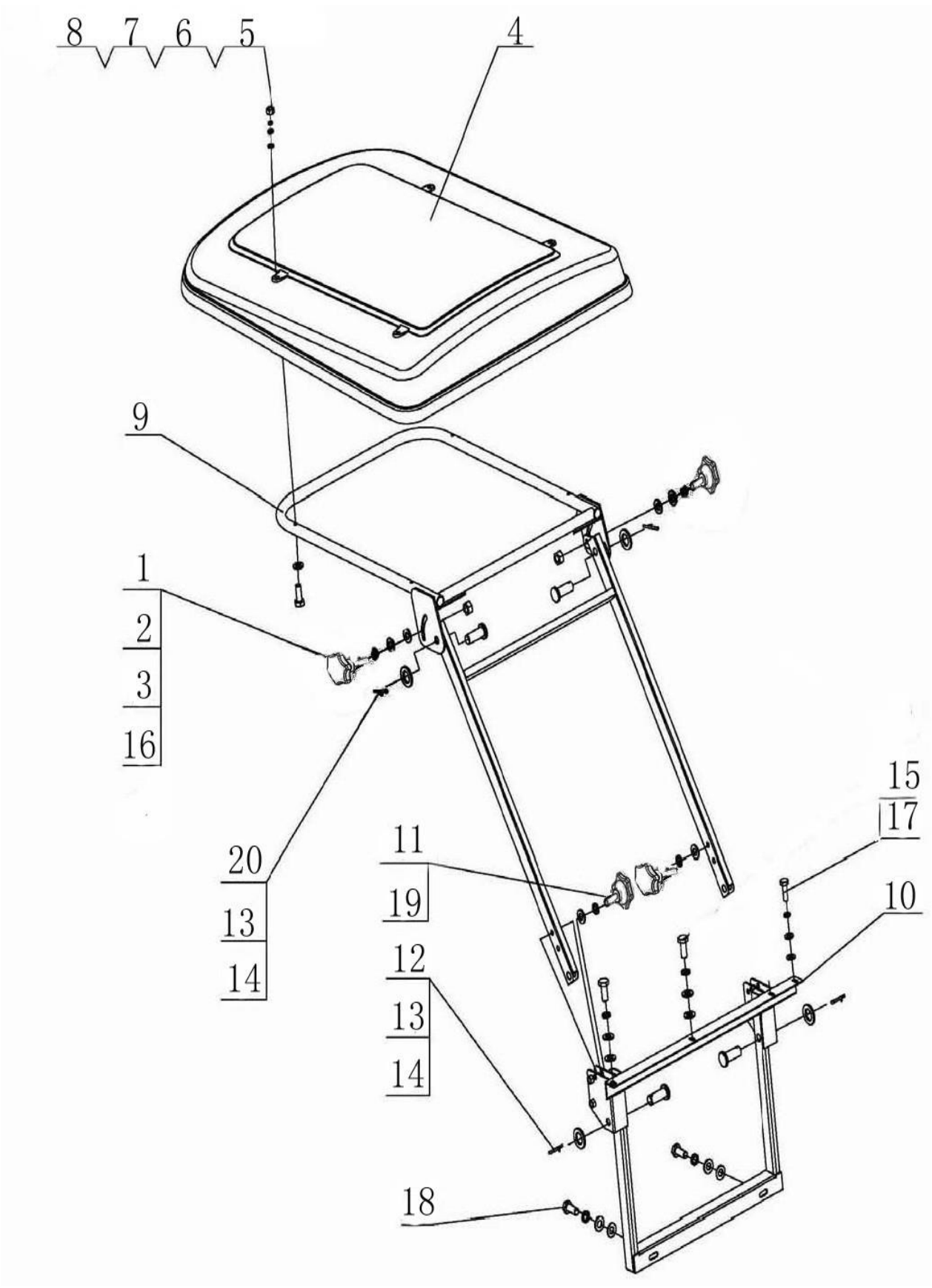

Canopy Assy (Big Grain Tank, Canopy)

NO.	Description	QTY	Part Code	Note
1	Bolt B	2	W3.5H-13B-04	
2	Washer 10	6	GB/T93-87	
3	Nut M10	2	GB/T6170-86	
4	Canopy	1	W2.0-13-03A	
5	boltM8X50	4	GB/T818-2000	
6	Washer 8	7	GB/T93-87	
7	Washer 8	8	GB/T96-85	
8	Nut M8	4	GB/T6170-86	
9	Support Weld, Upper	1	W3.5H-13B-02-00	
10	Support Weld, Lower	1	W3.5H-13B-01-00	
11	Bolt A	2	W3.5H-13B-03	
12	Pin Shaft B16X65	2	GB/T882-86	
13	Pin 4X30	4	GB/T91-86	
14	Washer 16	4	GB/T97.1-85	
15	Bolt M8X25	3	GB/T5783-86	
16	Washer 10	4	GB/T96-85	
17	Retaining Ring for Shaft	3	W2.0-02-11-08	
18	Bolt M10X25	2	GB/T5783-86	
19	Washer 10	2	GB/T97.1-85	
20	Pin Shaft B16X45	2	GB/T882-86	

Canopy Assy (Small Grain Tank, Canopy)

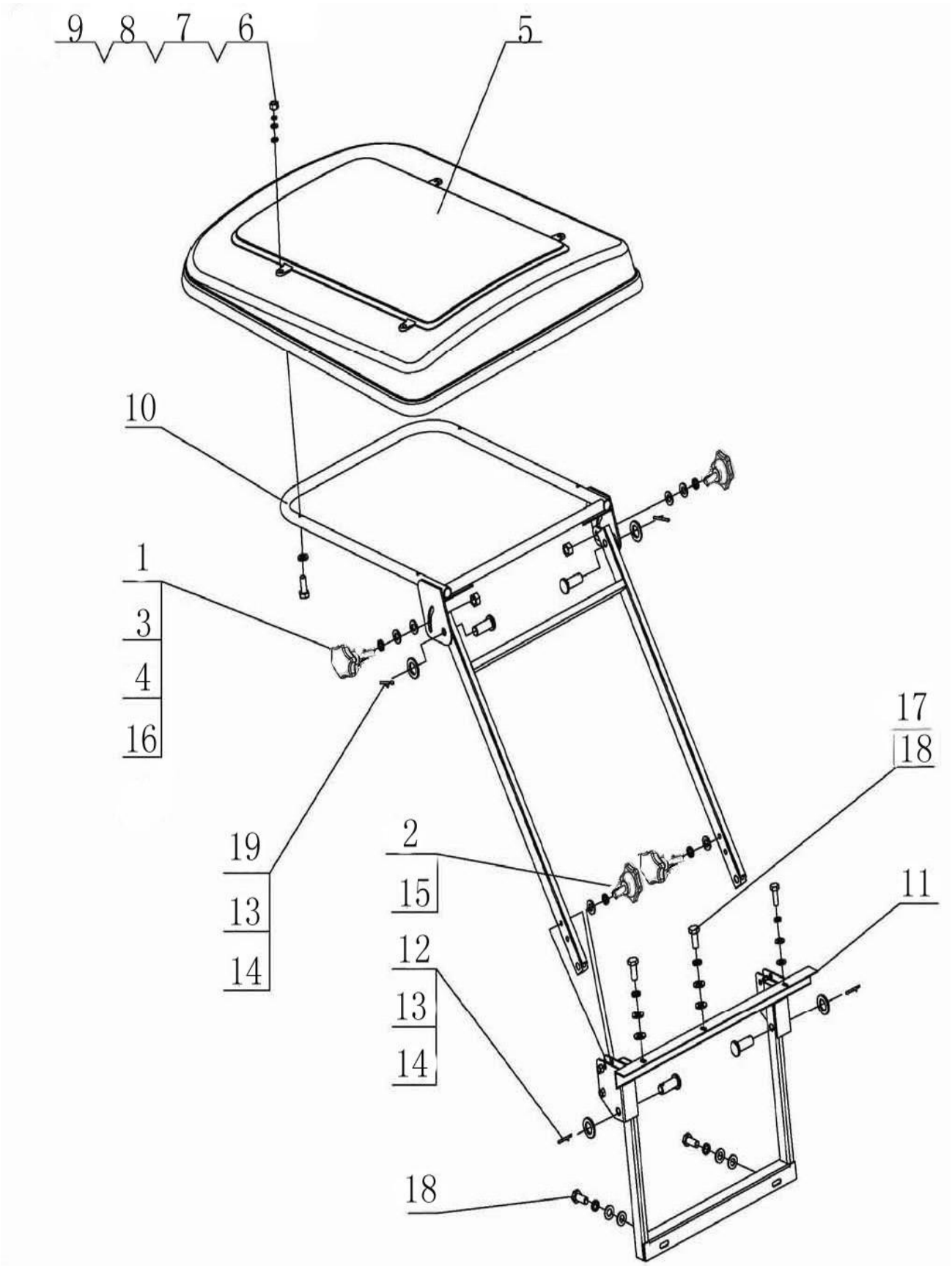

Canopy Assy (Small Grain Tank, Canopy)

NO.	Description	QTY	Part Code	Note
1	Bolt B	2	W3.5H-13B-04	
2	Washer 10	2	GB/T97.1-85	
3	Washer 10	9	GB/T93-87	
4	Nut M10	2	GB/T6170-86	
5	Canopy	1	W2.0-13-03A	
6	Bolt M8X50	4	GB/T818-2000	
7	Washer 8	4	GB/T93-87	
8	Washer 8	8	GB/T96-85	
9	Nut M8	4	GB/T6170-86	
10	Support Weld, Upper	1	W3.5H-13A-02-00	
11	Support Weld, Lower	1	W3.5H-13A-01-00	
12	Pin Shaft B16X65	2	GB/T882-86	
13	Pin 4X30	4	GB/T91-86	
14	Washer 16	4	GB/T97.1-85	
15	Bolt A	2	W3.5H-13B-03	
16	Washer 10	4	GB/T96-85	
17	Gasket, Big	3	W2.5-02-56-26	
18	Bolt M10X25	5	GB/T5783-86	
19	Pin Shaft B16X45	2	GB/T882-86	

XV. Cabin Part

W3.5H-20-00 Cabin Assy (Air condition Cabin)

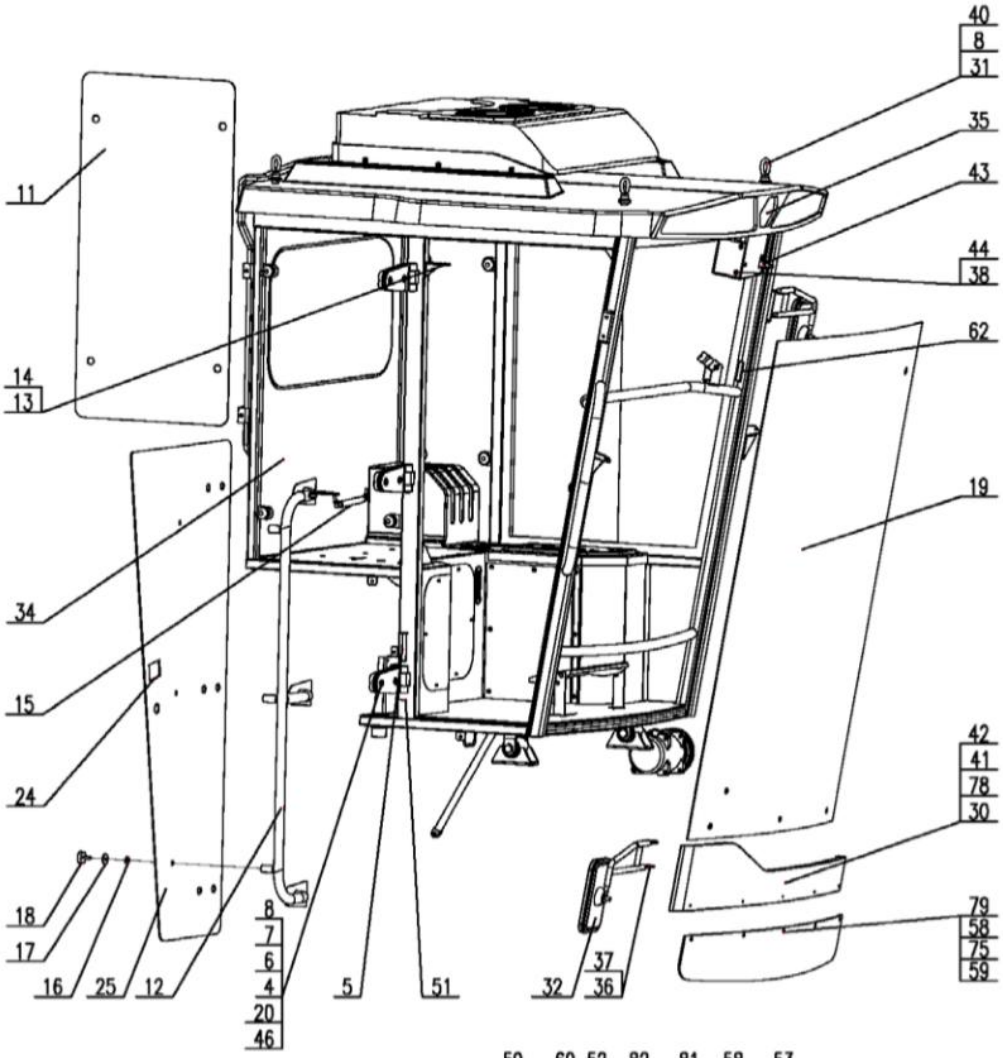

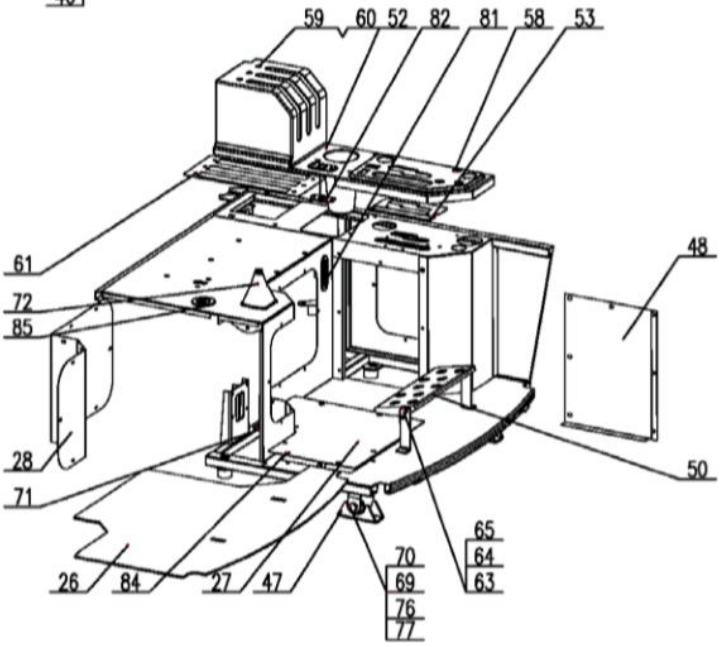

W3.5H-20-00 Cabin Assy (Air condition Cabin)

NO.	Description	QTY	Part Code	Note
1	Cabin Weld	1	W2.5MT-20-01-00	
2	Cover Plate	1	W2.5M-20-07	
3	Glass Assy, Left Window	1	W2.5M-20-85-00	
4	Hinge	3	W2.5-20K-04	
5	Pin Shaft, Hinge	3	W2.5-20D-85	
6	Bolt M10×25	6	GB5783-86	
7	Washer 10	10	GB93-87	
8	Washer 10	14	GB96-85	
9	Glass, Left, Rear	1	W2.5M-20-32	
10	Glass, Rearview	1	W2.5M-20-15	
11	Glass, Right, Rear	1	W2.5M-20-22	
12	Armrest Weld	1	WD.20MK-19-00	
13	Washer 8	11	GB93-87	
14	Nut M8	1	GB/T923-88	
15	Supporting Rod	1	WD.20MK-30	
16	Washer, Rubber	3	W2.5-20K-23	
17	Washer, Rubber	3	W2.5-20K-24	
18	Bolt	11	W2.5-20K-25	
19	Glass, Front	1	W2.5M-20-17	
20	Gasket	6	W2.5-20K-26	
21	Washer, Rubber	8	W2.5-20K-27	
22	Washer, Rubber	8	W2.5-20K-28	
23	Nut, Window	8	W2.5-20K-29	
24	Lock	1		
25	Glass, Right Door	1	W2.5M-20-46	
26	Bottom Plate	1	W2.5M-20-42	
27	Cover Plate, Oil Filling	1	W2.5M-20-26	
28	Cover Plate	1	W2.5MT-20-20	
29	Roof Assy	1	W2.5-20K-73-00	
30	Plate, Front	1	W2.5M-20-54-00	
31	Connecting Hook	4	W2.5-20B-67	
32	Reflector Assy	2	WD-ZS-9F624	
33	Roof	1	W2.5M-20-52	
34	Plate	1	W2.5M-20-55-00	
35	Label	1	WDT.400C.47B.215	
36	Bolt M10×100	2	GB5783-86	
37	Nut M10	8	GB6170-86	
38	Bolt Φ7	12		
39	Air-conditioner Assy	1	W3.5H-20-70-00	
40	Washer, Rubber	4	W2.5-20B-90	

W3.5H-20-00 Cabin Assy (Air condition Cabin)

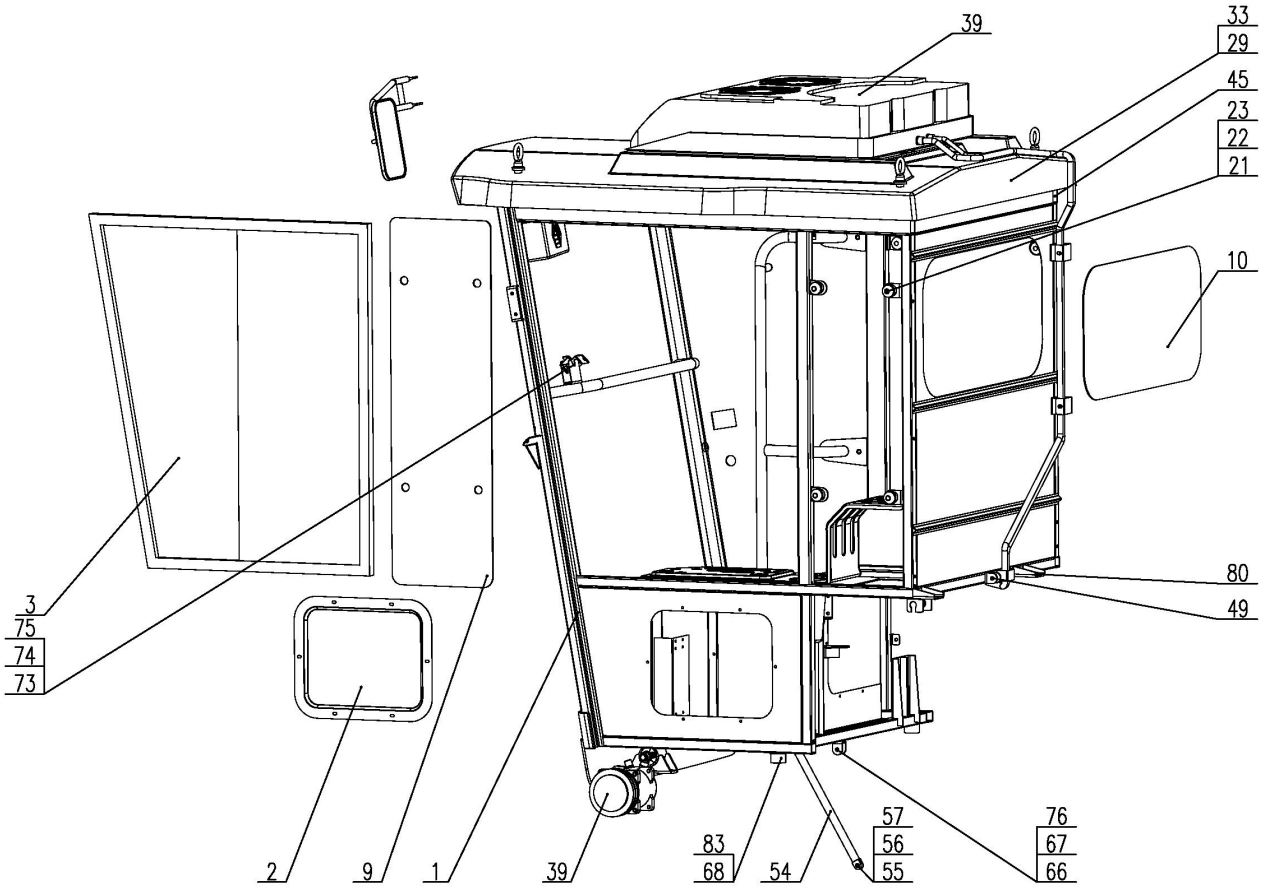

W3.5H-20-00Cab Assy(Air condition Cab)

NO.	Description	QTY	Part Code	Note
41	Washer	4	WD.20ME-59	
42	Nut M6	8	GB6170-86	
43	Rain Wiper Assy	1	WD.20MF.56	
44	Motor Cover	1	WD.20MF-80	
45	Stopper	2	W2.5-20D-82	
46	Cover, Rubber	9	W2.5-20D-84	
47	Shock-absorbing Cushion Assy	2	W2.5M-20-36-00	
48	Plate, Left	1	W2.5M-20-45	
49	Rope, Steel	1	W2.5M-20-48	
50	Pedal	1	W2.5M-20-47	
51	Retaining Ring 12	3	GB894-86	
52	Operation Panel	1	W2.5M-20-62	
53	Hairbrush, Main/ Auxiliary Shift	1	W2.5M-20-74	
54	Air Brake	1	W2.5M-20-50	
55	Pin12×55	1	GB882-86(BType)	
56	Pin, Spring	2	W2.5E-07F-04-04-03	

W3.5H-20-00Cab Assy(Air condition Cab)				
NO.	**Description**	**QTY**	**Part Code**	**Note**
57	Washer 12	2	GB96-85	
58	Washer 6	32	GB96-85	
59	Bolt M6×18	33	GB/T818-2000	
60	Washer 6	5	GB97.1-85	
61	Hairbrush, Operation Box	1	W2.5-20B-77	
62	Stopper, Left, Front	1	W2.5M-20-49	
63	Pin 8×20	2	GB882-86(BType)	
64	Pin 3.2×20	6	GB91-86	
65	Washer 8	13	GB96-85	
66	Rope, Steel	1	W2.5M-20-79	
67	Pin12×40	4	GB882-86(BType)	
68	Shock-absorbing Cushion	2	W2.5M-20-80	
69	Washer 12	4	GB93-87	
70	Nut M12	4	GB6170-86	
71	Buckle	1	W2.5M-20-51	
72	Sleeve	1	W2.0-07-02-06	
73	Instrument Seat Weld	1	W2.5M-20-58-00	
74	Nut M6	2	GB62-88	
75	Washer 6	7	GB93-87	
76	Washer 12	12	GB97.1-85	
77	Bolt 12×35	4	GB5783-86	
78	Washer, Rubber	8	W2.5M-20-57	
79	Baffle	1	W2.5M-20-29	
80	Bolt M10×30	2	GB5783-86	
81	Washer, Rubber	1	W2.5MT-20-90	
82	Stopping String	1	W2.5MT-20-89-00	
83	Washer	2	W2.5M-20-92	
84	Bolt M8×20	9	GB5783-86	
85	Dust Proof Ring	1	W2.5M-20X-53	

XVI. Lower Blade Part

Lower Blade Assy

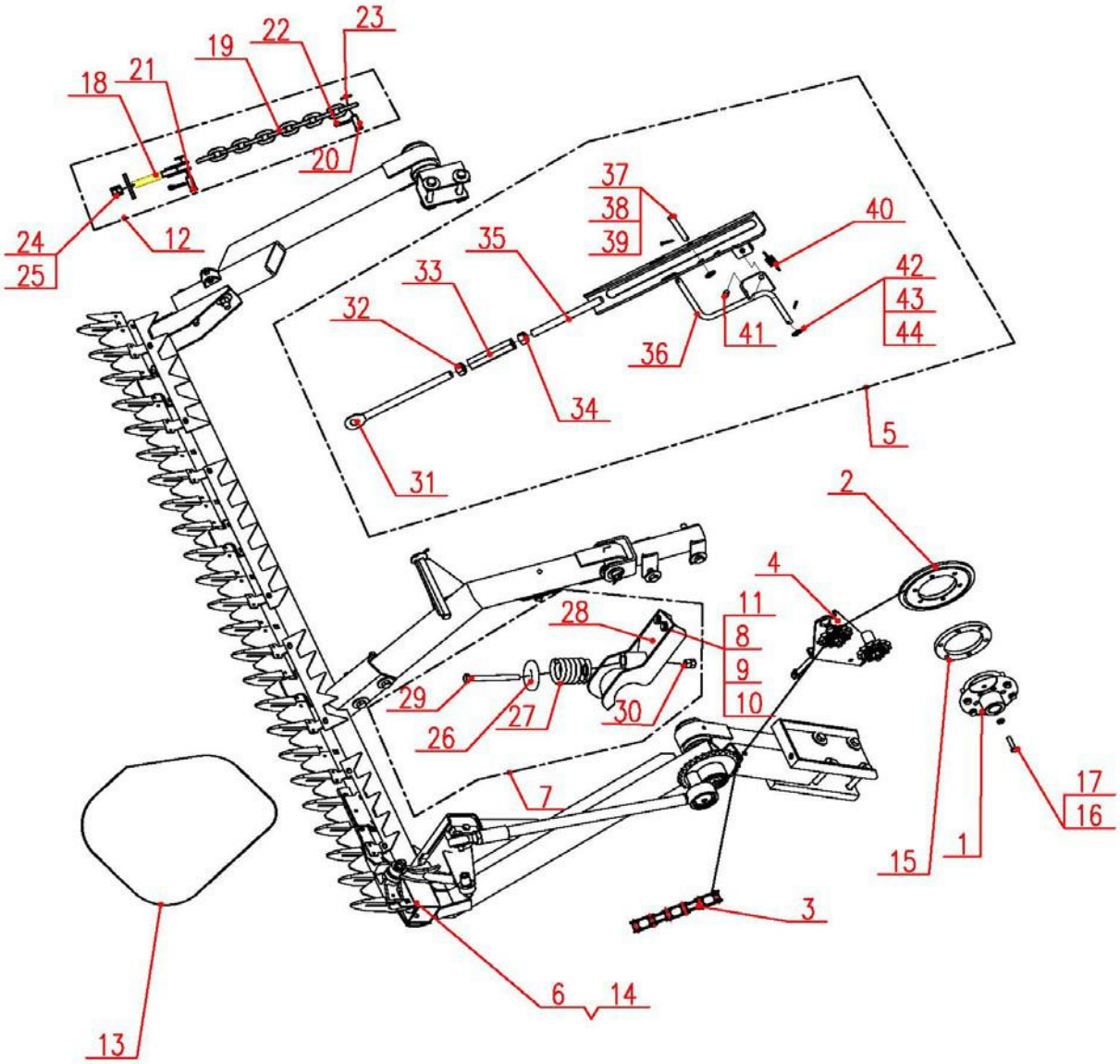

Lower Blade Assy

NO.	Description	QTY	Part Code	Note
1	Hub, Left Driving	1	W2.5E-01B-02-38X	
2	Driving Chain Wheel, Auxiliary Blade	1	W2.5E-10T-03D	
3	Roller Chain 10A-136	1	GB/T1243.1-83	
4	Plate Assy, Support	1	W2.5E-10T-06-00	
5	Lever Assy	1	W2.5E-10T-13B-00	
6	Blade Assy, Lower (2.0m)	1	W2.5E-10T-02C-00A	
7	Limiter Assy	1	W2.5E-10T-05-00	
8	Bolt M12×30	2	GB/T5783-86	
9	Washer 12	2	GB/T 93-87	
10	Washer 12	2	GB/T97.1-85	
11	Nut M12	2	GB/T6170-86	
12	Inhaul Cable Assy	1	W2.5E-10T-17A-00	
13	Cover Weld	1	W2.5E-10T-15C-00	
14	Blade Assy, Lower (2.2m)	1	W2.5E-10T-20C-00A	
15	Plate	1	W2.5E-10T-16B	
16	Bolt M8×35	6	GB/T5782-86	
17	Washer 8	6	GB/T93-87	
18	Screw Weld	1	W2.5E-10T-17A-01-00	
19	Chain	1	W2.5E-10T-17A-03	
20/21	Pin Shaft B12X40/32	1	GB/T882-86	
22/25	Washer 12/Nut M12	2	GB/T97.1-85/6170-86	
23	Pin	2	XSS46-06	
24	Plate, Limiter	1	W2.5E-10T-17-02	
26	Press Cover	1	W2.5E-10T-05-03	
27	Spring, Limiter	1	W2.5E-10T-05-02	
28	Plate Weld, Limiter	1	W2.5E-10T-05-01-00	
29/30	Bolt M12×130/Nut M12	1/2	GB/T5782-86/6170-86	
31	Lever B	1	W2.5E-10T-13-06	
32	Nut M16 (Left)	1	GB/T6170-86	
33	Sleeve, Nut	1	W2.5E-10T-13-05	
34	Nut M16	1	GB/T6170-86	
35	Adjusting Arm Weld	1	W2.5E-10T-13B-01-00	
36	Revolving Seat Weld	1	W2.5E-10T-13-02-00	
37	Pin Shaft B12×65	1	GB/T882-86	
38	Washer 12	1	GB/T97.1-85	
39	Pin 4×30	1	GB/T91-86	
40	Tension Spring	1	W2.5E-10T-13-04	
41	Pin 2×40	1	GB/T4329-2001	
42	Pin Shaft B10×26	1	GB/T882-86	
44	Pin 3.2×30	1	GB/T91-86	

Support Plate Assy

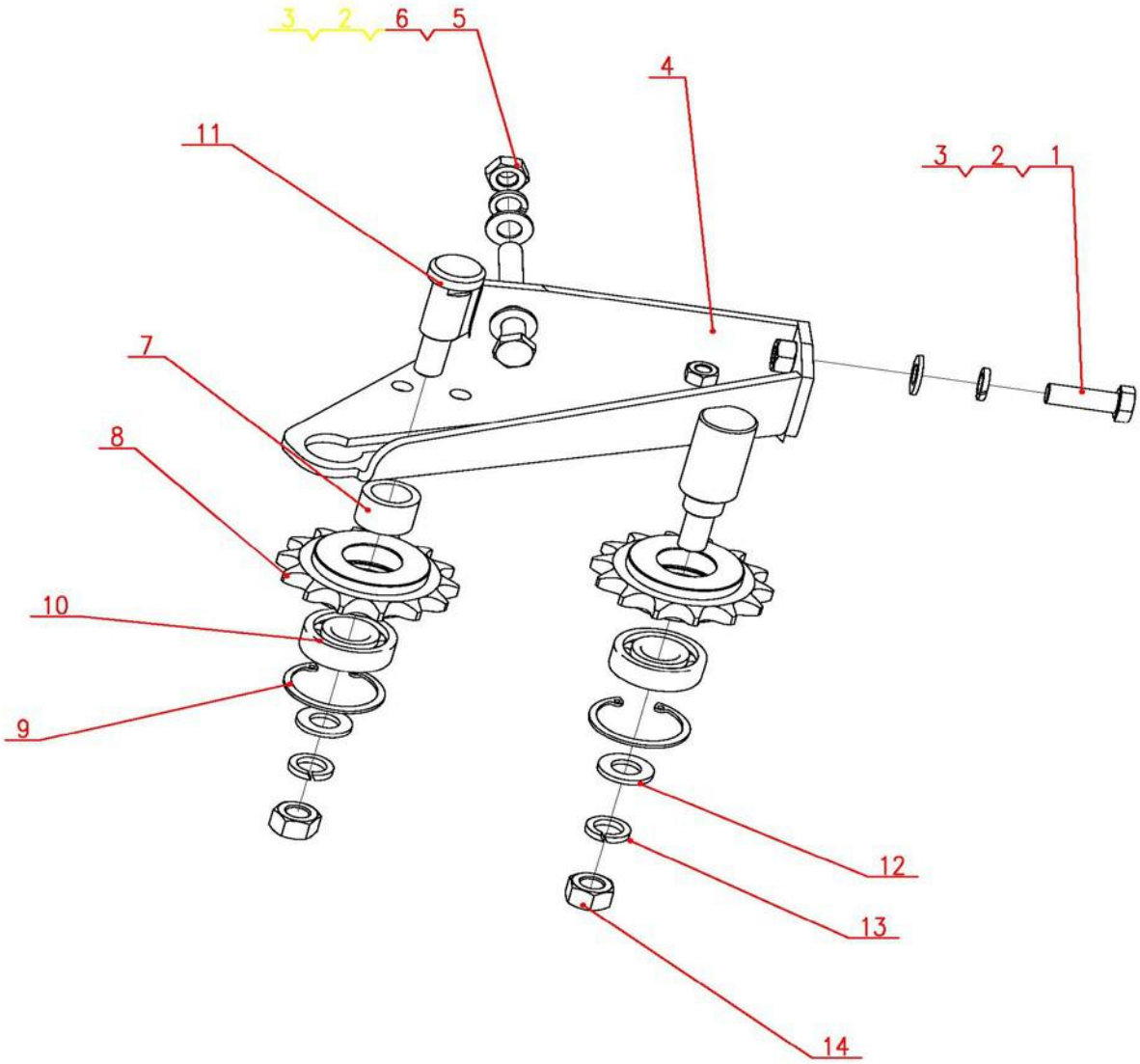

Support Plate Assy

NO.	Description	QTY	Part Code	Note
1	Bolt M10×30	1	GB/T5783-86	
2	Washer 10	3	GB/T97.1-85	
3	Washer 10	2	GB/T93-87	
4	Supporting Plate Weld	1	W2.5E-10T-06-01-00	
5	Bolt M10×90	1	GB/T5783-86	
6	Nut M10	1	GB/T6170-86	
7	Sleeve	1	W2.5E-10T-06-03	
8	Tension Chain Wheel 10A-14	2	L1.8A-03-28-02	
9	Retaining Ring for Bore 40	2	GB/T893.1-86	
10	Bearing 6203-2RS	2	GB/T276-94	
11	Shaft, Short	1	W2.5E-10T-06-02	
12	Washer 12	2	GB/T97.1-85	
13	Washer 12	2	GB/T93-87	
14	Nut M12	2	GB/T6170-86	

Lower Blade Assy

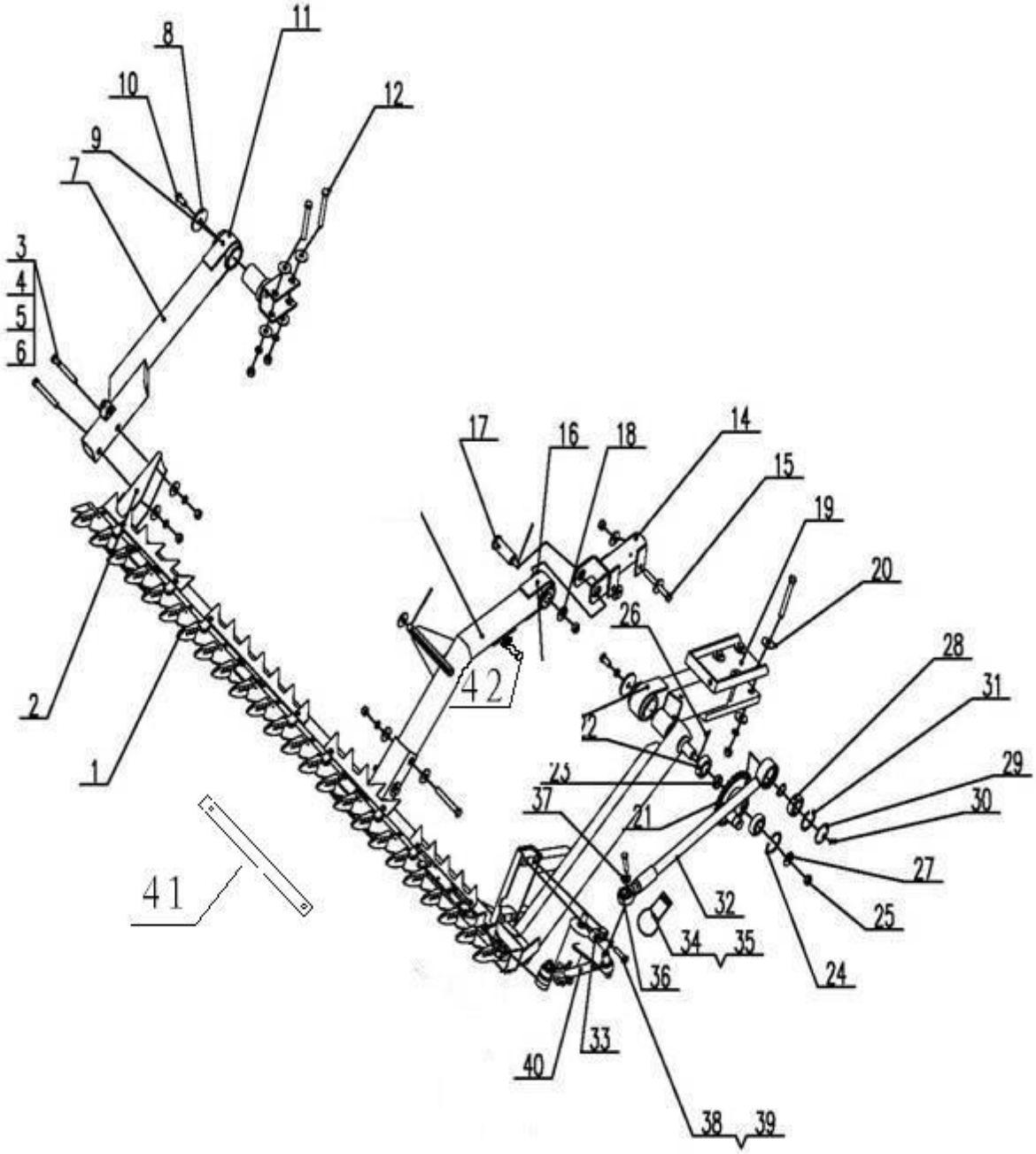

Lower Blade Assy

NO.	Description	QTY	Part Code	Note
1	Blade Assy	1	W2.5E-10T-02C-02-00	2.0m
	Blade Assy	1	W2.5E-10T-20C-02-00	2.2m
2	Lower Blade Weld	1	W2.5E-10T-02C-01A-00	2.0m
	Lower Blade Weld	1	W2.5E-10T-20C-01A-00	2.2m
3	Bolt M12×90	8	GB/T5782-86	
4	GB/T96-85	12	Washer 12	
5	GB/T93-87	14	Washer 12	
6	Nut M12	12	GB/T6170-86	
7	Support Arm Weld, Right	1	W2.5E-10T-02C-09-00	
8	Washer	2	W2.5E-10T-02A-21	
9	Oil Cup M8×1	3	GB/T1152-89	
10	Bolt M12×25	2	GB/T5783-86	
11	Connecting Seat Weld, Right	1	W2.5E-10T-02A-06-00	
12	Bolt M12×100	2	GB/T5782-86	
13	Supporting Arm Assy, Middle	1	W2.5E-10T-02C-10A-00	
14	Connecting Seat Weld	1	W2.5E-10T-02A-13-00	
15	Bolt M12×70	2	GB/T5782-86	
16	Shaft Sleeve	1	W2.5E-10T-02A-22	
17	Pin Shaft	1	W2.5E-10T-02B-23	
18	Retaining Ring	1	WD.6M.2-02	
19	Revolving Sleeve Weld, A	1	W2.5E-10T-02C-08-00	
20	Washer 12	12	GB/T97.1-85	
21	Eccentric Chain Wheel Assy	1	W2.5E-10T-02-05-00	
22	Bearing 6205-RS	2	GB/T276-94	
23	Sleeve	1	L18A.10.3-02	
24	Retaining Ring for Bore 52	3	GB/T893.1-86	
25	Pin 3.2×28	2	GB/T91-86	
26	Nut M12	2	GB/T6181-86	
27	Retaining Ring	1	L18A.10-01	
28	Bearing 1205	1	W2.0-01-01-07-12	
29	Cover, Dust Proof	1	W2.0-01-01-07-07	
30	Oil Cup M6	1	GB/T1152-89	
31	Circlip for Shaft 25	1	GB/T894.2-86	
32	Connecting Rod Weld	1	W2.5E-10T-02C-04-00	
33	Press Plate	2	L1.8A-01-11-22	
34	Sleeve	1	W.1.5B-08	
35	Throat Hoop C30~40	1	JB/T8870-1999	
36	Bearing	1	W2.0-01-01-07-05-00	

Lower Blade Assy

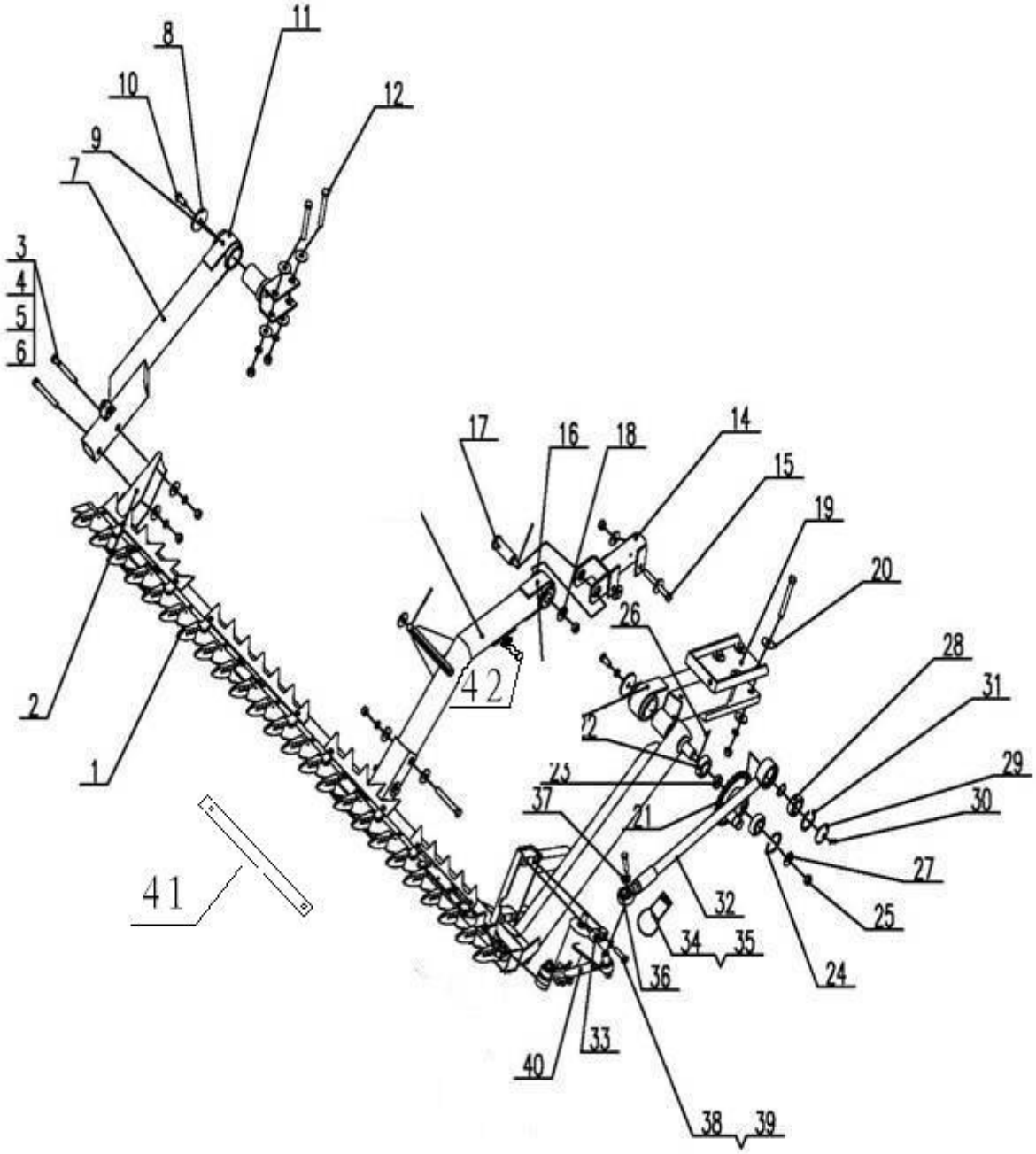

Lower Blade Assy

NO.	Description	QTY	Part Code	Note
37	Press Plate (II)	1	W2.0-01-01-07-04	
38	Bolt M10×40	4	GB/T5783-86	
39	Washer 10	4	GB/T93-87	
40	Triangle Swing Arm	1	W2.5E-10T-02C-03-00	
41	Stiffened Plate	1	W2.5E-10T-02C-28-00	
42	Bolt M12X70	1	GB/T5783-86	

Upper Blade Assy (2 m)

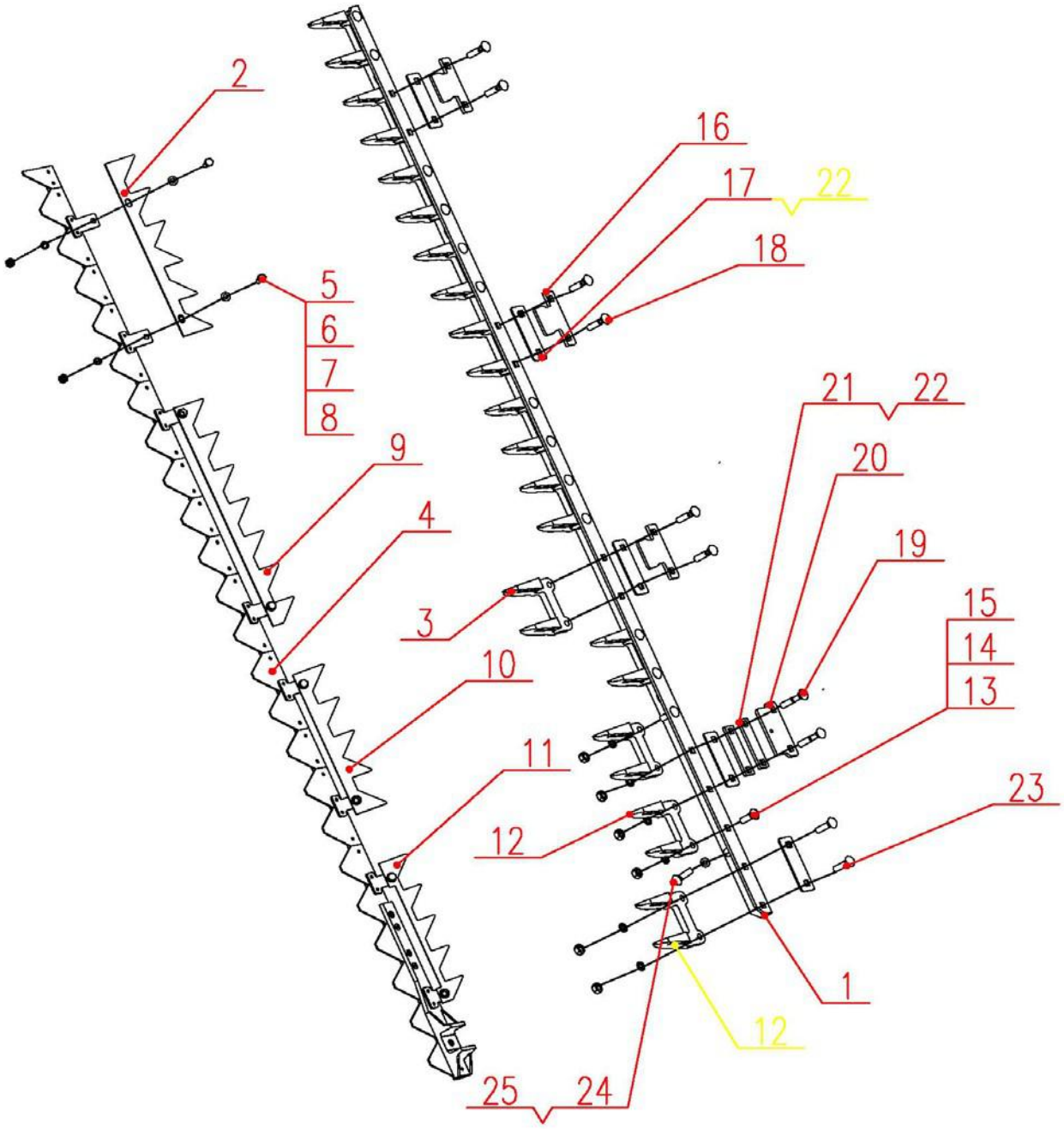

Upper Blade Assy (2 m)

NO.	Description	QTY	Part Code	Note
1	Blade Beam	1	W2.5E-10T-02C-02-03	
2	Convey Rack, Right	1	W2.5E-10T-02B-02-04	
3	Blade Guide B	10	W2.0-01-01-03G-04	
4	Blade Bar Weld	1	W2.5E-10T-02C-02-01-00	
5	Bolt M8×18	8	GB/T5783-86	
6	Washer 8	8	GB/T97.1-85	
7	Washer 8	8	GB/T93-87	
8	Nut M8	8	GB/T6170-86	
9	Convey Rack, Right, B	1	W2.5E-10T-02B-02-09	
10	Convey Rack, Middle	1	W2.5E-10T-02B-02-05	
11	Convey Rack, Left	1	W2.5E-10T-02B-02-06	
12	Blade Guide A	2	W2.0-01-01-03G-01	
13	Bolt M10×30	14	GB/T12-88	
14	Washer 10	29	GB/T93-87	
15	Nut M10	24	24GB/T6170-86	
16	Blade Pressed	3	W2.0-01-01-03G-10	
17	Friction Plate	5	W2.0-01-01-03G-08	
18	Bolt M10×40	6	GB/T12-88	
19	Bolt M10×50	2	GB/T12-88	
20	Press Plate	1	W2.0-01-01-03G-09	
21	Plate	2	W2.0-01-01-03-05	
22	Washer, Adjusting	on demand	W2.0-01-01-03G-07	
23	Bolt M10×35	2	GB/T12-88	
24	Bolt M10×25	5	GB/T5783-86	
25	Washer 10	5	GB/T97.1-85	

Blade Assy (2.2 m)

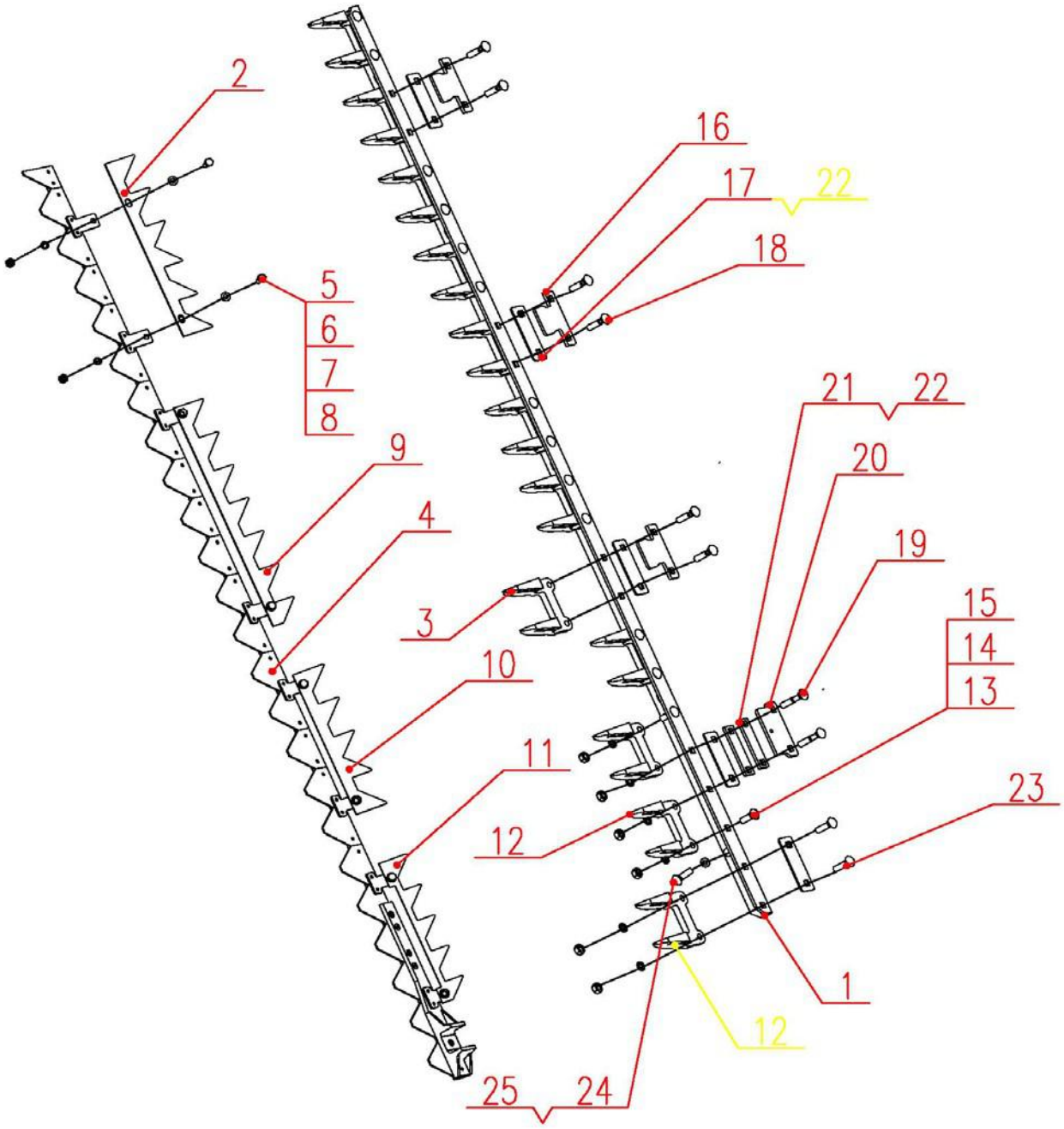

Blade Assy (2.2 m)

NO.	Description	QTY	Part Code	Note
1	Blade Beam	1	W2.5E-10T-20C-02-03	
2	Convey Rack, Right	1	W2.5E-10T-02B-02-04	
3	Blade Guide, B	11	W2.0-01-01-03G-04	
4	Blade Bar Weld	1	W2.5E-10T-20C-02-01-00	
5	Bolt M8×18	8	GB/T5783-86	
6	Washer 8	8	GB/T97.1-85	
7	Washer 8	8	GB/T93-87	
8	Nut M8	8	GB/T6170-86	
9	Convey Rack, Right, B	1	W2.5E-10T-02B-02-09	
10	Convey Rack, Middle	1	W2.5E-10T-02B-02-05	
11	Convey Rack, Left	1	W2.5E-10T-02B-02-06	
12	Blade Guide A	2	W2.0-01-01-03G-01	
13	Bolt M10×30	16	GB/T12-88	
14	Washer 10	29	GB/T93-87	
15	Nut M10	24	24GB/T6170-86	
16	Press Plate	3	W2.0-01-01-03G-10	
17	Friction Plate	5	W2.0-01-01-03G-08	
18	Bolt M10×40	6	GB/T12-88	
19	Bolt M10×50	2	GB/T12-88	
20	Press Plate	1	W2.0-01-01-03G-09	
21	Plate	2	W2.0-01-01-03-05	
22	Washer, Adjusting	on demand	W2.0-01-01-03G-07	
23	Bolt M10×35	2	GB/T12-88	
24	Bolt M10×25	5	GB/T5783-86	
25	Washer 10	5	GB/T97.1-85	

Triangle Swing Arm Assy

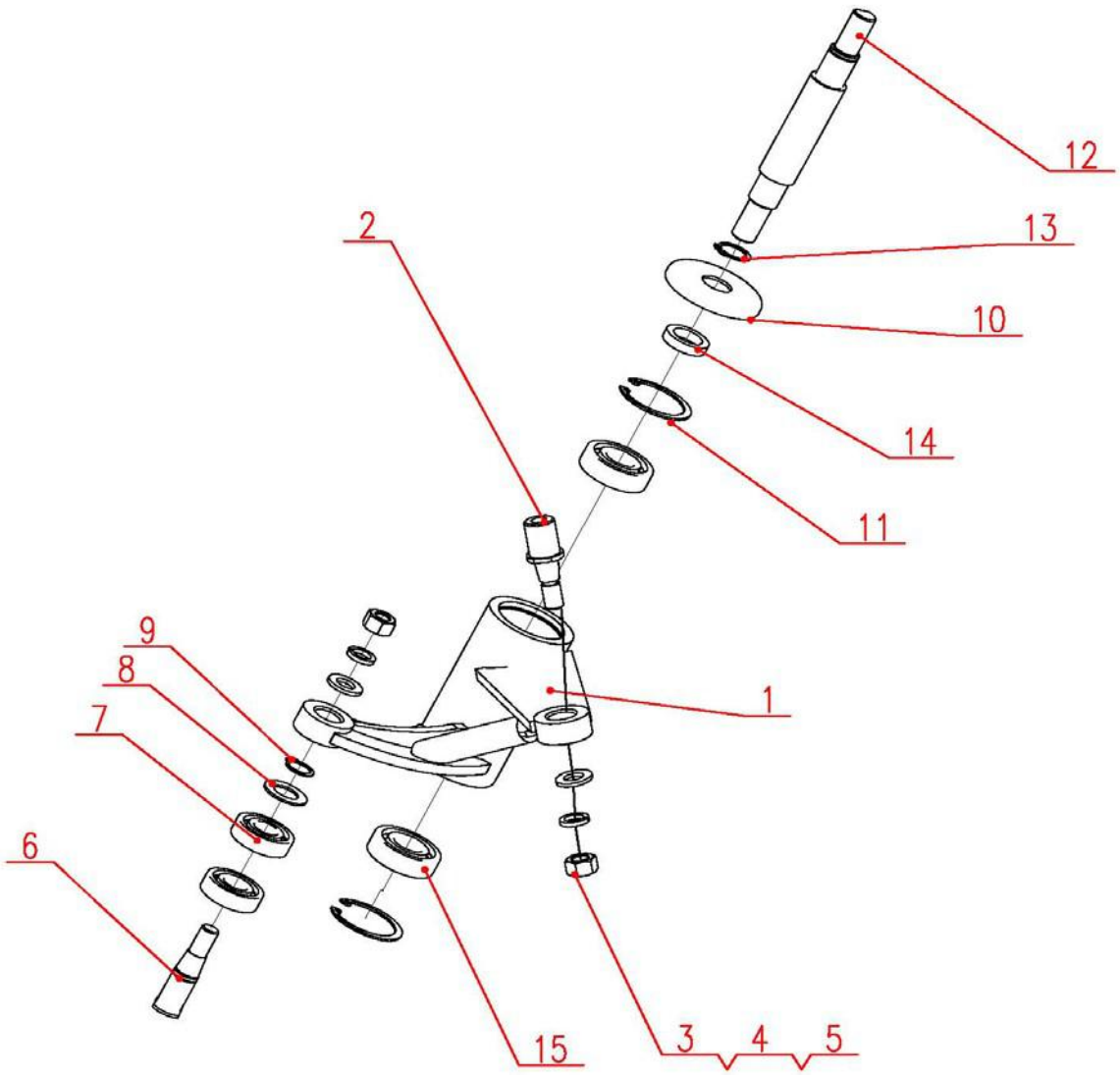

Triangle Swing Arm Assy

NO.	Description	QTY	Part Code	Note
1	Triangle Swing Arm Weld	1	W2.5E-10T-02C-03-01-00	
2	Shaft	1	W2.0-01-01-07-01-03	
3	Washer 12	2	GB/T97.1-85	
4	Washer 12	2	GB/T93-87	
5	Nut 12	2	GB/T6170-86	
6	Pin Shaft	1	W2.0-01-01-07-01-09	
7	Bearing 6203-2RS	2	W2.0-01-01-07-01-10	
8	Cover, Mud Proof	1	W2.0-01-01-07-01-08	
9	Circlip for Shaft 17	1	GB/T894.2-86	
10	Cover, Dust Proof	1	W2.0-01-01-07-01-04	
11	Circlip for Bore 47	2	GB/T893.1-86	
12	Swing Rod, Shaft	1	W2.5E-10T-02A-03-02	
13	Circlip for Shaft 20	1	GB/T894.2-86	
14	Nylon Sleeve	1	W2.5E-10T-02-03-03	
15	Bearing 6204-RS	2	GB/T276-94	

XVII. Grain Tank Part

Grain Tank Assy (W3.5H-04BX-00, W3.5H-04GX-00)

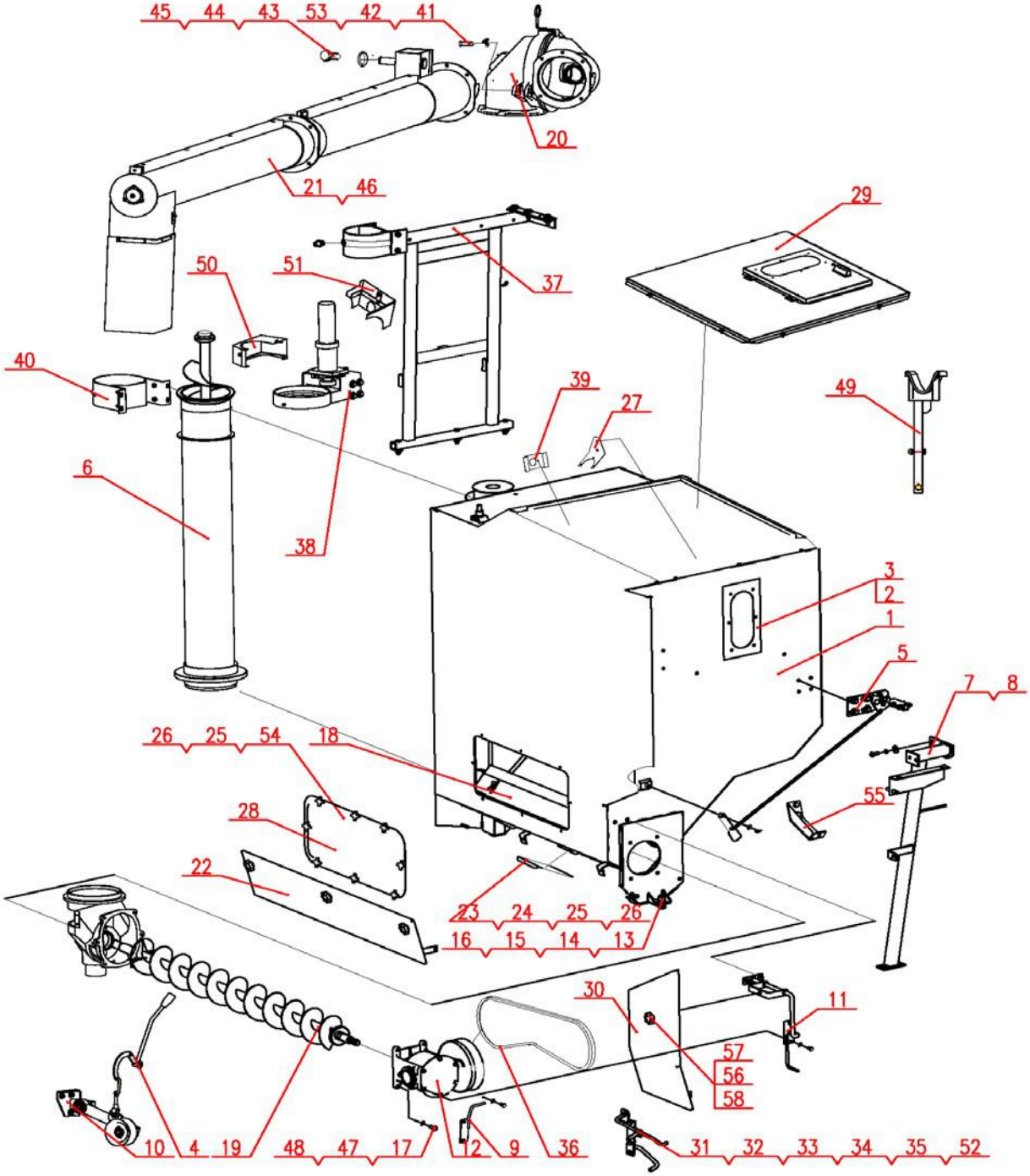

Grain Tank Assy (W3.5H-04BX-00, W3.5H-04GX-00)

NO.	Description	QTY	Part Code	Note
1	Grain Tank Weld	1	W3.5H-04BX-01-00	Canopy
	Grain Tank Weld	1	W3.5H-04GX-01-00	Cabin
2	Filtering Cover	1	W2.5-04-02-03-07	
3	Rivet φ3.2×9	6	GB/T12618-1990	
4	Unloading Operation Assy	1	W3.5H-04BX-03-00	Canopy
5	Lever Assy	1	W2.5B-04CY-06-00B	Canopy
	Lever Assy	1	W2.5E-04GD-06B-00	Cabin
6	Auger Assy, Vertical Lifting	1	W3.5H-04BX-02-00	
7	Frame Assy, Front	1	W3.5H-04BX-07-00	Canopy
8	Frame Assy, Front	1	W2.5B-04CY-07-00P	Canopy
9	Lever Weld, Belt	1	W5.0-04Q-02A-00	
10	Frame Assy, Tension Pulley	1	W2.5B-04CM-02-00	
11	Frame Assy, Cover	1	W2.5B-04BX-08D-00	
12	Transmission Box Assy	1	W2.5B-04CY-10B-00	
13	Bolt M16X40	1	GB/T5783-86	
14	Washer 16	1	GB/T93-87	
15	Nut M16	1	GB/T6170-86	
16	Washer 16	2	GB/T97.1-85	
17	Nut M10	2	GB/T6170-86	
18	Cover Assy, Grain Guide	1	W2.5B-04BX-05-00	
19	Auger Assy, Grain Unloading	1	W2.5B-04BX-11D-00	
20	Box Assy, Upper	1	W2.5B-04BX-03-00	
21	Auger Assy, Grain Unloading	1	W2.5B-04BX-04D-00	Optional
22	Cover Assy	1	W2.5B-04BX-18D-00	Canopy
	Cover Assy	1	W2.5E-04GX-03D-00	Cabin
23	Seal Plate	1	W3.5H-04BX-04	
24	Bolt M6×16	1	GB/T5783-86	
25	Washer 6	9	GB/T96-85	
26	Washer 6	9	GB/T93-87	
27	Fixing Seat Assy	1	W2.5B-04-34-00	
28	Plate, Grain Unloading	1	W2.5B-04-27	
29	Cover Assy, Upper	1	W2.5B-04CY-13-00	Canopy
	Cover Assy, Upper	1	W2.5B-04BY-13-00	Cabin
30	Cover Assy, Right	1	W2.5B-04BX-14D-00	Canopy
	Cover Weld, Right	1	W2.5E-04GX-08D-00	Cabin
31	Frame Assy, Limiter, Belt	1	W5.0-04Q-07-00	Changchai engine
32	Frame Assy, Limiter, Belt	1	W5.0-04Q-07Q-00	Changchai engine

Grain tank Assy (W3.5H-04BX-00, W3.5H-04GX-00)

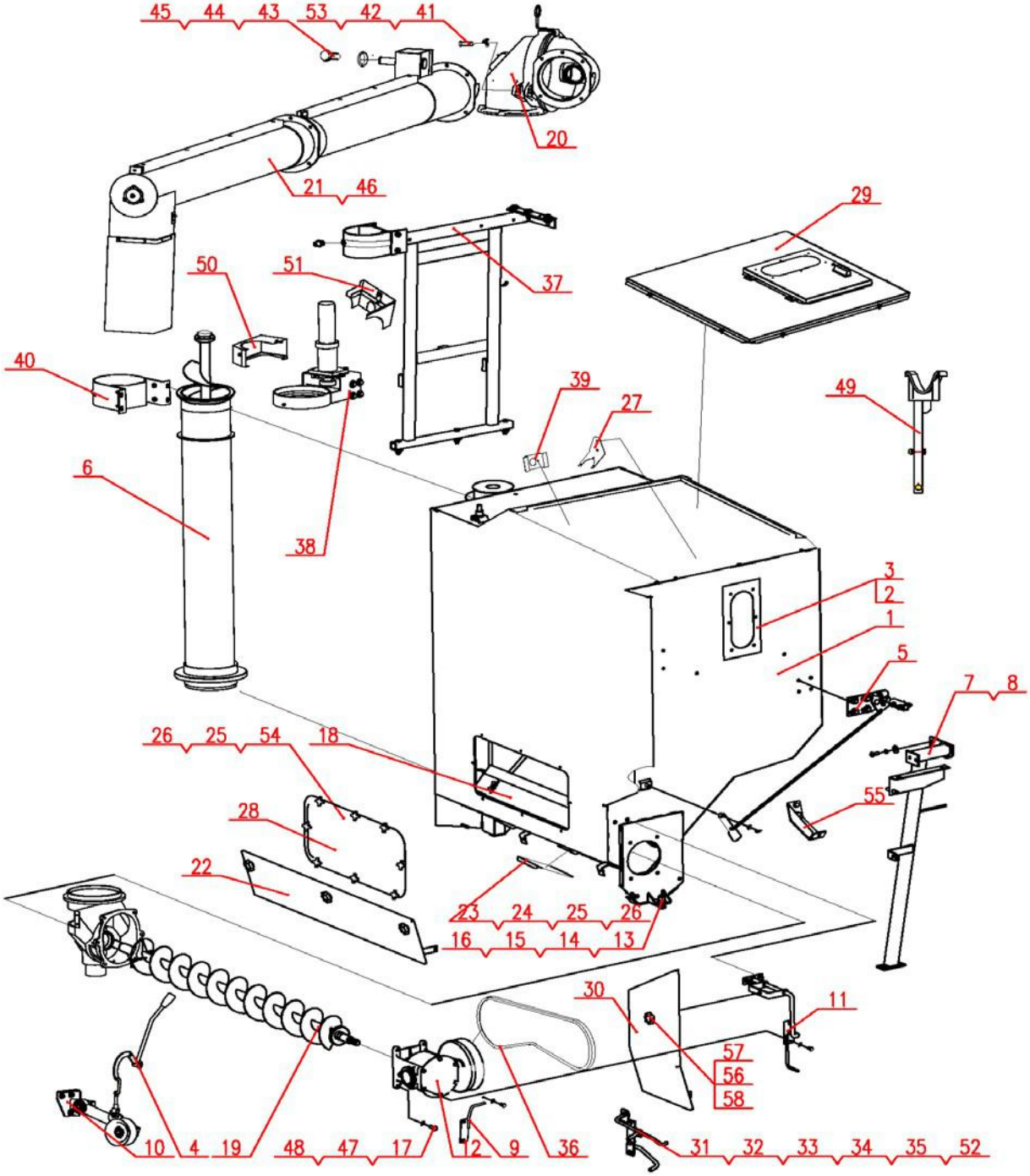

Grain Tank Assy(W3.5H-04BX-00, W3.5H-04GX-00)

NO.	Description	QTY	Part Code	Note
33	Frame Assy, Limiter, Belt	1	W2.5B-04BX-19(Y)-00D	
34	Frame Assy, Limiter, Belt	1	W2.5B-04BX-19(YG)-00D	
35	Frame Assy, Limiter, Belt	1	W5.0-04Q-07YC-00	
36	C Belt 1850	1	W2.5B-04-32	
37	Frame Assy, Rear	1	W3.5H-04BX-09-00	
38	Driving Assy, Horizontal	1	W2.5B-04BX-12-00B	
39	Frame Assy, Turn Signal	1	W2.5B-04-35-00	
40	Hoop Assy, Upper	1	W2.5B-04BX-06-00	
41	Pin Shaft B20X70	1	GB/T82-86	
42	Pin 5X40	1	GB/T91-86	
43	Bolt M8×20	1	GB/T5783-86	
44	Retaining Ring	1	W2.5B-04BX-15	
45	Washer 8	1	GB/T93-87	
46	Auger Assy, Grain Unloading	1	W2.5B-04BX-04D-00B	
47	Bolt M10X35	2	GB/T5783-86	
48	Washer 10	2	GB/T93-87	
49	Frame Assy	1	W3.5H-04GX-06-00	Canopy
	Frame Assy	1	W3.5H-04GX-07-00	Cabin
50	Cover Assy, B	1	W2.5B-04BX-16-00	
51	Cover Assy, A	1	W2.5B-04BX-17-00	
52	Frame Assy, Limiter, Belt	1	W2.5B-04-19X-00	
53	Washer 20	1	GB/T97.1-85	
54	Bolt M6×20	8	W3.5H-04BX-05-00	
55	Seat Assy, String	1	W2.5E-04GX-07-00	Cabin
56	Nut	1	W2.0-01-02-07-00	Cabin
57	Washer, Big 8	1	GB/T96-85	Cabin
58	Washer 8	1	GB/T93-87	Cabin

Grain Unloading Lifting Auger Assy (W3.5H-04BX-02-00)

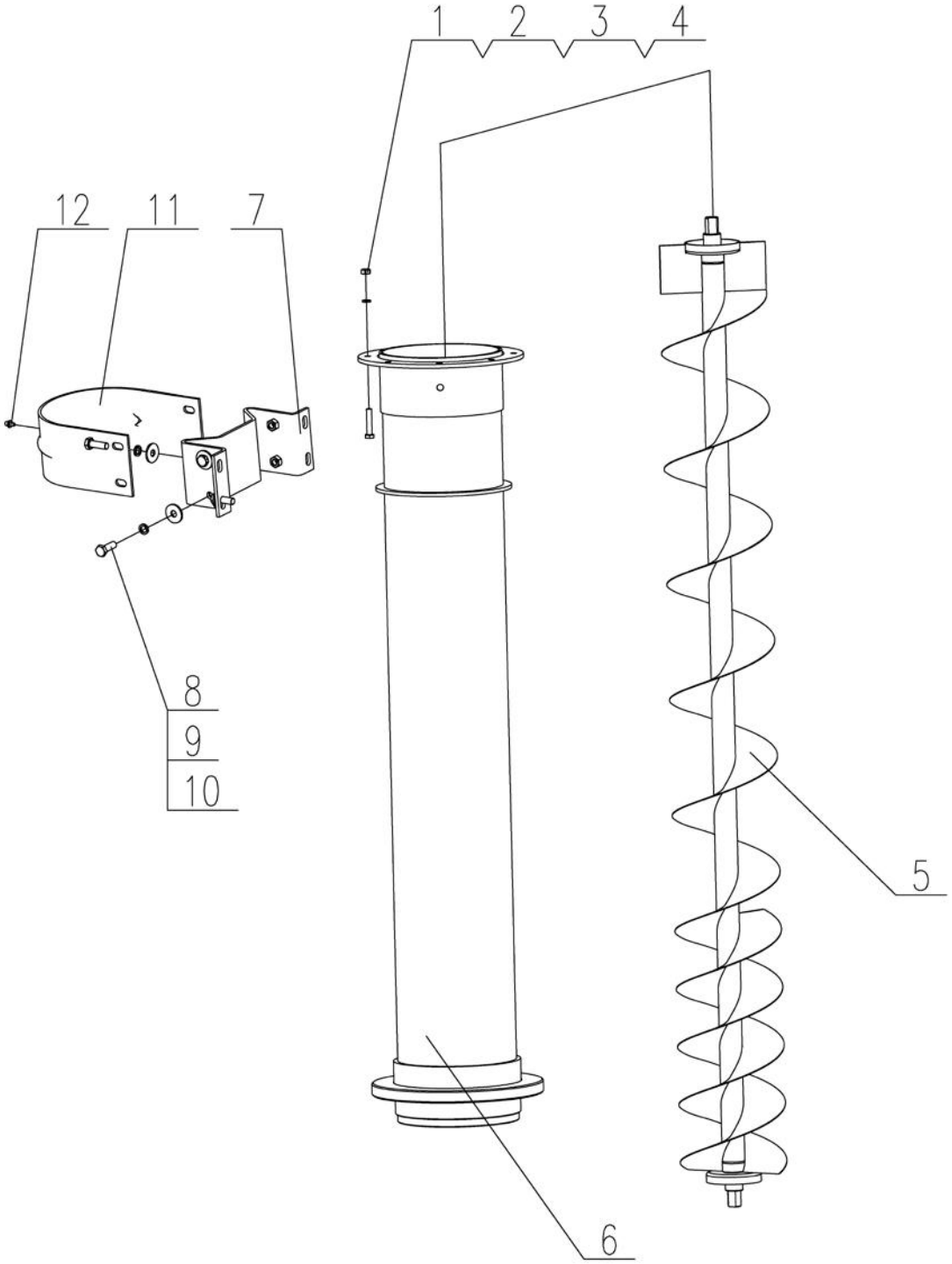

Grain Unloading Lifting Auger Assy (W3.5H-04BX-02-00)

	Description	QTY	Part Code	Note
1	Bolt M8X35	7	GB/T5783-86	
2	Washer 8	8	GB/T93-87	
3	Nut M8	7	GB/T6170-86	
4	Bolt M8X25	1	GB/T5783-86	
5	Housing Weld, Lifting Auger	1	W3.5H-04BX-02-02-00	
6	Auger Weld, Vertical Lifting	1	W3.5H-04BX-02-01-00	
7	Hoop Weld, Inner	1	W2.5B-04BX-06-01-00	
8	Bolt M10X30	4	GB/T5783-86	
9	Washer 10	8	GB/T93-87	
10	Washer, Plain	4	WD-150.01.26-01	
11	Hoop, Outside	1	W2.5B-04BX-06-02	
12	Oil Cup M6	1	GB/T1152-89	

Unloading Handle Assy (W3.5H-04BX-03-00)

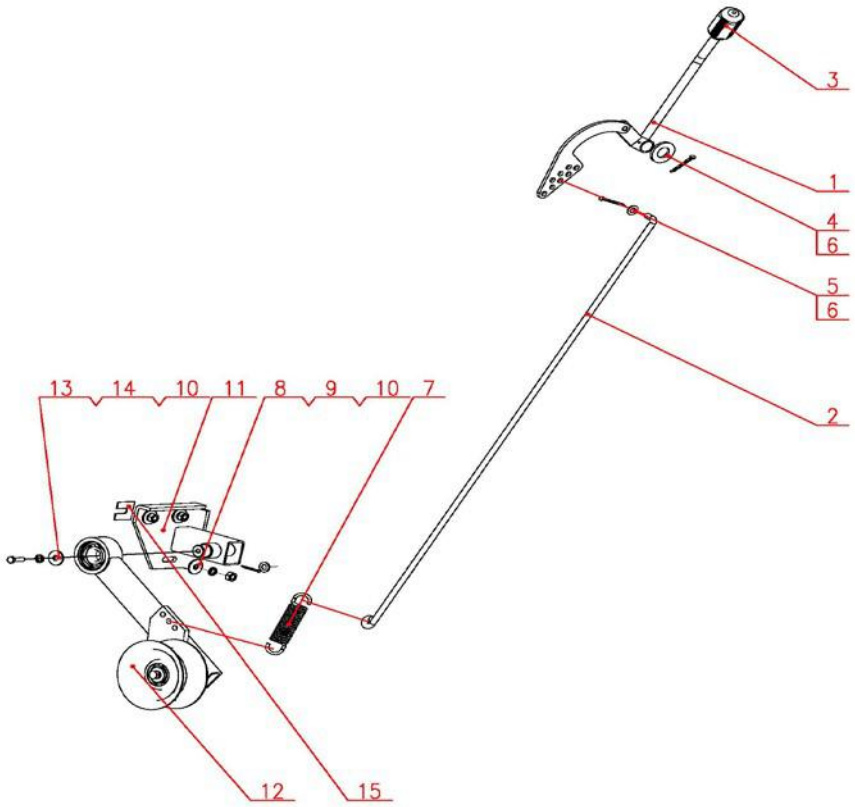

NO.	Description	QTY	Part Code	Note
1	Handle Rod Assy, Grain Unloading	1	W2.5B-04CY-12B-01-00	
2	Connecting Rod, Lower	1	W3.5H-04BX-03-01	
3	Clutch Lever	1	W2.5DA-07E-05-01	
4	Washer 16	1	GB/T97.1-85	
5	Washer 8	1	GB/T97.1-85	
6	Pin φ2.5x26	2	GB/T91-86	
7	Spring, Grain Unloading	1	W2.5B-04CY-12B-03	
8	Nut M8	3	GB/T6170-86	
9	Washer 8	3	GB/T96-85	
10	Washer 8	4	GB/T93-87	
11	Tension Seat Weld	1	W2.5B-04CM-02-01-00A	
12	Tension Arm Assy	1	W2.5B-04CM-02-02-00A	
13	Bolt M8X20	1	GB/T5783-86	
14	Retaining Ring	1	W2.5B-04CM-02-04	
15	Washer, Adjusting	on demand	W2.5B-04CM-02-03	

Front Frame Assy (W3.5H-04BX-07-00)

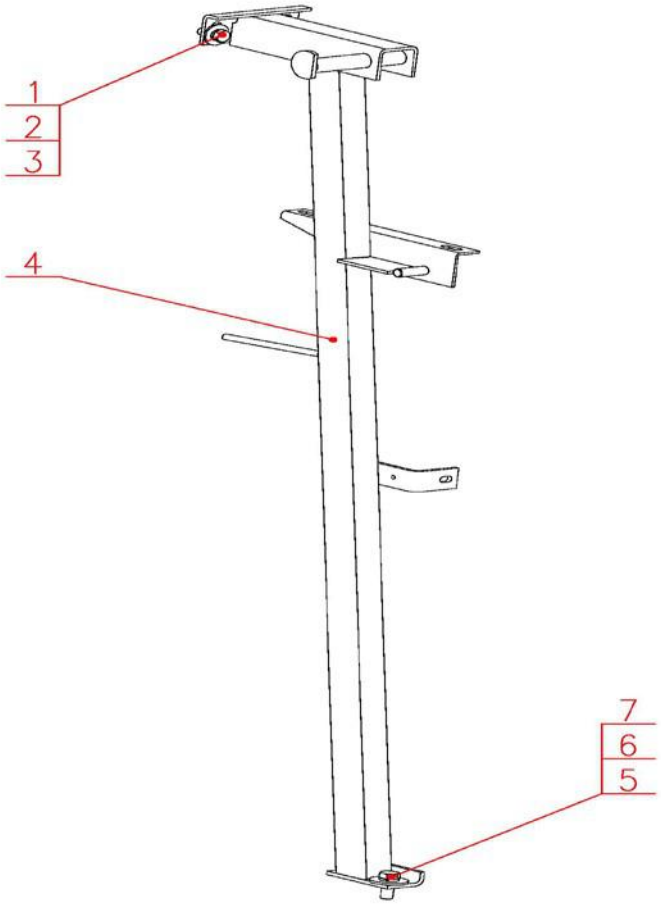

NO.	Description	QTY	Part Code	Note
1	Bolt M10X25	2	GB/T5783-86	
2	Washer, Plain	2	WD-150.01.26-01	
3	Washer 10	2	GB/T93-87	
4	Frame Assy, Front	1	W3.5H-04BX-07-01-00	
5	Bolt M12X30	1	GB/T5783-86	
6	Washer 12	1	GB/T96-85	
7	Washer 12	1	GB/T93-87	

Rear Frame Assy (W3.5H-04BX-09-00)

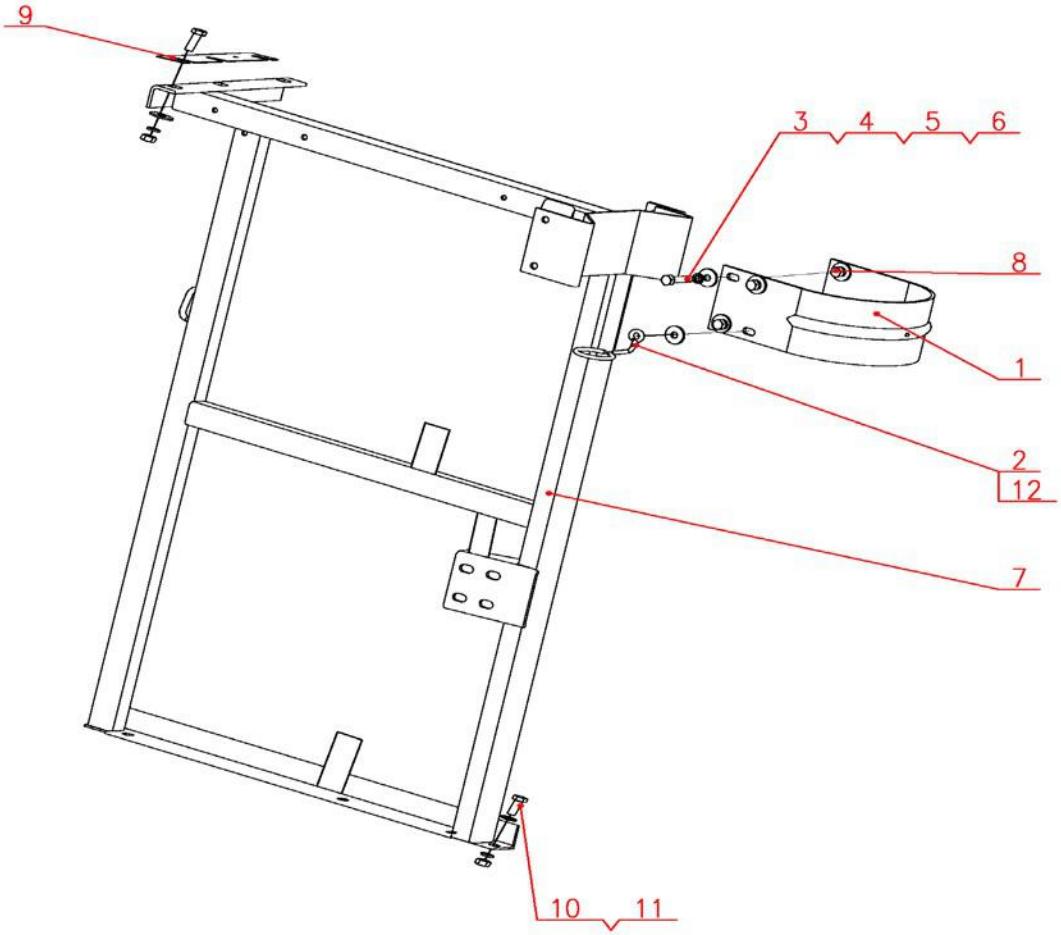

NO.	Description	QTY	Part Code	Note
1	Hoop	1	W2.5B-04BX-09-02	
2	Oil Hose Clamp	1	W2.5B-04BX-03-05	
3	Bolt M10X30	8	GB/T5783-86	
4	Washer 10	11	GB/T96-85	
5	Washer 10	17	GB/T93-87	
6	Nut M10	11	GB/T6170-86	
7	Frame Assy, Rear	1	W3.5H-04BX-09-01-00	
8	Washer, Plain	2	WD-150.01.26-01	
9	Washer, Adjusting	on demand	W2.5B-04-03-03	
10	Bolt M10X25	4	GB/T5783-86	
11	Washer 10	4	GB/T97.1-85	
12	Bolt M10X35	1	GB/T5783-86	

Support Assy (W3.5H-04GX-06-00)

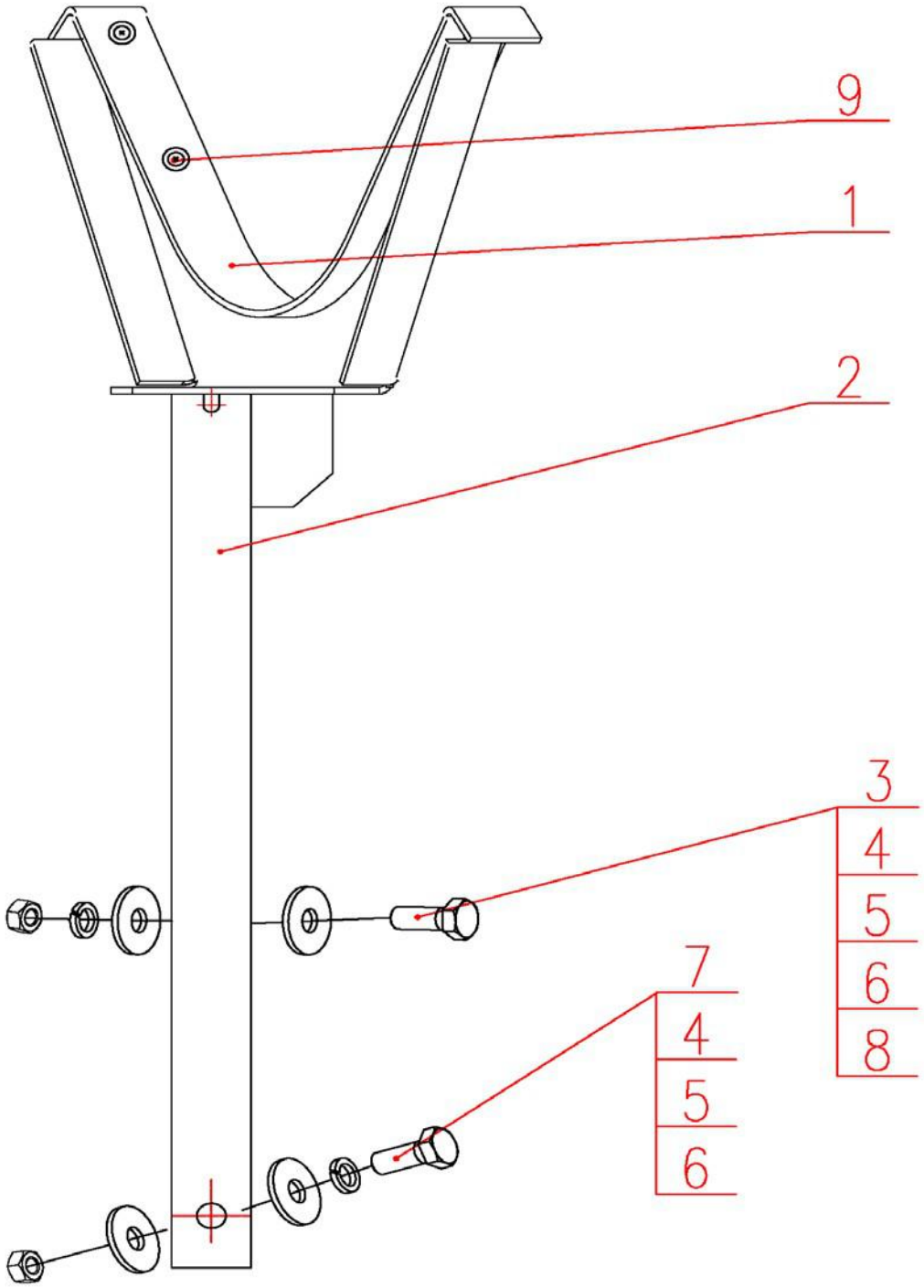

Support Assy (W3.5H-04GX-06-00)

NO.	Description	QTY	Part Code	Note
1	Rubber	1	W2.5B-04BX-07-05	
2	Support Weld	1	W3.5H-04GX-06-01-00	
3	Bolt M10X55	1	GB/T5782-86	
4	Washer 10	2	GB/T93-87	
5	Washer 10	3	GB/T96-85	
6	Nut M10	2	GB/T6170-86	
7	Bolt M10X85	1	GB/T5782-86	
8	Washer 10	1	GB/T97.1-85	
9	Bolt 7	9		

Lever Assy (W2.5B-04CY-06-00B)

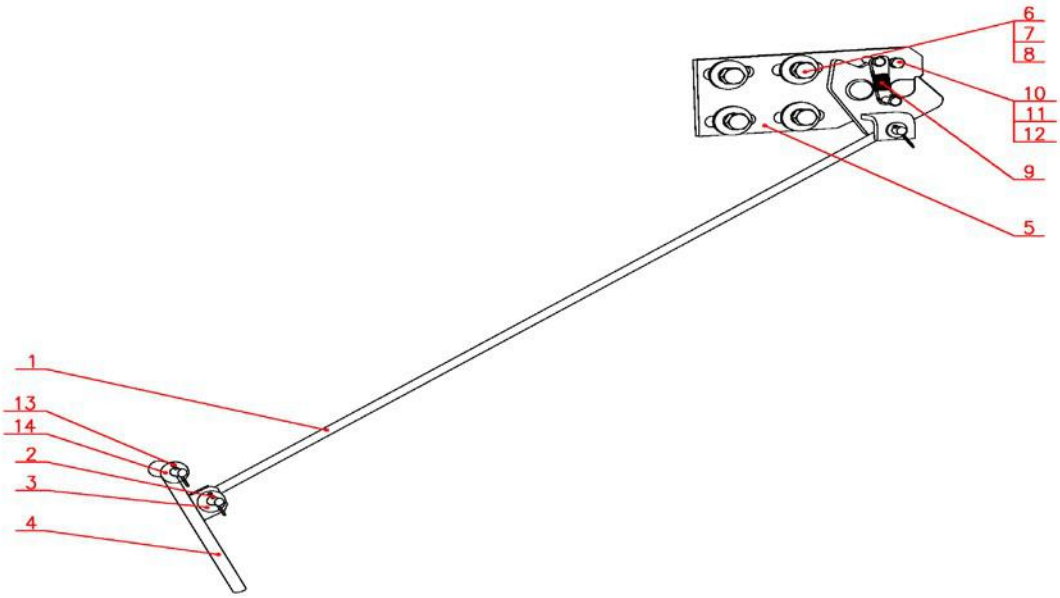

NO.	Description	QTY	Part Code	Note
1	Lever	1	W2.5B-04CY-06-02	
2	Pin 2×22	2	GB/T91-86	
3	Washer 8	2	GB/T97.1-85	
4	Handle Weld	1	W2.5B-04CY-06-01-00	
5	Plate Assy	1	W2.0B-04E-06-02-00	
6	Washer 10	4	GB/T93-87	
7	Washer, Big 10	4	GB/T96-85	
8	Bolt M10×25	4	GB/T5783-86	
9	Tension Spring	1	W2.5B-04-06-05	
10	Nut M6	1	GB/T6170-86	
11	Washer 6	1	GB/T93-87	
12	Bolt M6×16	1	GB/T5783-86	
13	Pin 3.2×24	1	GB/T91-86	
14	Washer 10	1	GB/T97.1-85	

Cover Frame Assy (W2.5B-04BX-08D-00)

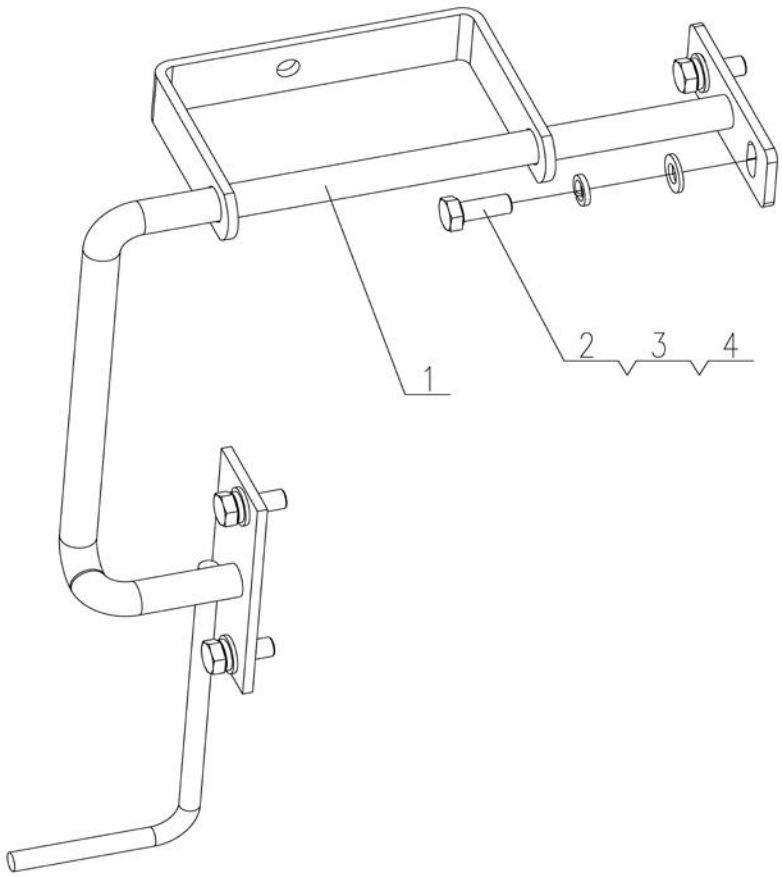

NO.	Description	QTY	Part Code	Note
1	Cover Frame Assy	1	W2.5B-04BX-08D-01-00	
2	Bolt M8×20	4	GB/T5783-86	
3	Washer 8	4	GB/T93-87	
4	Washer 8	4	GB/T97.1-85	

Transmission Box Assy (W2.5B-04CY-10B-00)

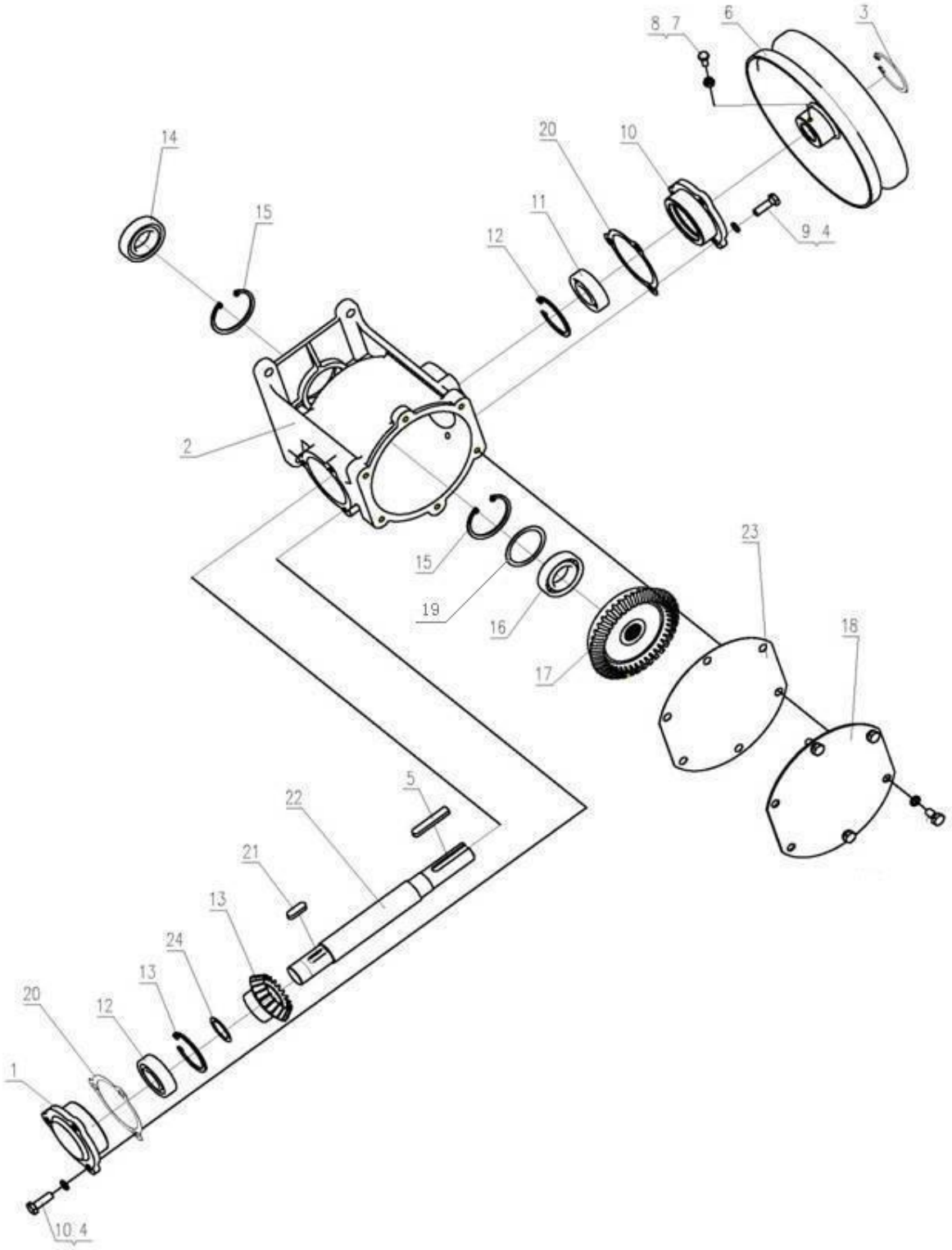

Transmission Box Assy (W2.5B-04CY-10B-00)

NO.	Description	QTY	Part Code	Note
1	Bearing Seat	1	W2.5B-04-10-04	
2	Transmission Box	1	W2.5B-04CY-10-01	
3	Circlip for Shaft 24	1	GB/T894.2-86	
4	Washer 8	12	GB/T93-87	
5	Key A8X50	1	GB/T1096-79	
6	Belt Pulley Weld	1	W2.5B-04-10-09-00	
7	Bolt M8X16	1	GB/5783-86	
8	Nut M8	1	GB/6170-86	
9	Bolt M8X25	6	GB/T5783-86	
10	Bearing Seat	1	W2.5B-04-10-03	
11	Bearing 6205-RS	2	GB/T276-94	
12	Retaining Ring for Bore 52	2	GB/T893.1-86	
13	Bevel Gear	1	W2.5B-04-10-06	
14	Bearing 6006-2RS	1	GB/T276-94	
15	Retaining Ring for Bore 55	2	GB/T893.1-86	
16	Bearing 6006-RS	1	GB/T276-94	
17	Bevel Gear	1	W2.5B-04-10-02	
18	Cover	1	W2.5B-04-10-07	
19	Washer, Adjusting B	on demand	W2.0B-04E-15-06	
20	Washer, Adjusting	on demand	W2.5B-04-10-08	
21	Key 8X25	1	GB/T1096-79	
22	Gear Shaft	1	W2.5B-04CY-10B-05	
23	Seal Plate	1	W2.5B-04-10-11	
24	Washer, Adjusting Ⅱ	on demand	W2.5B-04-10-10	

Cover Assy

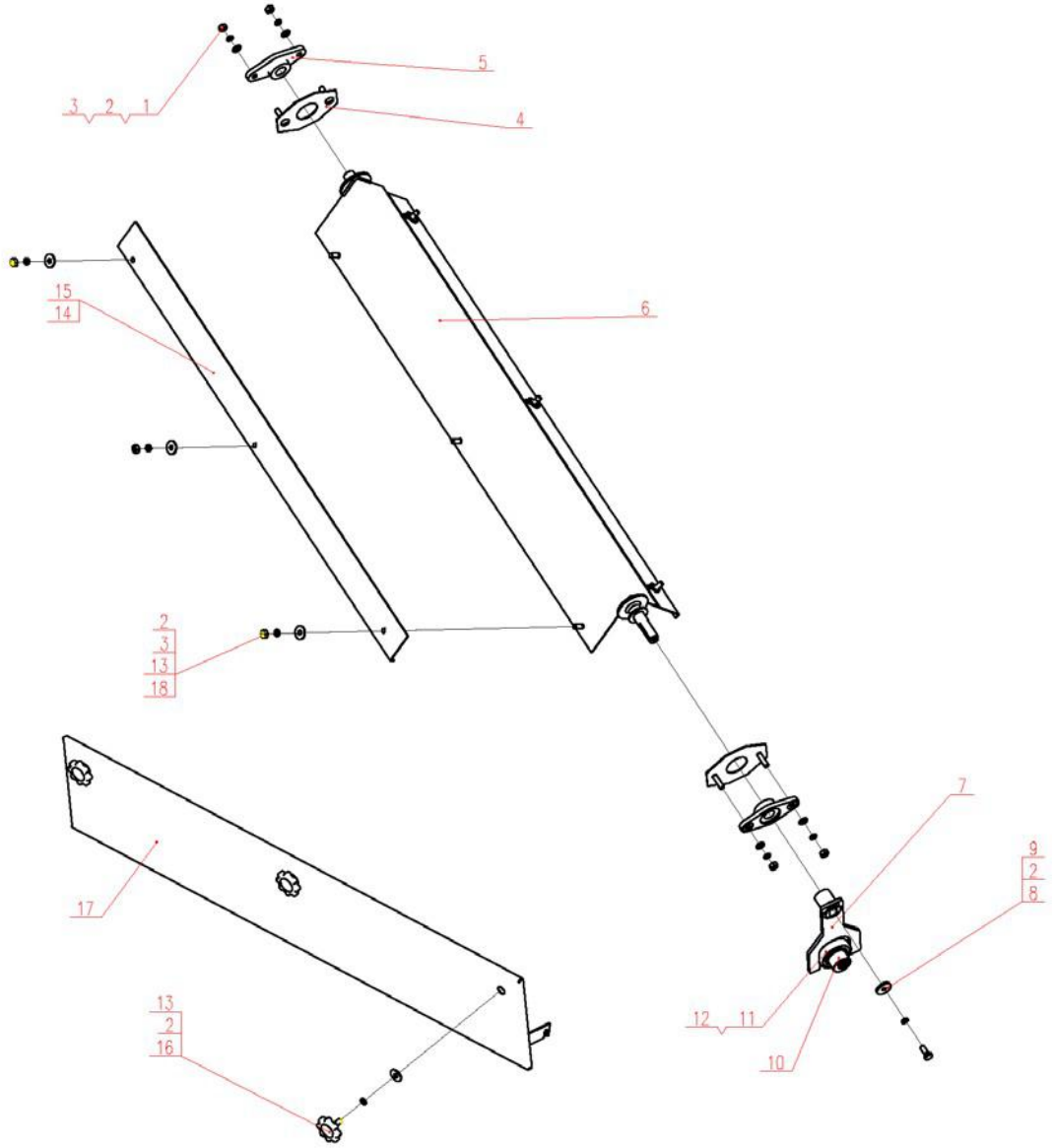

Grain Vibrator Assy

NO.	Description	QTY	Part Code	Note
1	Washer 8	4	GB/T97.1-85	
2	Washer 8	14	GB/T93-87	
3	Nut M8	10	GB/T6170-86	
4	Baffle Weld	2	W2.5B-04CD-05-05-00	
5	Nylon Sleeve	2	W2.5B-04CD-05-03	
6	Cover Weld	1	W2.5B-04BX-05-01-00	
7	Swing Rod Weld	1	W2.5B-04BX-05-02-00	
	Swing Rod Weld	1	W2.5B-04BX-05D(B)-02-00	Canopy Only
8	Retaining Ring	1	W2.5B-04CD-05-07	
9	Bolt M8×20	1	GB/T5783-86	
10	Eccentric Key Sleeve	1	W2.5B-04CD-05-02	
	Eccentric Key Sleeve	1	W2.5B-04HX-21B-03	Canopy Only
11	Circlip for Shaft 35	1	GB/T894-86	
12	Bearing 6007-2RS	1	GB/T276-94	
13	Washer 8	9	GB/T96-85	
14	Washer, Adjusting	1	W2.5B-04BX-05-03	
15	Washer, Adjusting	1	W2.5B-04CD-05-06	
16	Nut	3	W2.0-01-02-07-00	
17	Cover Assy	1	W2.5B-04BX-18D-01-00	Canopy Only
	Cover Assy	1	W2.5E-04GX-03D-01-00	Cabin Only
18	Nut M8	6	GB/T62-88	Canopy Only

360° Auger Assy (W2.5B-04BX-11D-00)

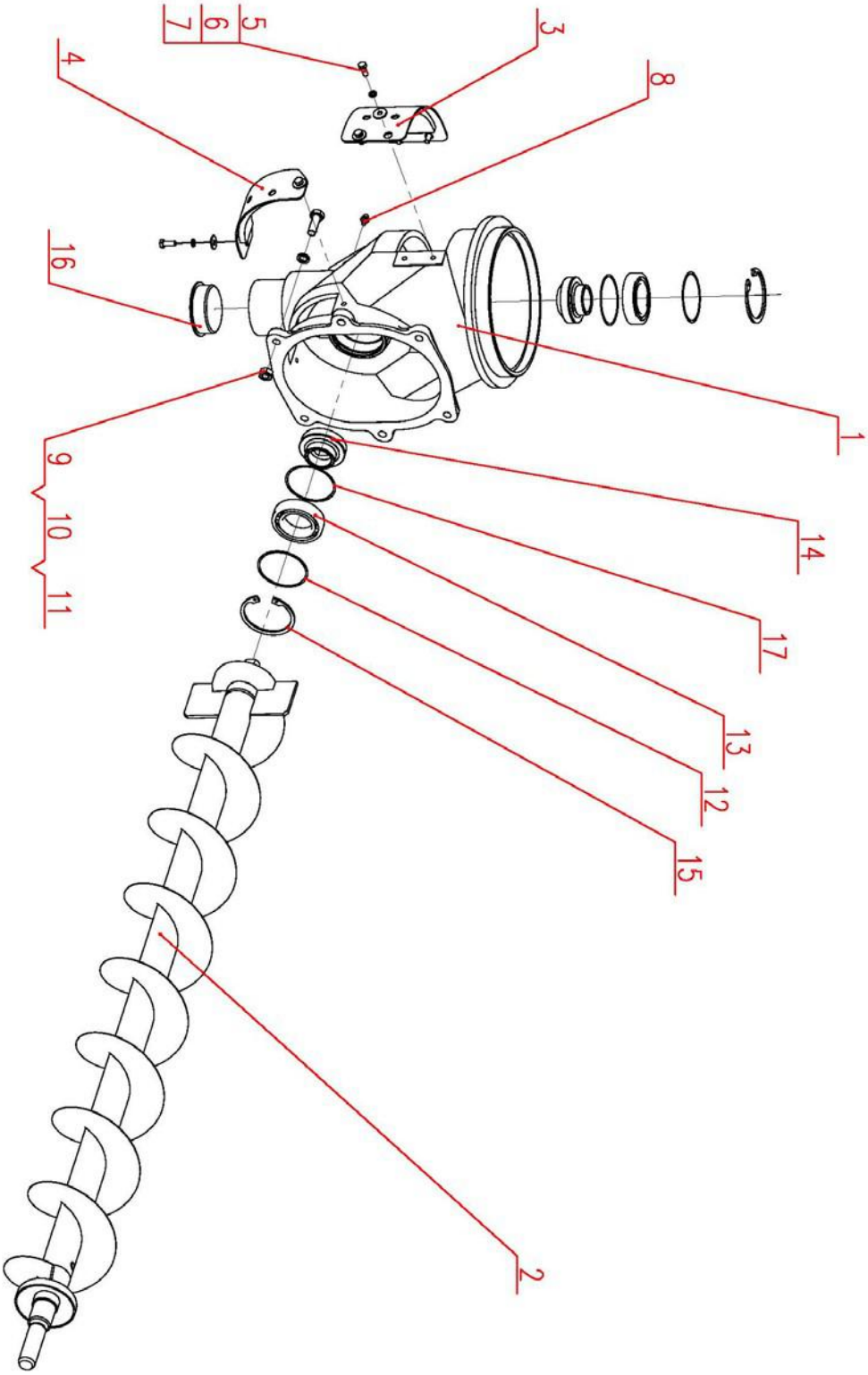

360° Auger Assy (W2.5B-04BX-11D-00)

NO.	Description	QTY	Part Code	Note
1	Lifting Housing	1	W2.5B-04BX-11D-01-01	
2	Auger Weld, Grain Unloading	1	W2.5B-04BX-11-02-00	
3	Seal Cover Weld	1	W2.5B-04BX-11-03-00	
4	Seal Cover Weld	1	W2.5B-04BX-11-04-00	
5	Washer 6	6	GB/T96-85	
6	Washer 6	6	GB/T93-87	
7	Bolt M6X12	6	GB/T5783-86	
8	Stopper	1	W2.5B-04BX-11-05	
9	Nut M10	3	GB/T6170-86	
10	Washer 10	6	GB/T93-87	
11	Bolt M10X35	4	GB/T5783-86	
12	Washer, Adjusting	on demand	W2.5B-04BX-11-01-02	
13	Bearing 6008-RS	2	GB/T276-94	
14	Bevel Gear	2	W2.5B-04BX-11-01-03	
15	Circlip for Bore 68	2	GB/T893.2-86	
16	Seal Cover	1	W2.5B-04BX-11-01-05	
17	Washer, Adjusting	on demand	W2.5B-04BX-11-01-06	

Grain Unloading Upper Housing Assy (W2.5B-04BX-03-00)

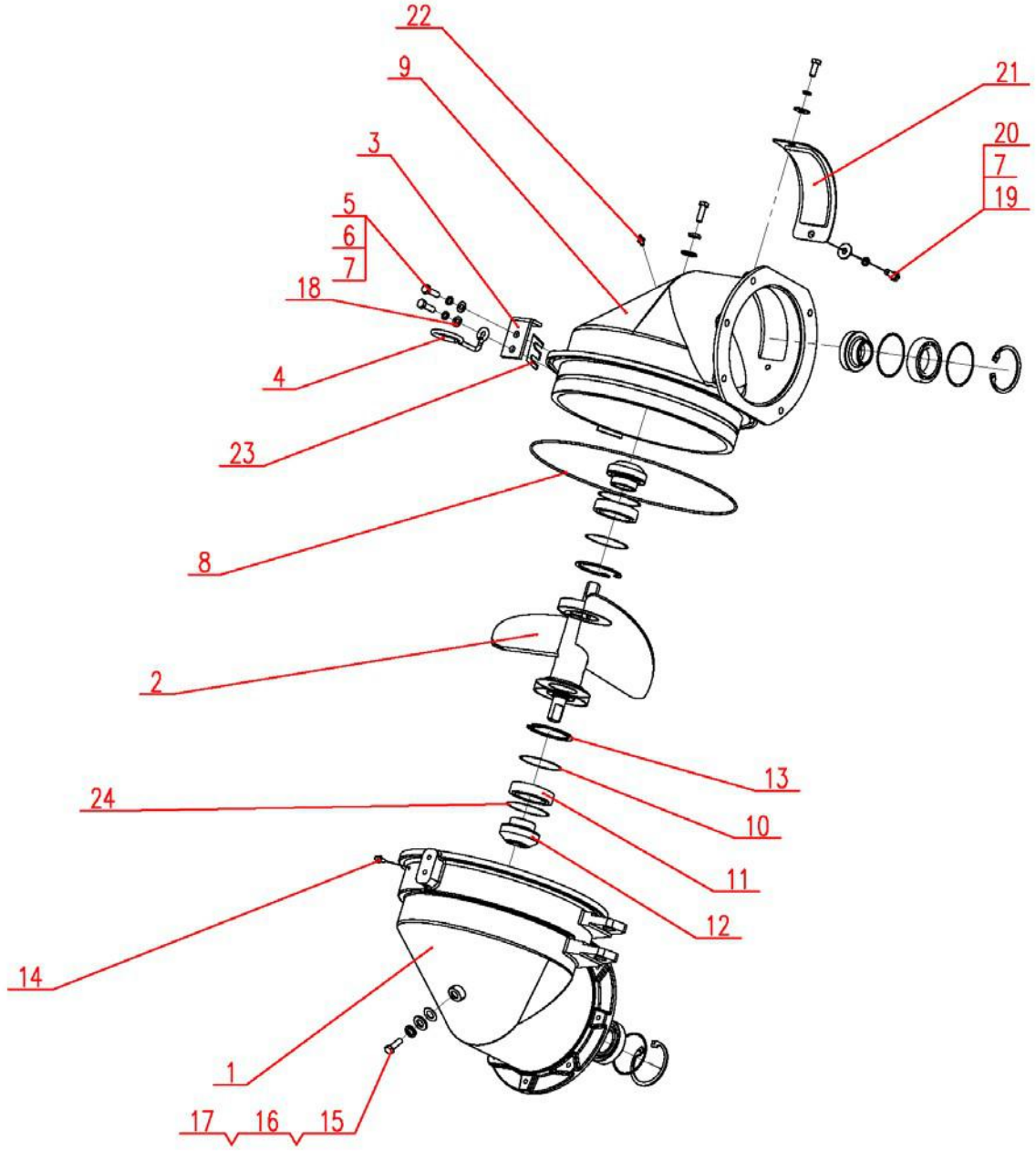

Grain Unloading Upper Housing Assy (W2.5B-04BX-03-00)

NO.	Description	QTY	Part Code	Note
1	Housing B, Upper	1	W2.5B-04BX-03-01-01	
2	Auger Weld, Middle, Short	1	W2.5B-04BX-03-03-00	
3	Plate	2	W2.5B-04BX-03-04	
4	Oil Hose Clamp	1	W2.5B-04BX-03-05	
5	Bolt M8X30	4	GB/T5783-86	
6	Washer 8	3	GB/T96-85	
7	Washer 8	6	GB/T93-87	
8	O Ring 315X5.3-G-N	1	GB/T3452.1-2005	
9	Housing A, Upper	1	W2.5B-04BX-03-02-01	
10	Washer, Adjusting	4	W2.5B-04BX-11-01-02	
11	Bearing 6008-RS	4	W2.5B-04BX-11-01-07	
12	Bevel Gear	4	W2.5B-04BX-11-01-03	
13	Circlip for Bore 68	4	GB/T893.2-86	
14	Oil Cup M6	2	GB/T1152-89	
15	Bolt M12X25	2	GB/T5783-86	
16	Washer 12	2	GB/T97.1-85	
17	Washer 12	2	GB/T93-87	
18	Washer, Plain	1	01.03C-02	
19	Bolt M8X16	2	GB/T5783-86	
20	Washer 8	2	GB/T96-85	
21	Seal Plate Weld	1	W2.5B-04BX-03-02-02-00	
22	Oil Cup M8X1	1	GB/T1152-89	
23	Washer	1	W2.5B-04BX-03-06	
24	Washer	4	W2.5B-04BX-11-01-06	

Grain Tank Cover Assy (W2.5B-04CY-13-00, W2.5B-04BY-13-00)

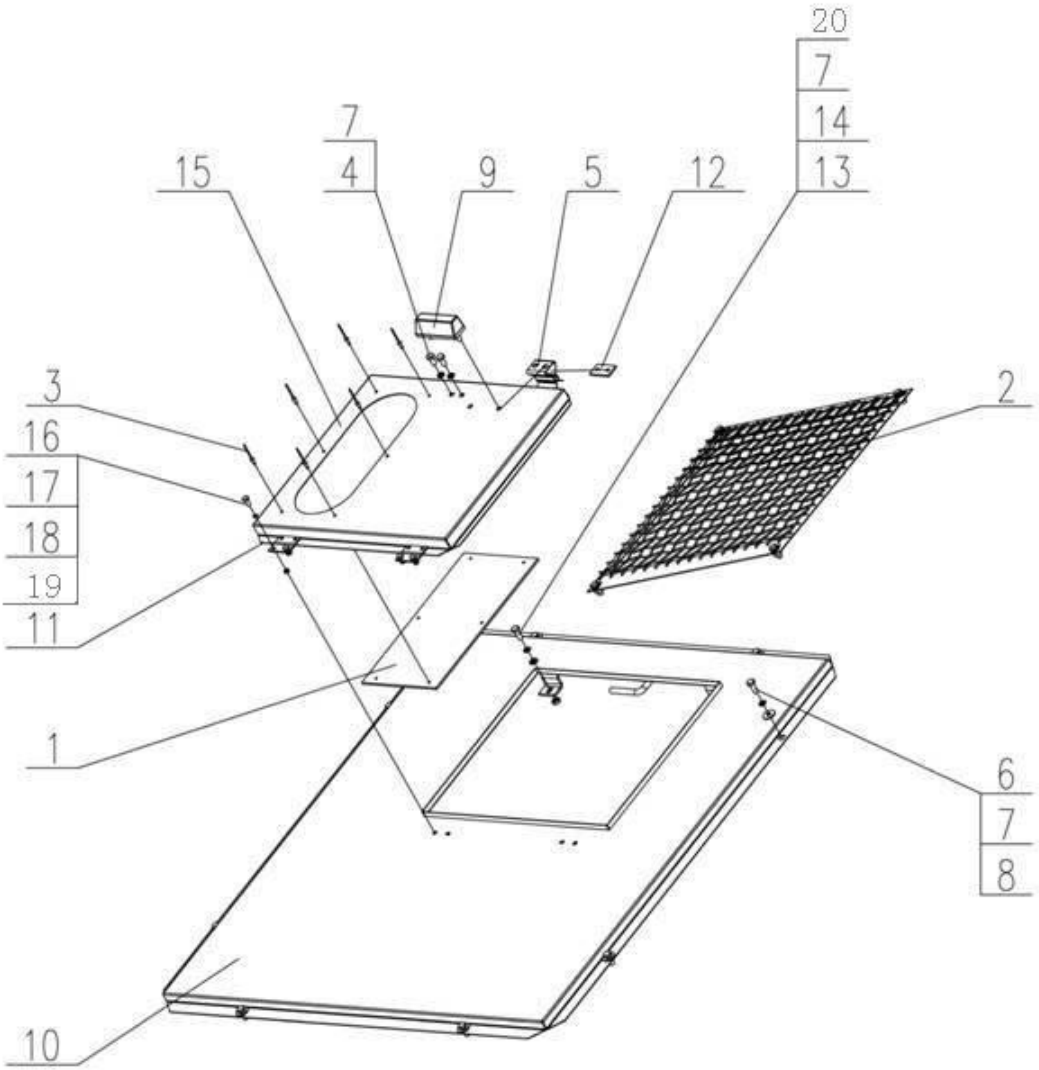

Grain Tank Cover Assy (W2.5B-04CY-13-00, W2.5B-04BY-13-00)

NO.	Description	QTY	Part Code	Note
1	Filter Cover	1	W2.5-04-02-03-07	
2	Safety Net Weld	1	W2.5B-04CY-13-03-00	
3	Rivet φ3.2×9	6	GB/T12618-1990	
4	Bolt M6×12	2	GB/T5783-86	
5	Spring Plate	1	W2.5B-04CY-13-04	
6	Washer, Big 6	8	GB/T96-85	
7	Washer 6	16	GB/T93-87	
8	Bolt M6×16	8	GB/T5783-86	
9	Handle	1	W2.5B-04CY-13-07	
10	Cover Weld, Upper	1	W2.5B-04CY-13-01-00	Canopy Only
	Cover Weld, Upper	1	W2.5B-04BY-13-01-00	Cabin Only
11	Sealing Plate	on demand	W2.5B-04CY-13-06	Canopy Only
	Sealing Plate	on demand	WD.2ZA.21-03	Cabin Only
12	Lock Plate	1	W2.5B-04CY-13-05	
13	Washer 6	8	GB/T97.1-85	
14	Nut M6	8	GB/T6170-86	
15	Cover Weld, Grain Tank	1	W2.5B-04CY-13-02-00	
16	Nut M4	4	GB/T6170-86	
17	Bolt M4×12	4	GB/T5783-86	
18	Washer 4	4	GB/T93-87	
19	Washer 6	4	GB/T97.1-85	
20	Bolt M6×20	4	GB/T5783-86	

Grain Unloading Auger Assy (W2.5B-04BX-04D-00, W2.5B-04BX-04D-00B)

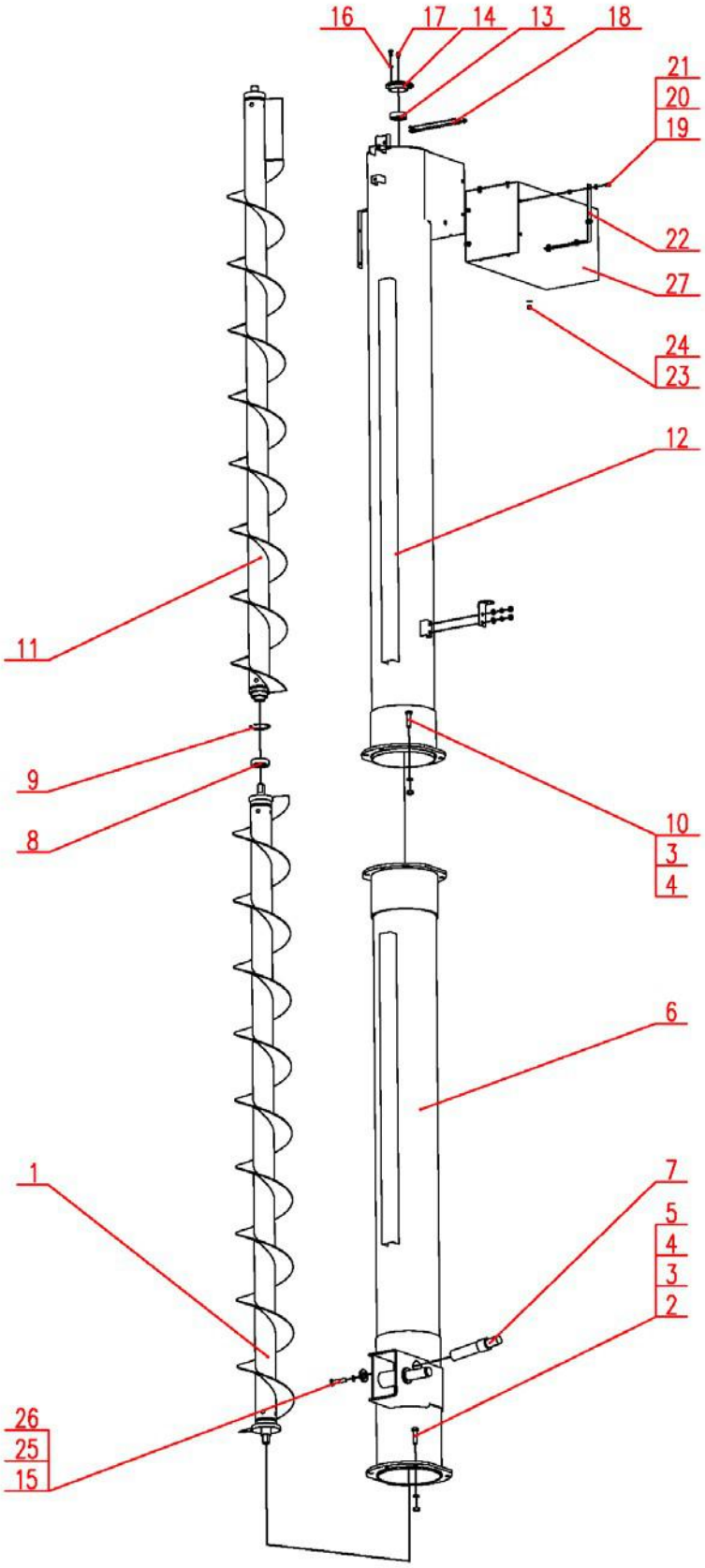

Grain Unloading Auger Assy (W2.5B-04BX-04D-00, W2.5B-04BX-04D-00B)

NO.	Description	QTY	Part Code	Note
1	Auger A, Grain Unloading	1	W2.5B-04BX-04-01-00	
2	Bolt M10×40	5	GB/T5783-86	
3	Washer 10	10	GB/T93-87	
4	Nut M10	10	GB/T6170-86	
5	Washer 10	15	GB/T97.1	
6	Housing Weld A, Grain Unloading Auger	1	W2.5B-04BX-04D-03-00	
7	Support Shaft	1	W2.5B-04BX-04D-10	
8	Bearing 6304-2RS	1	W2.5-02-02-10-16	
9	Retaining Ring for Bore 52	1	GB/T893.2-86	
10	Bolt M10×35	5	GB/T5783-86	
11	Auger B, Grain Unloading	1	W2.5B-04BX-04-02-00	
	Auger B, Grain Unloading	1	W2.5B-04BX-04B-02-00	(Unloading Auger 200)
12	Housing Weld, Grain Unloading Auger B	1	W2.5B-04BX-04-04-00	
	Housing Weld, Grain Unloading Auger B	1	W2.5B-04BX-04B-04-00	(Unloading Auger 200)
13	Bearing 6204-RS	1	GB/T276-82	
14	Cover, Bearing Seat	1	W2.0-02-10-01-04	
15	Bolt M12×25	1	GB/T5783	
16	Washer 6	11	GB/T93-87	
17	Oil Cup M6	1	GB/T1152-89	
18	Baffle Assy	1	W2.5B-04BX-04-07-00	
19	Bolt M6×16	11	GB/T5783-86	
20	Washer 6	8	GB/T97.1-85	
21	Nut M6	8	GB/T6170-86	
22	Fixing Plate	2	W2.5B-04BX-04-06	
23	Rivet φ4×12	3	GB/T12618-1990	
24	Washer	8	W2.5B-04B-09-04	
25	Washer 12	1	GB/T93	
26	Washer	1	WD.1F.12	
27	Sleeve	1	W2.5B-04BX-04B-05	

Grain Unloading Horizontal Driving Assy (W2.5B-04BX-12-00B)

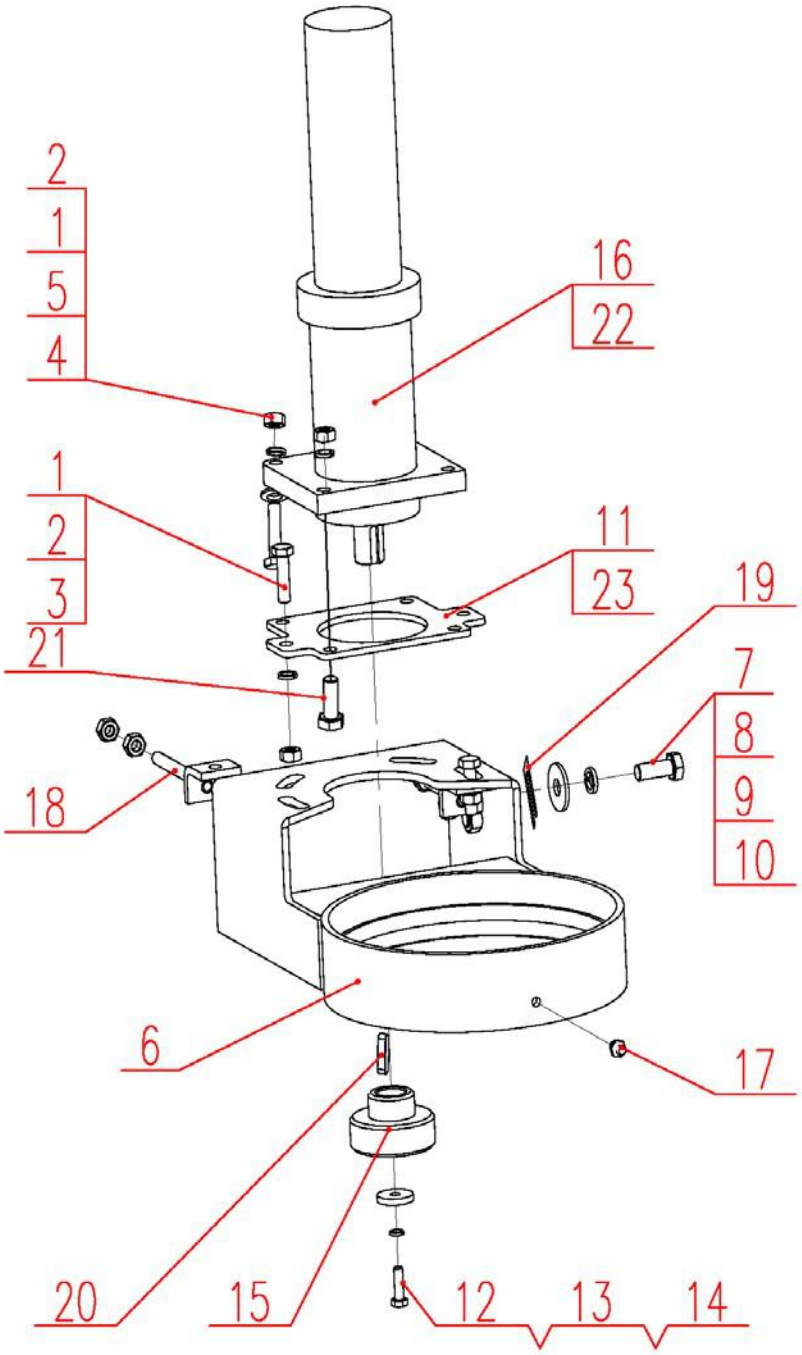

Grain Unloading Horizontal Driving Assy (W2.5B-04BX-12-00B)

NO.	Description	QTY	Part Code	Note
1	Washer 8	8	GB/T93-87	
2	Nut M8	10	GB/T6170-86	
3	Bolt M8X25	2	GB/T5783-86	
4	Bolt M8X35	2	GB/T5783-86	
5	Washer 8	6	GB/T96-85	
6	Installation Seat Weld	1	W2.5B-04BX-12-01-00	
7	Bolt M10X35	4	GB/T5783-86	
8	Washer	8	W2.5B-04BX-12-08	
9	Washer 10	8	GB/T93-87	
10	Nut M10	4	GB/T6170-86	
11	Transition Plate	1	W2.5B-04BX-12-02	
12	Retaining Ring	1	W2.5B-04BX-12-05	
13	Bolt M6X20	1	GB/T5783-86	
14	Washer 6	1	GB/T93-87	
15	Active Gear	1	W2.5B-04BX-12-06	
16	Motor Module Assy	1	W2.5B-04BX-12-03B-00	
17	Oil Cup M6	1	GB/T1152-89	
18	Lever Weld	2	W2.5B-04BX-12-04-00	
19	Washer, Adjusting	on demand	W2.5B-04BX-12-09	
20	Key C6X25	1	GB/T1096-79	
21	Bolt M8X30	2	GB/T5783-86	
22	Motor	1	W2.5B-04BX-12-03B-01	
23	Washer, Adjusting	1	W2.5B-04BX-12-10	

Cover Assy A (W2.5B-04BX-17-00)

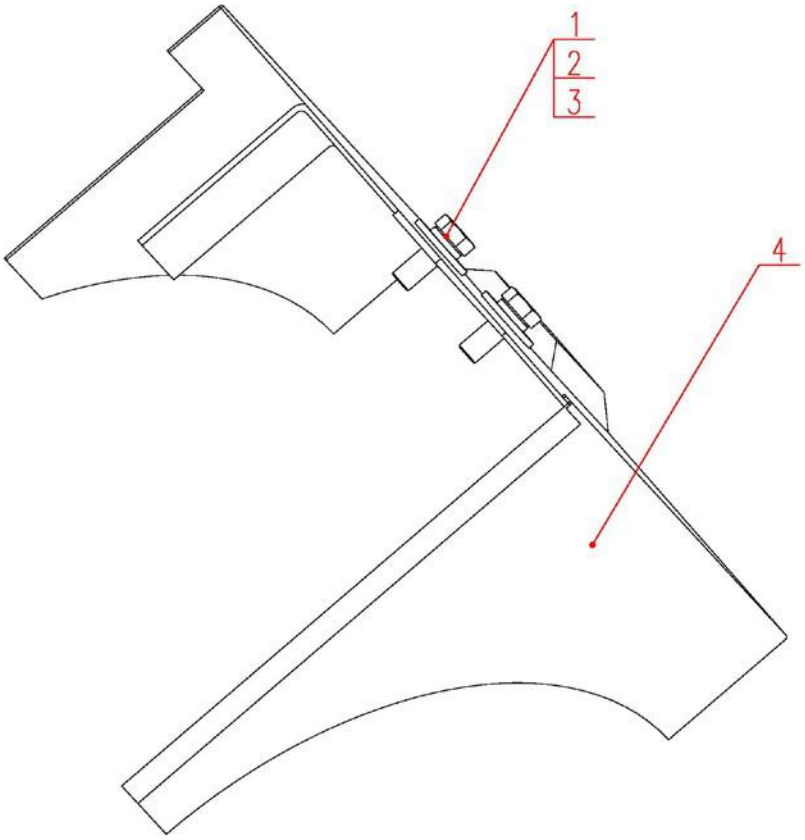

NO.	Description	QTY	Part Code	Note
1	Bolt M6X18	2	GB/T5783-86	
2	Washer 6	2	GB/T96-85	
3	Washer 6	2	GB/T93-87	
4	Cover Weld A	1	W2.5B-04BX-17-01-00	

Cover Assy B (W2.5B-04BX-16-00)

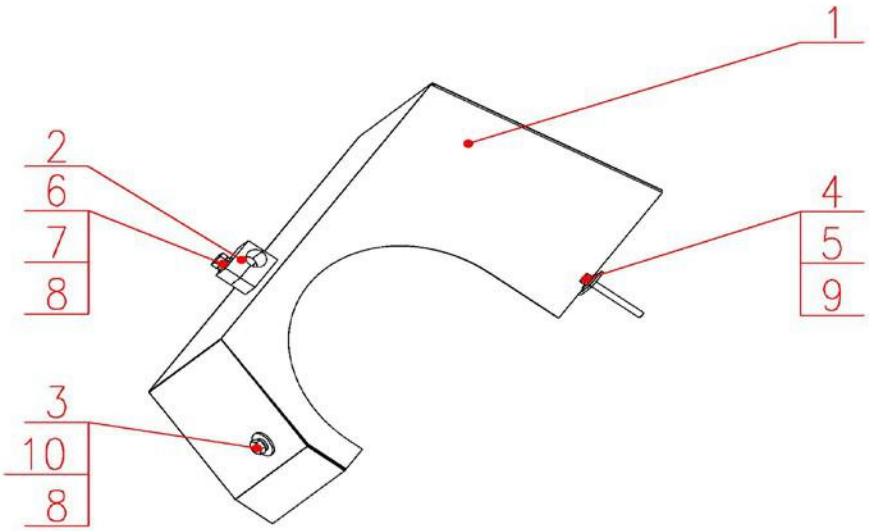

NO.	Description	QTY	Part Code	Note
1	Cover Weld B	1	W2.5B-04BX-16-01-00	
2	Nylon Clamp	2	W2.5B-04BX-12-07	
3	Bolt M8×20	1	GB/T5783-86	
4	Washer 6	1	GB/T93-87	
5	Washer, Big 6	1	GB/T96-85	
6	Bolt M8×50	1	GB/T5782-86	
7	Washer 8	1	GB/T97.1-85	
8	Washer 8	2	GB/T93-87	
9	Bolt M6×16	1	GB/T5783-86	
10	Washer, Big 8	1	GB/T96-85	

Fixing Seat Assy (W2.5B-04-34-00)

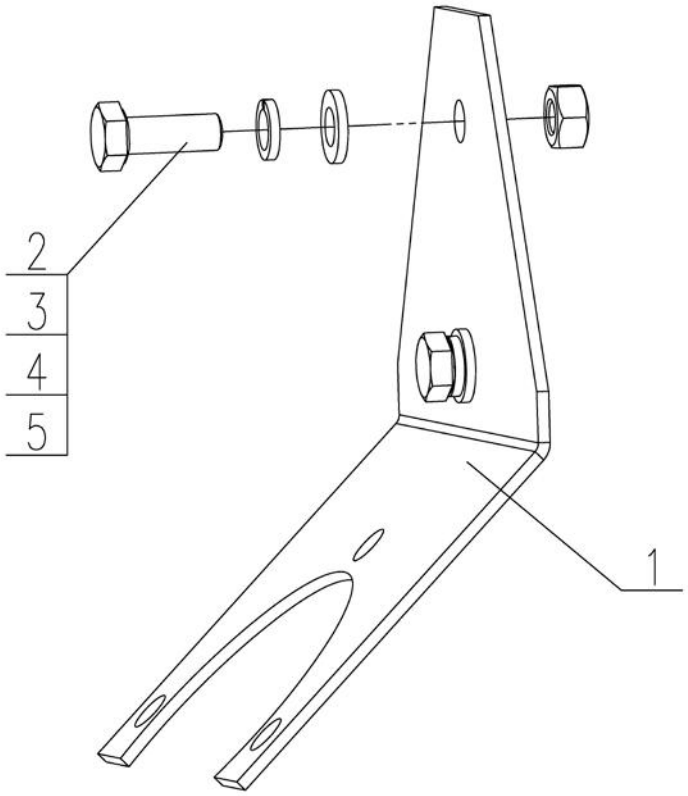

NO.	Description	QTY	Part Code	Note
1	Fixing Plate	1	W2.5B-04-34-01	
2	Bolt M6×16	2	GB/T5783-86	
3	Washer 6	2	GB/T93-87	
4	Washer 6	2	GB/T97.1-85	
5	Nut M6	2	GB/T6170-86	

Connecting Plate Assy (W2.5E-04GX-07-00)

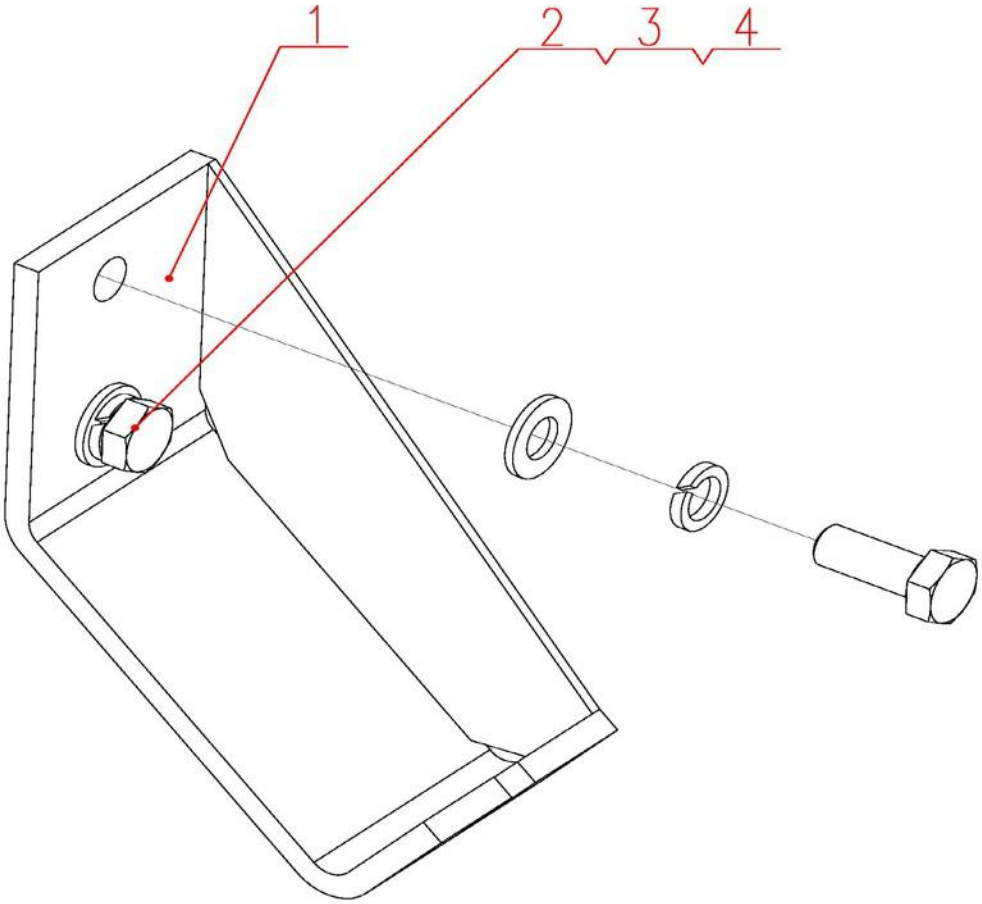

NO.	Description	QTY	Part Code	Note
1	String Seat Weld	1	W2.5E-04GX-07-01-00	
2	Washer 10	2	GB/T93-87	
3	Washer 10	2	GB/T97.1-85	
4	Bolt M10×25	2	GB/T5783-86	

Right Cover (W2.5B-04BX-14D-00, W2.5E-04GX-08D-00)

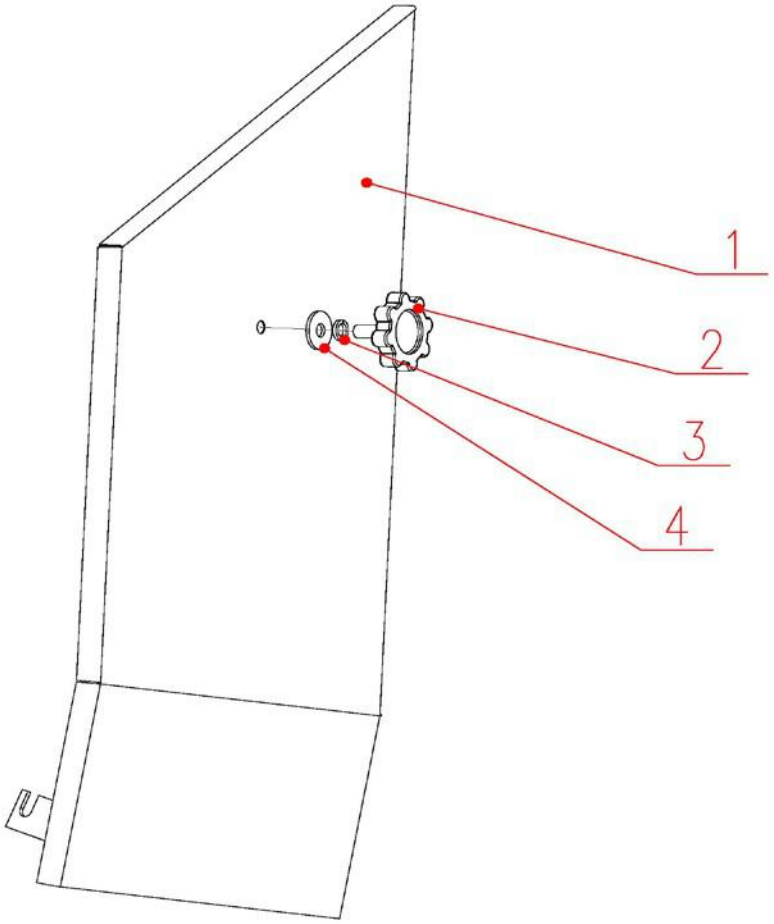

NO.	Description	QTY	Part Code	Note
1	Cover Assy, Right	1	W2.5B-04BX-14D-01-00	Canopy Only
	Cover Assy, Right	1	W2.5E-04GX-08D-00	Cabin Only
2	Nut	1	W2.0-01-02-07-00	
3	Washer, Big 8	1	GB/T96-85	
4	Washer 8	1	GB/T93-87	

Limit Belt Holder Assy (W5.0-04Q-07-00)

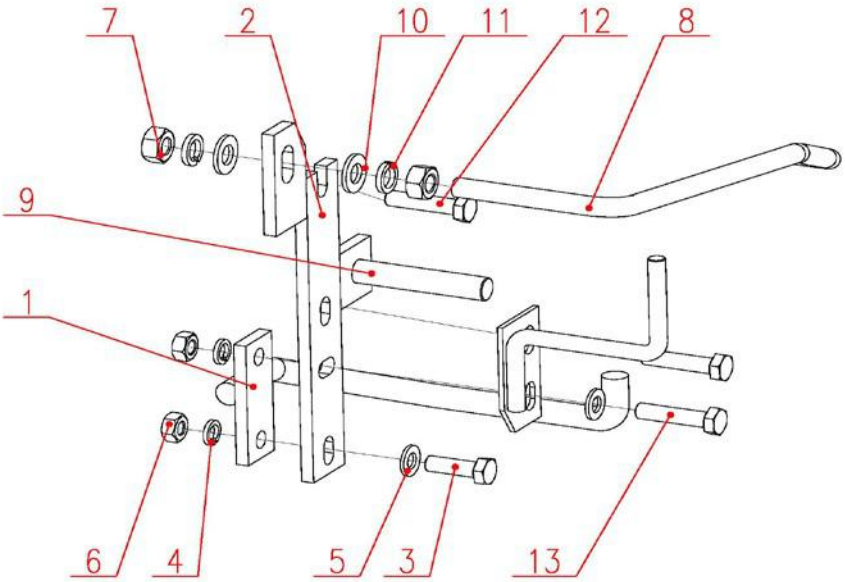

NO.	Description	QTY	Part Code	Note
1	Limit Belt Holder Weld	1	W5.0-04Q-07-01-00	
2	Frame Assy, Lower	1	W2.5B-04-19-02-00	
3	Bolt M8X25	1	GB/T5783-86	
4	Washer 8	2	GB/T93-87	
5	Washer 8	2	GB/T97.1-85	
6	Nut M8	2	GB/T6170-86	
7	Nut M10	2	GB/6170-86	
8	Steel Bar, Pressing Belt	1	W2.0A-04-20-03	
9	Plate Assy	1	W5.0-04Q-07-02-00	
10	Washer 10	2	GB/T97.1-85	
11	Washer 10	2	GB/T93-87	
12	Bolt M8X35	2	GB/T5783-86	
13	Bolt M8X30	1	GB/T5783-86	

Limit Belt Holder Assy (W5.0-04Q-07Q-00)

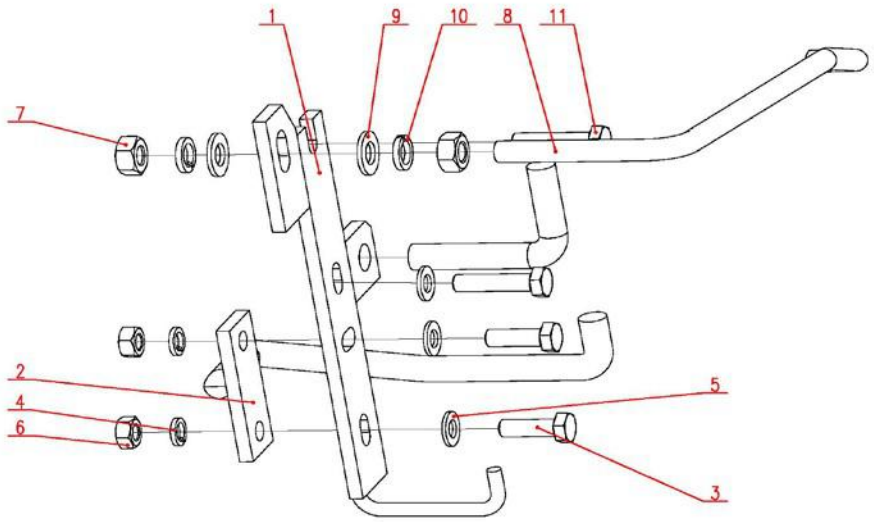

NO.	Description	QTY	Part Code	Note
1	Limit Belt Holder Weld	1	W5.0-04Q-07Q-01-00	
2	Frame Assy, Lower	1	W2.5B-04-19(Q)-02-00	
3	Bolt M8X25	2	GB/T5783-86	
4	Washer 8	2	GB/T93-87	
5	Washer 8	2	GB/T97.1-85	
6	Nut M8	2	GB/T6170-86	
7	Nut M10	2	GB/6170-86	
8	Steel Bar, Pressing Belt	1	W2.0A-04-20-03	
9	Washer 10	2	GB/T97.1-85	
10	Washer 10	2	GB/T93-87	
11	Bolt M8X35	2	GB/T5783-86	

Limit Belt Holder Assy (W5.0-04Q-07YC-00)

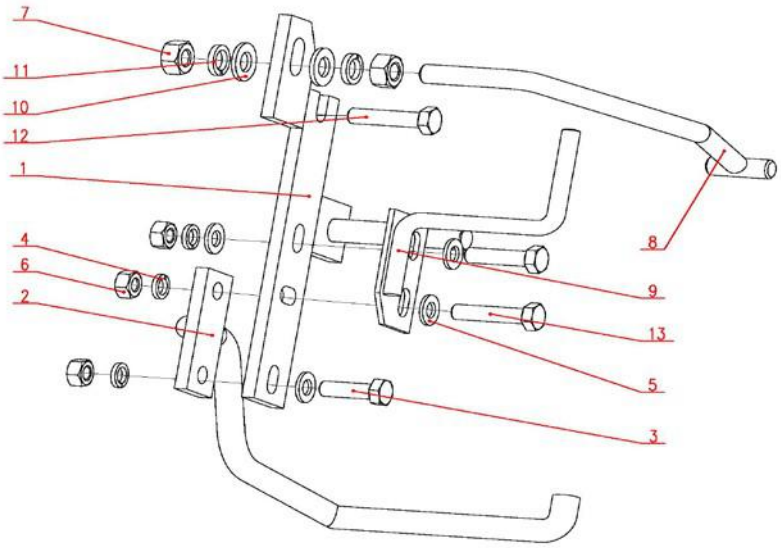

NO.	Description	QTY	Part Code	Note
1	Limit Belt Holder Weld	1	W5.0-04Q-07-01-00	
2	Frame Assy, Lower	1	W2.5B-04-19YC-02-00	
3	Bolt M8X25	1	GB/T5783-86	
4	Washer 8	2	GB/T93-87	
5	Washer 8	2	GB/T97.1-85	
6	Nut M8	2	GB/T6170-86	
7	Nut M10	2	GB/6170-86	
8	Steel Bar, Pressing Belt	1	W2.5B-04-19YC-04-00	
9	Plate Assy	1	W5.0-04Q-07-02-00	
10	Washer 10	2	GB/T97.1-85	
11	Washer 10	2	GB/T93-87	
12	Bolt M8X35	2	GB/T5783-86	
13	Bolt M8X30	1	GB/T5783-86	

Limit Belt Holder Assy (W2.5B-04BX-19(YG)-00D)

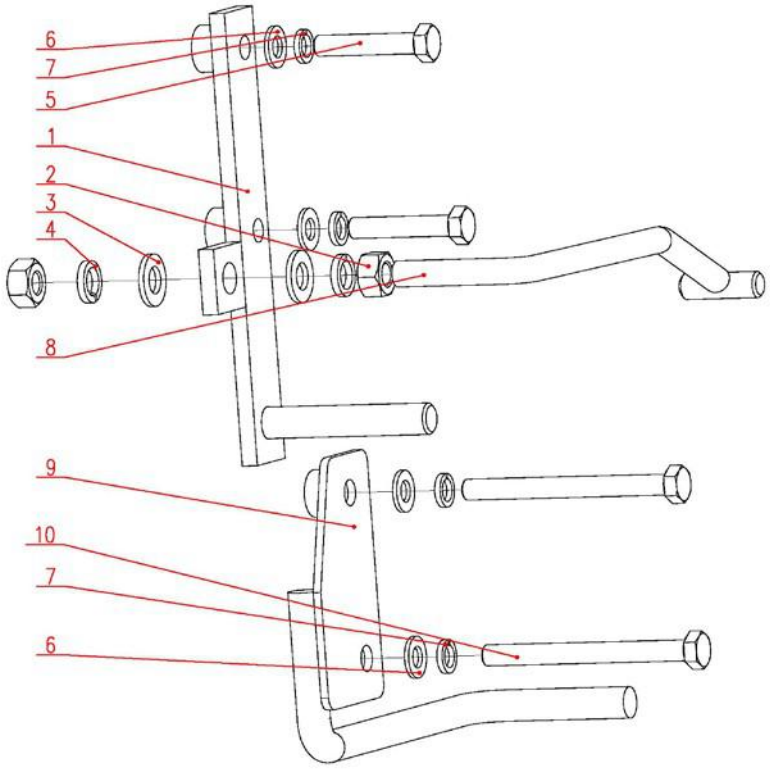

NO.	Description	QTY	Part Code	Note
1	Limit Belt Holder Weld	1	W2.5B-04BX-19(YG)-01D-00	
2	Nut M10	2	GB/6170-86	
3	Washer 10	2	GB/T97.1-85	
4	Washer 10	2	GB/T93-87	
5	Bolt M8X40	2	GB/T5783-86	
6	Washer 8	4	GB/T97.1-85	
7	Washer 8	4	GB/93-87	
8	Steel Bar Weld, Pressing Belt	1	W2.5B-04BX-19(YG)-02D-00	
9	Frame Assy, Lower	1	W2.5B-04BX-19(YG)-03D-00	
10	Bolt M8X80	2	GB/T5782-86	

Limit Belt Holder Assy (W2.5B-04BX-19(Y)-00D)

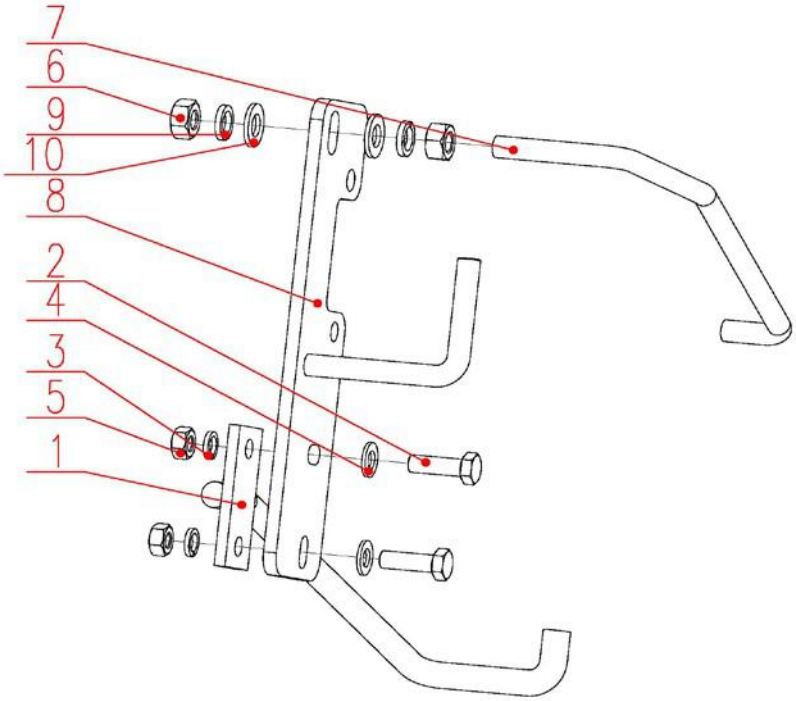

NO.	Description	QTY	Part Code	Note
1	Frame Assy, Lower	1	W2.5B-04-19(Y)-02-00	
2	Bolt M8X25	2	GB/T5783-86	
3	Washer 8	2	GB/T93-87	
4	Washer 8	2	GB/T97.1-85	
5	Nut M8	2	GB/T6170-86	
6	Nut M10	2	GB/6170-86	
7	Steel Bar, Pressing Belt	1	W2.5B-04-19(Y)-03	
8	Limit Belt Holder Weld	1	W2.5B-04BX-19(Y)-01D-00	
9	Washer 10	2	GB/T93-87	
10	Washer 10	2	GB/T97.1-85	

Limit Belt Holder Assy (W2.5B-04-19X-00)

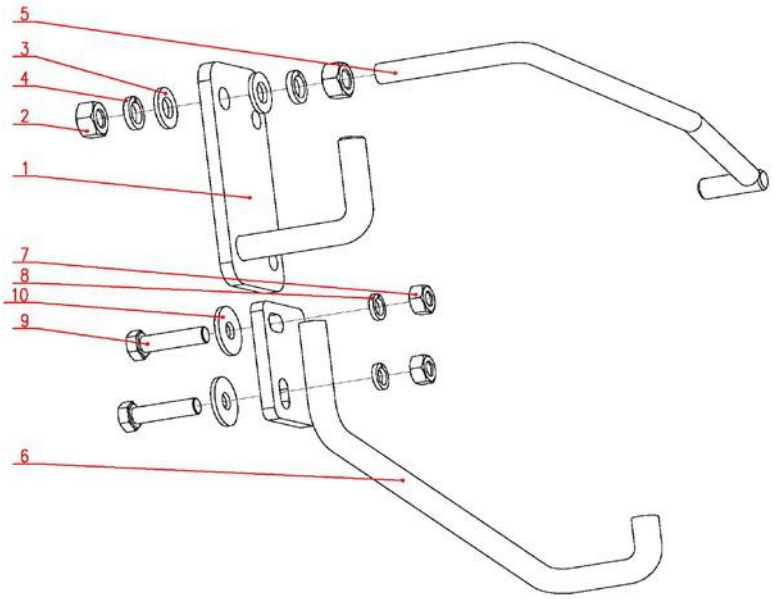

NO.	Description	QTY	Part Code	Note
1	Limit Belt Holder Weld	1	W2.5B-04-19X-01-00	
2	Nut M10	2	GB/6170-86	
3	Washer 10	2	GB/T97.1-85	
4	Washer 10	2	GB/T93-87	
5	Steel Bar Weld, Pressing Belt	1	W2.5B-04-19X-02-00	
6	Frame Assy, Lower	1	W2.5B-04-19X-03-00	
7	Nut M8	2	GB/6170-86	
8	Washer 8	2	GB/T93-87	
9	Bolt M8X30	2	GB/T5783-86	
10	Washer 8	2	GB/T96-85	