YANMAR

PARTS CATALOG

0CNP6-M06211EN

Last update Mar., 2019

Corresponding table of the machine and engine

Machine		Engine
Model	Serial No.	Model
AW70GV,RSX(F)-IN	～F800102	4TNV98-ZCNRCC
	F800103～	4TNV98-ZCNRC1C

Contents

0CNP6-M06211

Fig. No.	Fig. Name
ENGINE RELATED	
1.	ENGINE RELATED
2.	ENGINE PULLEY
3.	ENGINE MOUNT
4.	FUEL TANK
5.	AIR CLEANER
6.	MUFFLER
7.	RADIATOR
REAPING(1)	
8.	DRIVE SHAFT(PLATFORM)
9.	CENTER SHAFT
10.	REEL DISC
11.	TINE BAR
12.	REEL SLIDE
13.	LIFTING ARM
14.	REEL COUNTER
15.	REEL DRIVE
16.	REAP FRAME
17.	REAP EDGE
18.	REAP EDGE DRIVE
19.	REAP EDGE DRIVE CASE
160.	(19A)REAP EDGE DRIVE CASE
20.	DIVIDER
21.	REEL COVER
22.	SIDE COVER(PLATFORM)(RIGHT)
REAPING(2)	
23.	RAKE-IN DRIVE
24.	AUGER(PLATFORM)
25.	ADJUST
26.	CROP GUIDE
27.	FEEDER HOUSE DRIVE(1ST)
28.	FEEDER HOUSE DRIVE(2ND)
29.	CHAIN COVER(FEEDER HOUSE)
30.	FEEDER HOUSE DRUM
31.	CONVEYOR CHAIN
32.	SHEET METAL(FEEDER HOUSE)
33.	FEEDER HOUSE
161.	(33A)FEEDER HOUSE(1)
162.	(33B)FEEDER HOUSE(2)
163.	(33C)FEEDER HOUSE(3)
164.	(33D)FEEDER HOUSE(4)
165.	(33E)FEEDER HOUSE(5)
166.	(33F)FEEDER HOUSE(6)
34.	FITTING(FEEDER HOUSE)(1)
35.	FITTING(FEEDER HOUSE)(2)
36.	PIPING(REEL)
167.	DUSTPROOF FAN

Contents

0CNP6-M06211

Fig. No.	Fig. Name
THRESHING(1)	
37.	THRESH FRAME MOUNT
38.	THRESH FRAME
168.	(38A)THRESH FRAME(1)
169.	(38B)THRESH FRAME(2)
39.	CLEANING COVER
40.	PLATE(INLET)
41.	PLATE(FEED)
42.	FRAME(REAR)
43.	ROTOR COVER
44.	FRAME(CONNECT)
45.	SIDE COVER BRACKET
46.	SIDE COVER
47.	COVER(BASE)
48.	FRONT COVER
49.	REAR COVER
50.	DRIVE CASE
51.	INPUT SHAFT
52.	BELT(1ST & 2ND)
53.	SWING BELT
54.	ROTOR DRIVE BELT
55.	COUNTER BELT
56.	FRONT ROTOR BELT
57.	FRONT ROTOR BELT
58.	REAP DRIVE CHAIN

Fig. No.	Fig. Name
59.	REAP DRIVE CHAIN
60.	THRESH ROTOR
61.	FRONT ROTOR
62.	CONCAVE
63.	BODY(UPPER)(INNER)
64.	OPEN FRAME
THRESHING(2)	
65.	SWING SHAFT
66.	SWING ARM(REAR)
67.	SWING ARM(FRONT)
68.	SWING FRAME(1)
170.	(68A)SWING FRAME(1)
69.	SWING FRAME(2)
171.	(69A)SWING FRAME(2)
70.	SWING FRAME(3)
172.	(70A)SWING FRAME(3)
71.	WINNOWER SHUTTER
72.	WINNOWER FAN
73.	COVER(BODY)
74.	CONVEYOR(1ST)
75.	GRAIN ELEVATE AUGER CASE
76.	GRAIN ELEVATE AUGER
77.	THROWER(GRAIN ELEVATE)
78.	BOTTOM PLATE

Contents

0CNP6-M06211

Fig. No. Fig. Name

79. CONVEYOR(2ND)
80. VERTICAL CONVEYOR CASE(2ND)
81. VERTICAL CONVEYOR(2ND)

TRAVELING(1)

82. TRAVEL DRIVE BELT
83. THRESH DRIVE BELT
84. TRANSMISSION CASE
85. PARKING BRAKE
86. SIDE BRAKE
87. SHIFT SHAFT
88. BRAKE SHAFT
89. SIDE CLUTCH SHAFT
90. REDUCTION SHAFT
91. AXLE SHAFT
92. SUB SHIFT
93. SIDE CLUTCH
94. H.S.T.
95. TRUNNION ARM
96. H.S.T. MOUNT
97. INPUT CASE
98. MAIN SHAFT

TRAVELING(2)

99. FRONT COLUMN

Fig. No. Fig. Name

100. FRAME(SIDE COLUMN)
101. SIDE COLUMN(1)
102. SIDE COLUMN(2)
103. SIDE LAMP
104. BRAKE CONTROL
105. CLUTCH CONTROL(SIDE)
106. MAIN SHIFT CONTROL
107. SUB SHIFT CONTROL
108. CLUTCH CONTROL(REAP)
109. CLUTCH CONTROL(THRESH)
110. HYDRAULIC TANK
111. PIPING(VALVE)
112. PIPING(H.S.T.)
113. CONTROL VALVE
114. TRAVEL ACTUATOR
115. HYDRAULIC CYLINDER
116. STEP FRAME
117. SEAT
118. SEAT MOUNT
119. SUNVISOR

TRAVELING(3)

120. CHASSIS FRAME
121. WEIGHT
122. TRANSMISSION MOUNT

Contents

0CNP6-M06211

Fig. No.	Fig. Name
123.	IDLER
124.	TRACK ROLLER
125.	TRACK ROLLER
126.	CRAWLER GUIDE
127.	SPROCKET
128.	CARRIER ROLLER
129.	CRAWLER
130.	ENGINE ROOM FRAME
131.	ENGINE COVER(1)
132.	ENGINE COVER(2)
133.	MIRROR

ELECTRICAL PARTS

134.	BATTERY
135.	WIRE HARNESS
136.	CONTROLLER(SA-R)
137.	ANTENNA(SA-R)

PADDY TANK, LABEL & ACCESSORY

138.	AUGER INPUT
139.	AUGER CLUTCH
140.	LOWER GRAIN AUGER
141.	LOWER GRAIN AUGER SUCCESSION
142.	VERTICAL AUGER FRAME
143.	VERTICAL AUGER

Fig. No.	Fig. Name
144.	AUGER SUCCESS(1)
145.	AUGER SUCCESS(2)
146.	AUGER(LATERAL)
147.	AUGER REST
148.	GRAIN TANK
149.	TANK FIXING
150.	AUGER CONTROL(MOVE-ROUND)
151.	TANK COVER
152.	VIBRATION PLATE
153.	COVER(MOTOR)
154.	LABEL(1)
155.	LABEL(2)
156.	LABEL(SAFETY)(1)
157.	LABEL(SAFETY)(2)
158.	TOOL
159.	ACCESSORY

Fig.1. ENGINE RELATED

(A)=AW70GV,RSX(F)-IN (D)=
(B)= (E)=
(C)= (F)=

No.	Lev.	Parts No.	Description	Q'ty (A)	(B)	(C)	(D)	(E)	(F)	I	R
1	1	1E6B30-00150	PIPE ASSY, DRAIN LO	1							
2	1	1E8550-00160	PLUG, DRAIN 12	1							
3	1	1E8540-84101	HARNESS, STARTER	1							
4	1	1E8559-84960	BAND, WIRE LOCK 250	1							
5	1	22157-080000	WASHER, 8	2							
6	1	22190-120002	WASHER, SEAL 12	1							
7	1	22217-080000	WASHER, SPRING 8	2						Z	
	(A=F800083)										
8	1	23000-022000	CLAMP, 22	1							
9	1	26717-080002	NUT, M8	2							
9-1	1	26306-080002	NUT, M8	2						N	
	(A=F800083)										

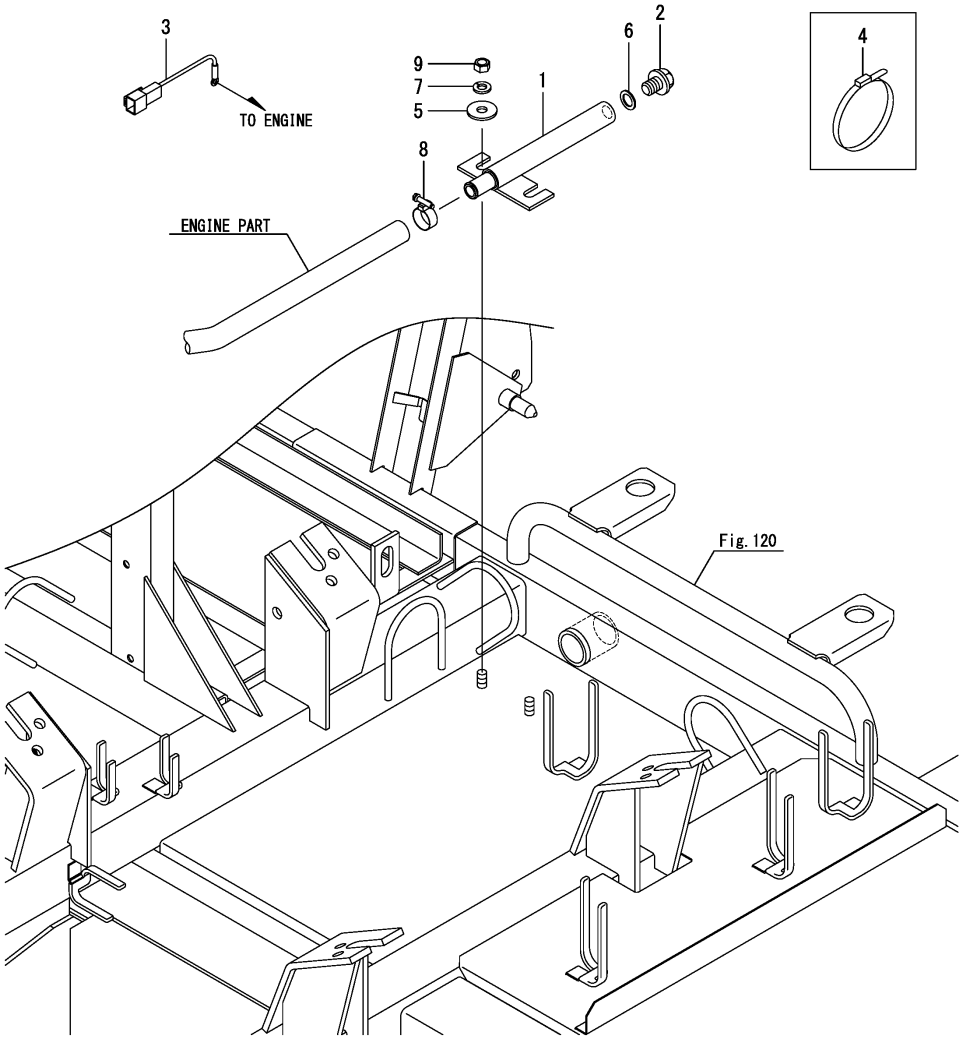

N:Old ⇄(Yes/No) New, Q:Old ⇄(No/Yes) New, R:Old ⇄(Yes/Yes) New, S:Old ⇄(No/No) New, W:Add, Z:Discontinued, F:Interchangeable by set, K:Q'ty Change

Copyright (C) 2018 YANMAR CO., LTD. All RightsReserved.

Fig.2. ENGINE PULLEY

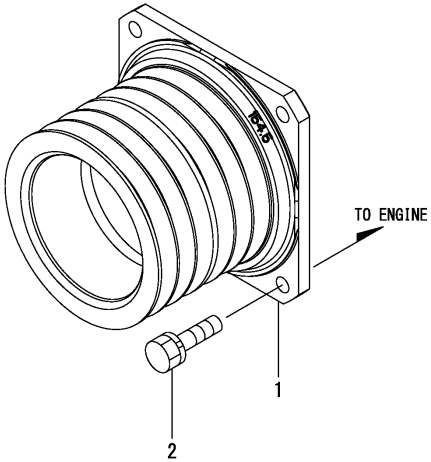

(A)=AW70GV,RSX(F)-IN (D)=
(B)= (E)=
(C)= (F)=

No.	Lev.	Parts No.	Description	Q'ty (A)	(B)	(C)	(D)	(E)	(F)	I	R
1	1	1E6C43-00150	PULLEY,ENG 154.5	1							
2	1	26013-120302	BOLT, M12X 30	4							

N:Old $\xleftrightarrow[\text{No}]{\text{Yes}}$ New, Q:Old $\xleftrightarrow[\text{Yes}]{\text{No}}$ New, R:Old $\xleftrightarrow[\text{Yes}]{\text{Yes}}$ New, S:Old $\xleftrightarrow[\text{No}]{\text{No}}$ New, W:Add, Z:Discontinued, F:Interchangeable by set, K:Q'ty Change

Copyright (C) 2018 YANMAR CO., LTD. All RightsReserved.

Fig.3. ENGINE MOUNT

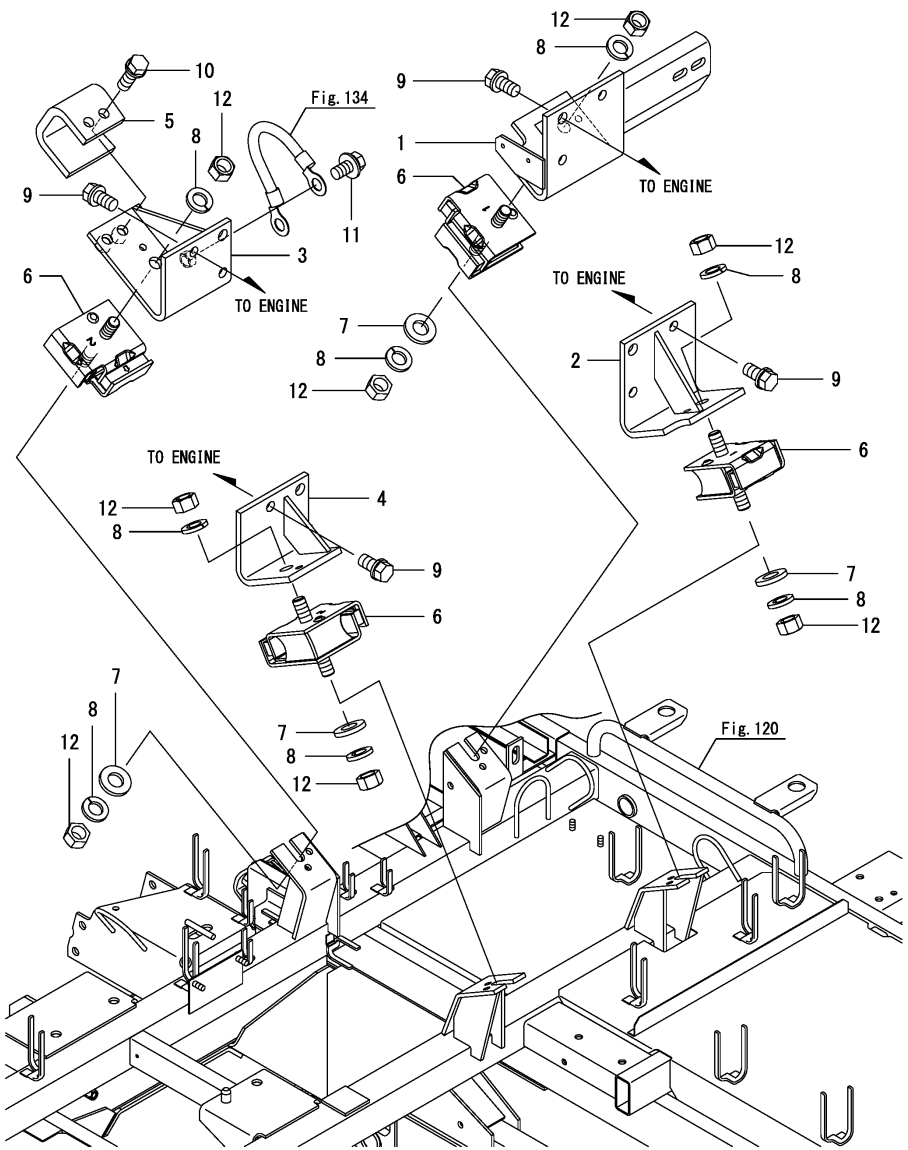

(A)=AW70GV,RSX(F)-IN (D)=
(B)= (E)=
(C)= (F)=

No.	Lev.	Parts No.	Description	Q'ty (A)	(B)	(C)	(D)	(E)	(F)	I	R
1	1	1E6B31-01111	MOUNT,ENGINE FRONT R	1							
1-1	1	1E6C81-01110	MOUNT,ENG. FRONT R	1						N	
	(A=F800083)										
2	1	1E9060-01150	MOUNT, ENGINE REAR R	1							
2-1	1	1E6C80-01150	MOUNT, ENG. REAR R	1						N	
	(A=F800083)										
3	1	1E6C40-01171	MOUNT,ENGINE FRONT L	1							
3-1	1	1E6C80-01170	MOUNT, ENG. FRONT L	1						N	
	(A=F800083)										
4	1	1E6B30-01200	MOUNT, ENGINE REAR L	1							
4-1	1	1E6C80-01200	MOUNT, ENG. REAR L	1						N	
	(A=F800083)										
5	1	1E6C40-01200	STOPPER	1							
6	1	1E8380-01200	RUBBER, CUSHION 600	4							
7	1	1E8559-01220	WASHER, 12X26X3.2	4							
8	1	22217-120000	WASHER, SPRING 12	8						Z	
	(A=F800083)										
9	1	26013-100202	BOLT, M10X 20	12							
10	1	26013-100302	BOLT, M10X 30	2							
11	1	26014-100202	BOLT, M10X 20	1						Z	
	(A=F800083)										
12	1	26717-120002	NUT, M12	8							
12-1	1	26367-120002	NUT, M12	8						N	
	(A=F800083)										

N:Old $\overset{\text{Yes}}{\underset{\text{No}}{\leftrightarrow}}$ New, Q:Old $\overset{\text{No}}{\underset{\text{Yes}}{\leftrightarrow}}$ New, R:Old $\overset{\text{Yes}}{\underset{\text{Yes}}{\leftrightarrow}}$ New, S:Old $\overset{\text{No}}{\underset{\text{No}}{\leftrightarrow}}$ New, W:Add, Z:Discontinued, F:Interchangeable by set, K:Q'ty Change

Copyright (C) 2018 YANMAR CO., LTD. All RightsReserved.

Fig.4. FUEL TANK

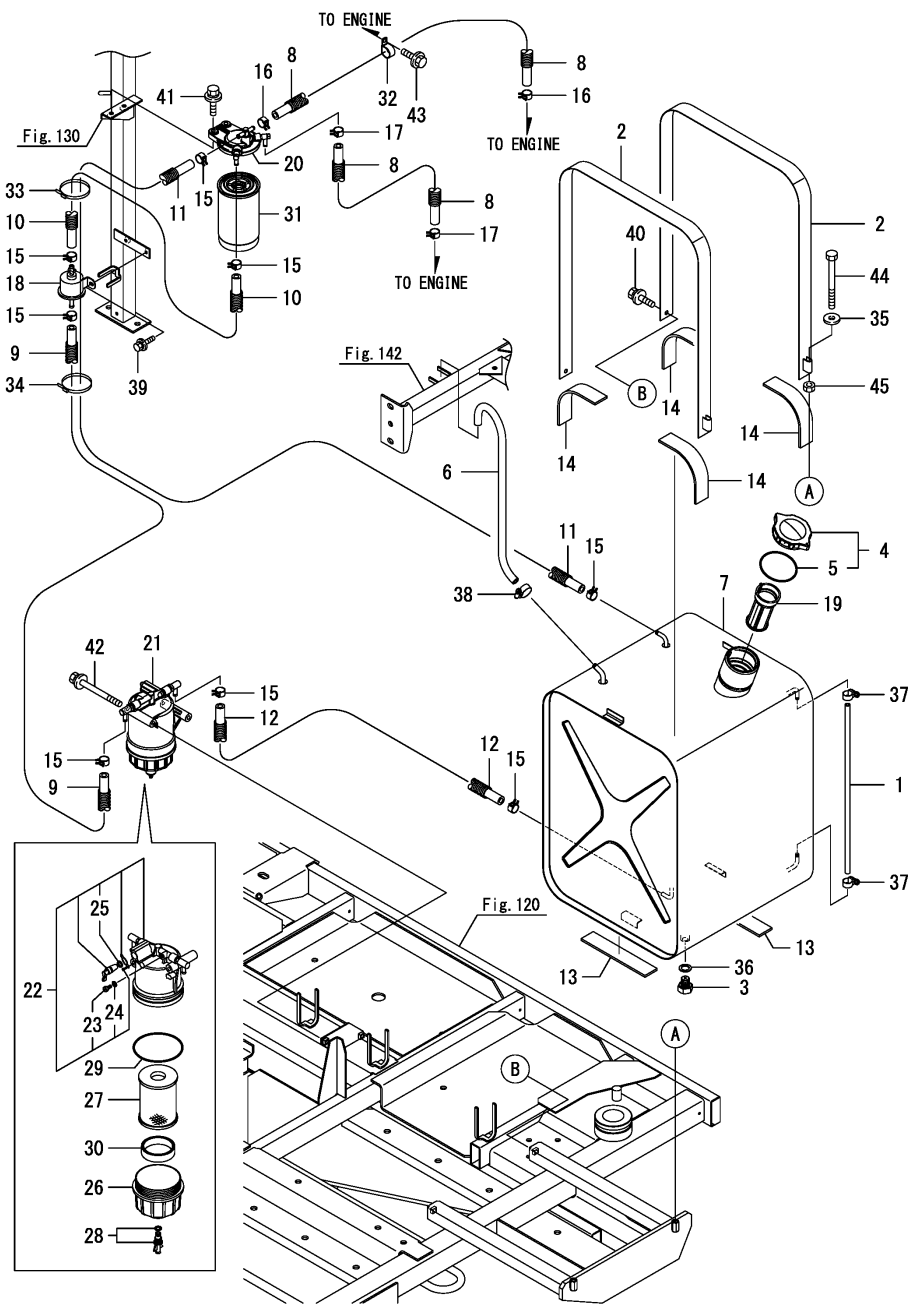

(A)=AW70GV,RSX(F)-IN (D)=
(B)= (E)=
(C)= (F)=

No.	Lev.	Parts No.	Description	Q'ty (A)	(B)	(C)	(D)	(E)	(F)	I	R
1	1	1E6B30-03060	PIPE, OIL LEVEL	1							
1-1	1	1S7596-03690	HOSE, FO LEVEL B	1						N	
	(A=*2018.07)										
2	1	1E6B30-03080	BAND, FUEL TANK	2							
3	1	1E8559-03080	PLUG, DRAIN	1							
4	1	1E6B30-03180	CAP, FUEL TANK	1							
4-1	1	1E6B30-03181	CAP, FUEL TANK	1						N	
	(A=*2018.07)										
5	2	1E6B30-03131	O-RING	1							
5-1	2	1S7596-03190	O-RING, 4D P 71.1	1						N	
	(A=*2018.07)										
6	1	1E6B30-03340	PIPE, L=610	1							
7	1	1E6C40-03403	TANK, FUEL	1							
7-1	1	1E6C43-03400	TANK, FUEL	1						N	
	(A=F800033)										
8	1	1E6C40-03500	PIPE ASSY, FO L=700	2							
9	1	1E6B30-03531	PIPE ASSY, FUEL 1340	1							
10	1	1E6B30-03560	PIPE ASSY, FUEL 370	1							
11	1	1E6C40-03590	PIPE ASSY, FO L=2700	1							
12	1	1E6C40-03660	PIPE ASSY, FO L=960	1							
13	1	1E6C40-04280	SHEET,CUSHION C	2							
14	1	1E6C40-04280	SHEET,CUSHION C	4							
15	1	106990-44660	CLAMP, HOSE 12.5	8							
16	1	106990-44660	CLAMP, HOSE 12.5	2							
17	1	106990-44660	CLAMP, HOSE 12.5	2							
18	1	119225-52102	PUMP, FUEL FEED	1							
19	1	101504-55101	STRAINER, FUEL	1							
20	1	119934-55611	BRACKET, FILTER	1							
21	1	129E22-55700	FILTER ASSY,FUEL PRE	1							
22	2	129E00-55710	BODY ASSY	1							
23	3	129A00-55751	PLUG, AIR VENT	1							
24	3	129A00-55760	O-RING	1							
25	3	24311-000110	O-RING, 1AP11.0	1							
26	2	129A00-55720	CUP, CLEAR	1							
27	2	129A00-55730	ELEMENT, FUEL FILTER	1							
28	2	129242-55740	PLUG, DRAIN	1							
29	2	129A00-55740	O-RING	1							
30	2	129A00-55770	FLOAT	1							
31	1	129907-55801	FILTER, FUEL	1							
32	1	1E8559-83090	CLIP, COT-35	1							
33	1	1E8559-84970	BAND, WIRE LOCK 140	1							
34	1	1E8559-84970	BAND, WIRE LOCK 140	1							
35	1	22157-080000	WASHER, 8	2							
36	1	22190-120002	WASHER, SEAL 12	1							
36-1	1	22190-120006	WASHER, SEAL 12	1						N	
	(A=*2018.07)										
37	1	23000-013000	CLAMP, 13	2							
38	1	23000-019000	CLAMP, 19	1							
39	1	26014-060162	BOLT, M6X 16	2							
40	1	26014-080202	BOLT, M8X 20	2							
41	1	26014-080302	BOLT, M8X 30	2							

N:Old $\xleftrightarrow[\text{No}]{\text{Yes}}$ New, Q:Old $\xleftrightarrow[\text{Yes}]{\text{No}}$ New, R:Old $\xleftrightarrow[\text{Yes}]{\text{Yes}}$ New, S:Old $\xleftrightarrow[\text{No}]{\text{No}}$ New, W:Add, Z:Discontinued, F:Interchangeable by set, K:Q'ty Change

++ CONTINUE ++

Copyright (C) 2018 YANMAR CO., LTD. All RightsReserved.

Fig.4. FUEL TANK

(A)=AW70GV,RSX(F)-IN (D)=
(B)= (E)=
(C)= (F)=

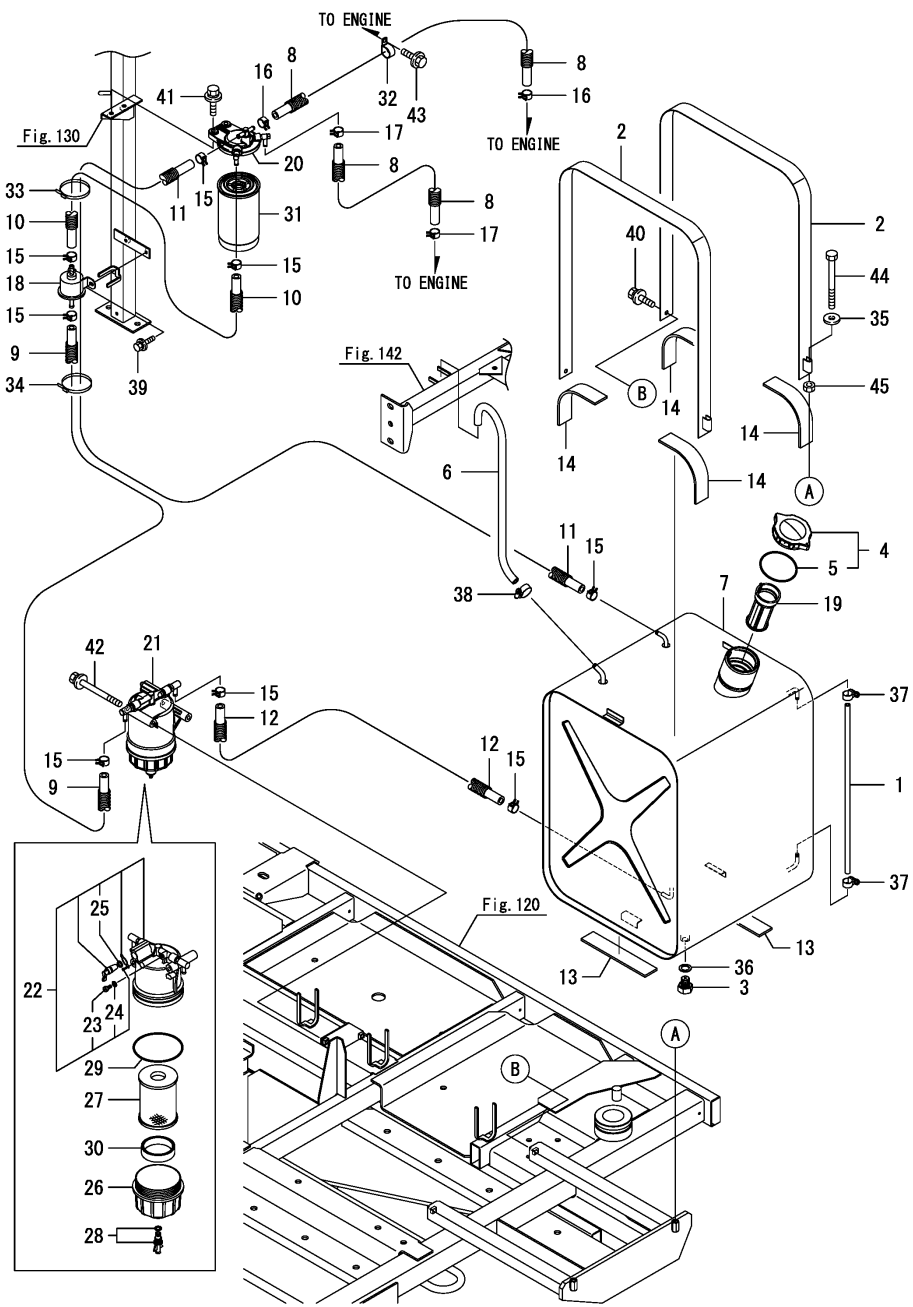

No.	Lev.	Parts No.	Description	Q'ty (A)	(B)	(C)	(D)	(E)	(F)	I	R
42	1	26014-081002	BOLT, M8X100	2							
43	1	26106-080162	BOLT, M8X 16 PLATED	1							
44	1	26116-080904	BOLT, M8X 90 PLATED	2							
45	1	26717-080002	NUT, M8	2							

N:Old $\xleftarrow[\text{No}]{\text{Yes}}$ New, Q:Old $\xleftarrow[\text{Yes}]{\text{No}}$ New, R:Old $\xleftarrow[\text{Yes}]{\text{Yes}}$ New, S:Old $\xleftarrow[\text{No}]{\text{No}}$ New, W:Add, Z:Discontinued, F:Interchangeable by set, K:Q'ty Change

Copyright (C) 2018 YANMAR CO., LTD. All RightsReserved.

Fig.5. AIR CLEANER

(A)=AW70GV,RSX(F)-IN (D)=
(B)= (E)=
(C)= (F)=

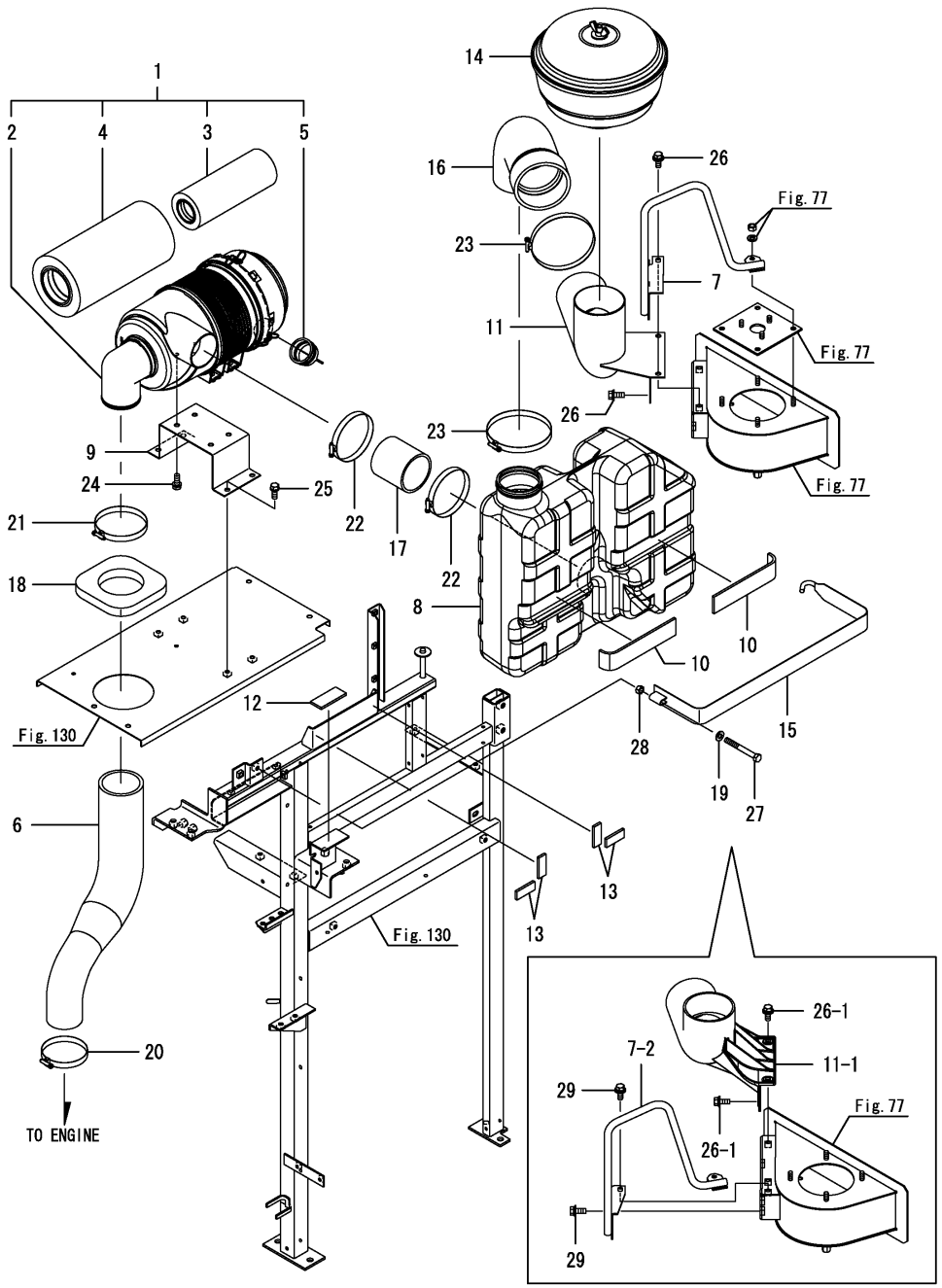

No.	Lev.	Parts No.	Description	Q'ty (A)	(B)	(C)	(D)	(E)	(F)	I	R
1	1	1E6C45-04002	AIR CLEANER ASSY,7.5	1							
2	2	1E6B30-04010	BODY, CLEANER 7.5	1							
3	2	1E6C45-04010	ELEMENT, INNER 7.5	1							
4	2	1E6B30-04020	ELEMENT, CLEANER 7.5	1							
5	2	1E6B30-04030	VALVE, VACUUM 7.5	1							
6	1	1E6C45-04230	HOSE, AIR INT.L0.7.5	1							
7	1	1E6B34-04250	GUARD, PRE CLEANER	1							
7-1	1	1E6C43-04250	GUARD, PRECLEANER	1							R
	(A=F800033)										
7-2	1	1E6C43-04251	GUARD, PRECLEANER	1							S
	(A=F800103)										
8	1	1E6B30-04260	SILENCER, AIR INTAKE	1							
8-1	1	1E6B30-04261	SILENCER, INTAKE	1							R
	(A=F800103)										
9	1	1E6C45-04270	STAY, AIR CLEAN. 7.5	1							
10	1	1E6C40-04280	SHEET,CUSHION C	2							
10-1	1	1E6C40-04290	SHEET,CUSHION	2							N
	(A=*2018.10)										
11	1	1E6C41-04300	BRACKET ASSY,INT.G	1							
11-1	1	1E6D10-04030	BRACKET ASSY, INTAKE	1							S
	(A=F800103)										
12	1	1E6B30-04360	SHEET, CUSHION D	1							
13	1	1E6B30-04381	SHEET, CUSHION F	4							
14	1	1E6C45-04400	CLEANER ASSY, PRE	1							
15	1	1E6B30-04730-1	BAND ASSY,SILENCER	1							
16	1	1E6B31-04780	HOSE, AIR INTAKE G	1							
17	1	1E6C45-04790	HOSE,AIR INTAKE 70	1							
18	1	1E6B31-75460	SEAL, INTAKE	1							
19	1	22137-080000	WASHER, 8	1							
20	1	23000-090000	CLAMP, 90	1							
21	1	23000-102000	CLAMP, 102	1							
22	1	23000-102000	CLAMP, 102	2							
23	1	23000-127000	CLAMP, 127	2							
24	1	26013-080202	BOLT, M8X 20	4							
25	1	26013-080202	BOLT, M8X 20	4							
26	1	26014-080252	BOLT, M8X 25	3							
26-1	1	26014-080202	BOLT, M8X 20	3							N
	(A=F800103)										
27	1	26116-080704	BOLT, M8X 70 PLATED	1							
28	1	26717-080002	NUT, M8	1							
29	1	26014-080202	BOLT, M8X 20	2							W
	(A=F800103)										

N:Old $\frac{\text{Yes}}{\text{No}}$ New, Q:Old $\frac{\text{No}}{\text{Yes}}$ New, R:Old $\frac{\text{Yes}}{\text{Yes}}$ New, S:Old $\frac{\text{No}}{\text{No}}$ New, W:Add, Z:Discontinued, F:Interchangeable by set, K:Q'ty Change

Copyright (C) 2018 YANMAR CO., LTD. All RightsReserved.

Fig.6. MUFFLER

(A)=AW70GV,RSX(F)-IN (D)=
(B)= (E)=
(C)= (F)=

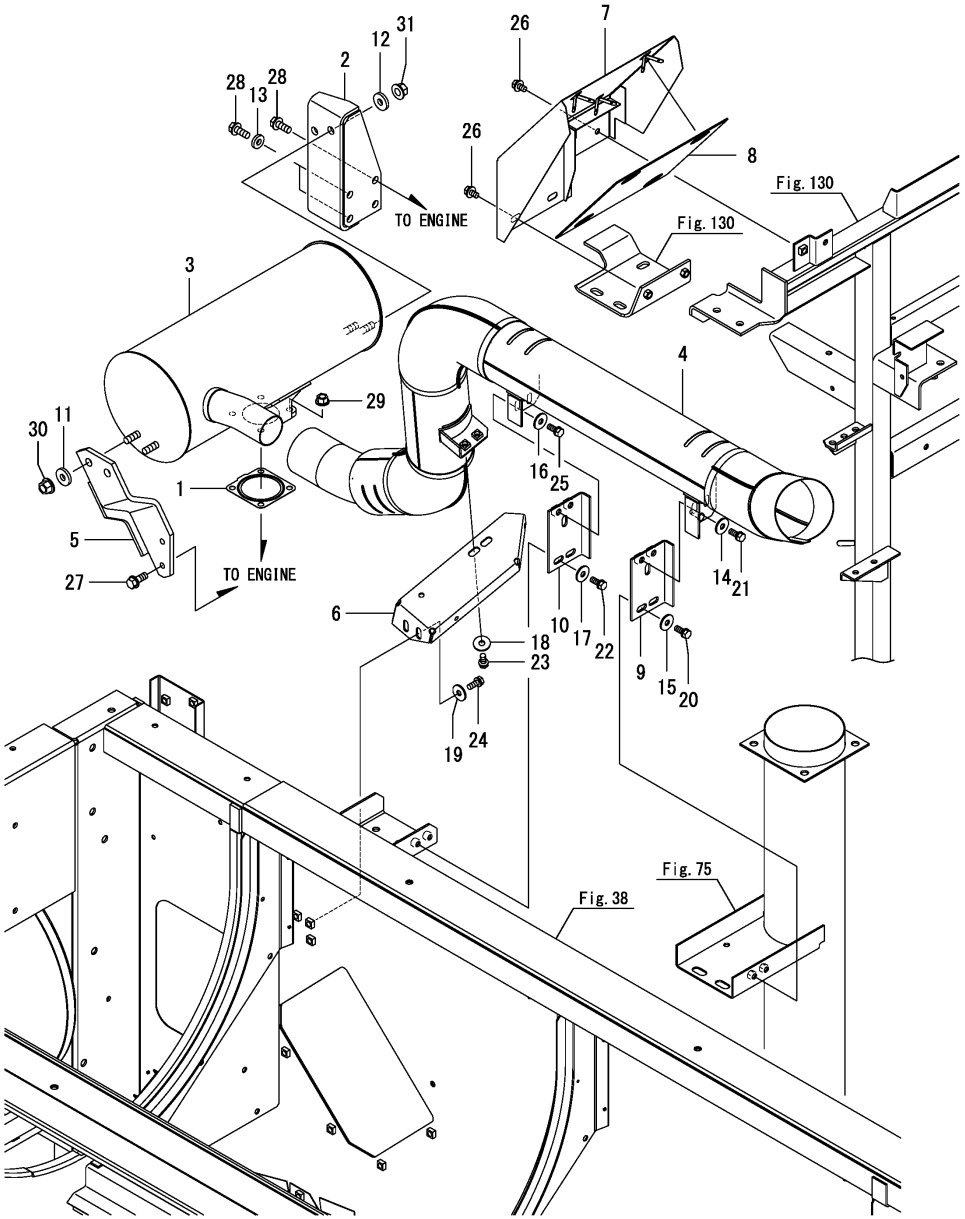

No.	Lev.	Parts No.	Description	Q'ty (A)	(B)	(C)	(D)	(E)	(F)	I	R
1	1	1E6B35-04530	GASKET, SILENCER	1							
2	1	1E6B35-04551	STAY, SILENDER	1							
3	1	1E6C45-04551	SILENCER ASSY, 98	1							
4	1	1E6C80-04600	PIPE ASSY, TAIL	1							
5	1	1E6C45-04700	STAY, SILENCER L 98	1							
6	1	1E6C80-04760	STAY, MUFFLER A	1							
7	1	1E6C80-04810	GUARD,EXHAUST PIPE	1							
8	1	1E6C40-04830	SHEET,EXHAUST PIPE	1							
9	1	1E6C40-04890	STAY, MUFFLER B	1							
10	1	1E6C40-04890	STAY, MUFFLER B	1							
11	1	1E8559-29130	COLLAR, 10.5X28X4.5	2							
12	1	1E8559-29130	COLLAR, 10.5X28X4.5	2							
13	1	1E8559-35290	COLLAR, 9.5X22X4.5	2							
14	1	22157-080000	WASHER, 8	2							
15	1	22157-080000	WASHER, 8	2							
16	1	22157-080000	WASHER, 8	2							
17	1	22157-080000	WASHER, 8	2							
18	1	22157-080000	WASHER, 8	2							
19	1	22157-080000	WASHER, 8	2							
20	1	26013-080202	BOLT, M8X 20	2							
21	1	26013-080202	BOLT, M8X 20	2							
22	1	26013-080202	BOLT, M8X 20	2							
23	1	26013-080202	BOLT, M8X 20	2							
24	1	26013-080202	BOLT, M8X 20	2							
25	1	26013-080202	BOLT, M8X 20	2							
26	1	26014-080162	BOLT, M8X 16	3							
27	1	26106-080202	BOLT, M8X 20 PLATED	2							
28	1	26106-080202	BOLT, M8X 20 PLATED	4							
29	1	26306-080002	NUT, M8	4							
30	1	26306-100002	NUT, M10	2							
31	1	26306-100002	NUT, M10	2							

N:Old $\xleftarrow[\text{No}]{\text{Yes}}$ New, Q:Old $\xleftarrow[\text{Yes}]{\text{No}}$ New, R:Old $\xleftarrow[\text{Yes}]{\text{Yes}}$ New, S:Old $\xleftarrow[\text{No}]{\text{No}}$ New, W:Add, Z:Discontinued, F:Interchangeable by set, K:Q'ty Change

Copyright (C) 2018 YANMAR CO., LTD. All RightsReserved.

Fig.7. RADIATOR

(A)=AW70GV,RSX(F)-IN (D)=
(B)= (E)=
(C)= (F)=

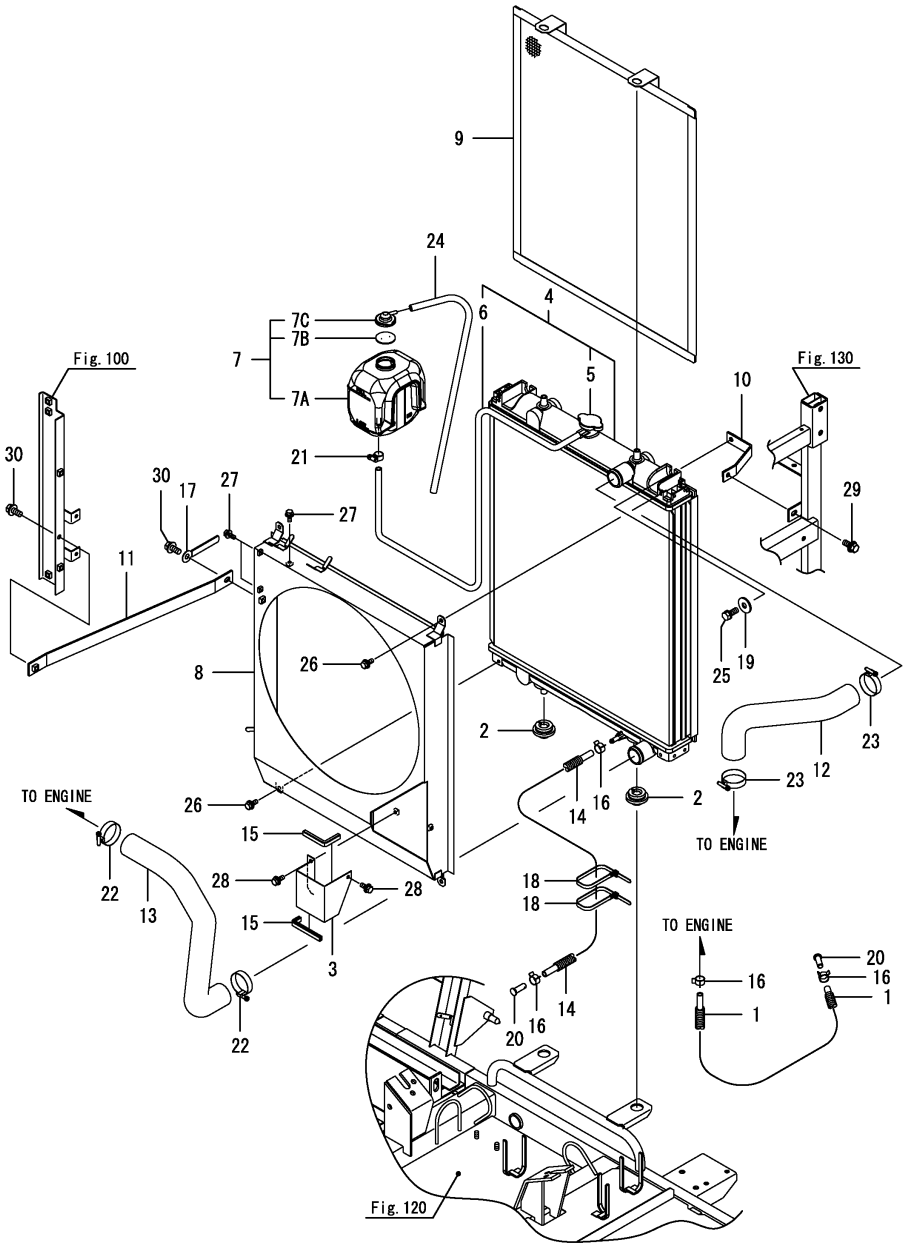

No.	Lev.	Parts No.	Description	Q'ty (A)	(B)	(C)	(D)	(E)	(F)	I	R
1	1	1E6B30-03500	PIPE ASSY, FUEL 900	1							
2	1	1E8809-04010	RUBBER, CUSHION	2							
3	1	1E9062-04080	GUARD, HOSE	1							
4	1	1E6C40-04100	RADIATOR ASSY,600	1							
5	2	1E6B30-04120	CAP	1							
6	2	1E6B30-04132	HOSE	1							
7	1	1E6C40-04151	TANK SUB ASSY	1							
7A	2	1E9061-04160	SUB TANK	1							
7B	2	1E9061-04180	PACKING , SUB TANK	1							
7C	2	1E9061-04190	CAP , SUB TANK	1							
8	1	1E6C40-04311	SHROUD	1							
9	1	1E6C40-04400	PROTECTOR, FRONT	1							
10	1	1E6B30-04430	STAY, RADIATOR A	1							
10-1	1	1E6B30-04430-1	STAY, RADIATOR A	1						S	1
	(A=F800033)										
11	1	1E6B30-04450	STAY, RADIATOR B	1							
12	1	1E6B30-04480	HOSE, WATER B	1							
13	1	1E6C40-04480	HOSE, WATER A	1							
14	1	1E6B30-04930	PIPE ASSY, FUEL 450	1							
15	1	1E8559-32940	PROTECTOR, 100	2							
16	1	106990-44660	CLAMP, HOSE 12.5	4							
17	1	1J5025-47010	CLAMP, WIRE 8	1							
18	1	1E8559-84960	BAND, WIRE LOCK 250	2							
19	1	22157-080000	WASHER, 8	1							
20	1	22487-080200	PIN, H 8X 20	2							
21	1	23000-013000	CLAMP, 13	1							
22	1	23000-048000	CLAMP, 48	2							
23	1	23000-048000	CLAMP, 48	2							
24	1	23980-730550	HOSE, 7.3X 550	1							
25	1	26013-080202	BOLT, M8X 20	1							
26	1	26014-060162	BOLT, M6X 16	4							
27	1	26014-060162	BOLT, M6X 16	3							
28	1	26014-060162	BOLT, M6X 16	2							
29	1	26014-080202	BOLT, M8X 20	1							
30	1	26014-080202	BOLT, M8X 20	2							

Remarks
(1)Painting color=No.10 : YANMAR NAVY GRAY, No.10-1 : CATION E-COATING BLACK.

N:Old $\xleftrightarrow[\text{No}]{\text{Yes}}$ New, Q:Old $\xleftrightarrow[\text{Yes}]{\text{No}}$ New, R:Old $\xleftrightarrow[\text{Yes}]{\text{Yes}}$ New, S:Old $\xleftrightarrow[\text{No}]{\text{No}}$ New, W:Add, Z:Discontinued, F:Interchangeable by set, K:Q'ty Change

Copyright (C) 2018 YANMAR CO., LTD. All RightsReserved.

Fig.8. DRIVE SHAFT(PLATFORM)

(A)=AW70GV,RSX(F)-IN (D)=
(B)= (E)=
(C)= (F)=

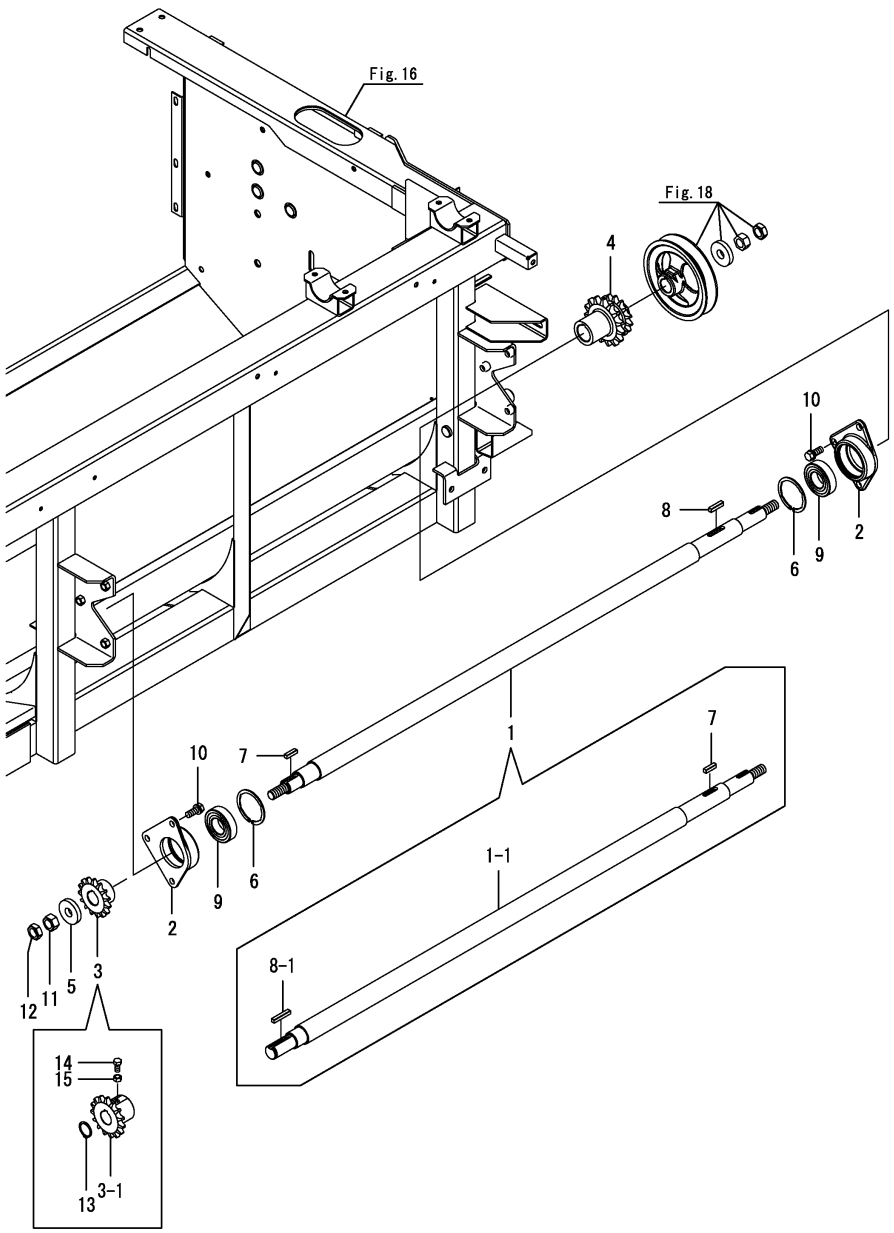

No.	Lev.	Parts No.	Description	Q'ty (A)	(B)	(C)	(D)	(E)	(F)	I	R
1	1	1E6C85-12100	SHAFT, PF DRIVE	1							
1-1	1	1E6C85-12101	SHAFT, PF DRIVE	1						F	1
	(A=*2018.08)										
2	1	1E6C80-12200	CASE, BEARING	2							
3	1	1E6C85-12300	SPROCKET, 13T	1							
3-1	1	1E6D15-12300	SPROCKET, 13T	1						F	1
	(A=*2018.08)										
4	1	1E6C85-12400	SPROCKET,PF	1							
4-1	1	1E6C85-12500	SPROCKET,PF	1						N	
	(A=F800157)										
5	1	1E6B30-36560	COLLAR, 16.5X45X8	1						Z	1
	(A=*2018.08)										
6	1	22252-000621	RING, 62	2							
7	1	22551-070250	KEY, 7X 25	1							
8	1	22551-070300	KEY, 7X 30	1							
8-1	1	22551-070400	KEY, 7X 40	1						F	1
	(A=*2018.08)										
9	1	24104-062064	BEARING, BALL 6206UU	2							
10	1	26013-100252	BOLT, M10X 25	6							
11	1	26737-160002	NUT, M16	1						Z	1
	(A=*2018.08)										
12	1	26777-160002	NUT, LOCK M16	1						Z	1
	(A=*2018.08)										
13	1	22242-000250	RING, 25	1						W	1
	(A=*2018.08)										
14	1	26116-080162	BOLT, M8X 16 PLATED	1						W	1
	(A=*2018.08)										
15	1	26717-080002	NUT, M8	1						W	1
	(A=*2018.08)										

Remarks
(1)No.1-1, 3-1, 5, 8-1, 11, 12, 13, 14 & 15 interchangeable by set.

N:Old $\frac{\text{Yes}}{\text{No}}$ New, Q:Old $\frac{\text{No}}{\text{Yes}}$ New, R:Old $\frac{\text{Yes}}{\text{Yes}}$ New, S:Old $\frac{\text{No}}{\text{No}}$ New, W:Add, Z:Discontinued, F:Interchangeable by set, K:Q'ty Change

Copyright (C) 2018 YANMAR CO., LTD. All RightsReserved.

Fig.9. CENTER SHAFT

(A)=AW70GV,RSX(F)-IN (D)=
(B)= (E)=
(C)= (F)=

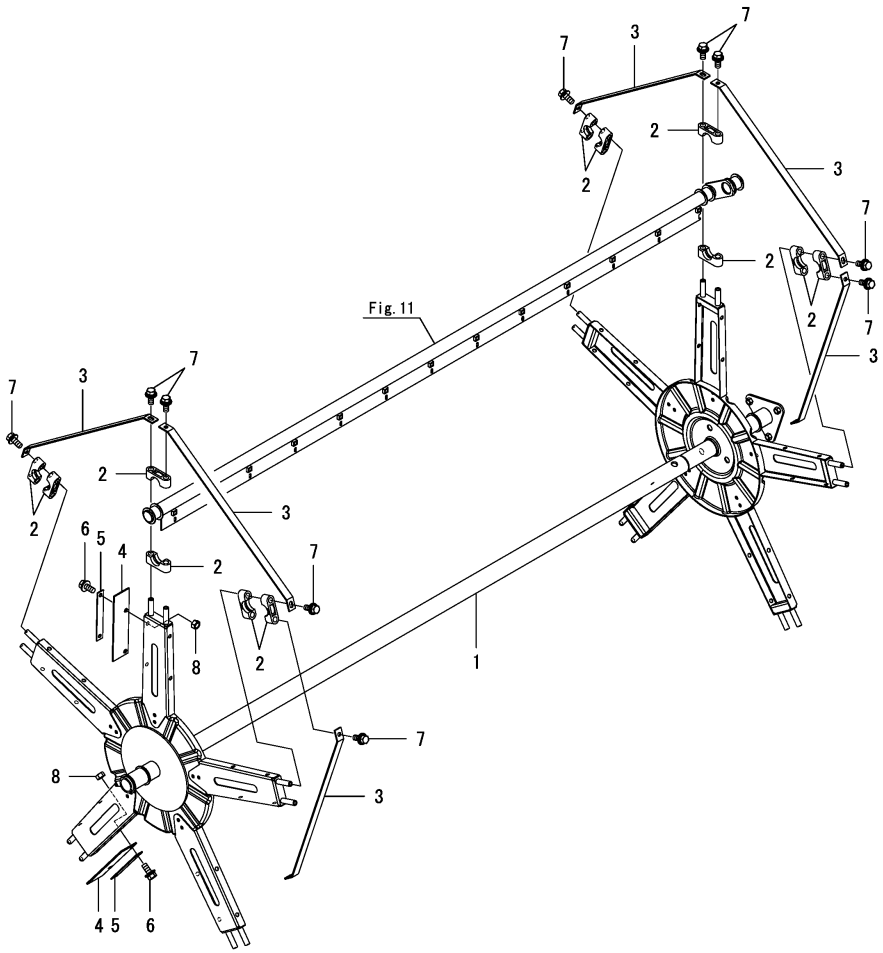

No.	Lev.	Parts No.	Description	Q'ty (A)	(B)	(C)	(D)	(E)	(F)	I	R
1	1	1E6C85-13000	SHAFT, CENTER	1							
2	1	1E6C85-13230	BRACKET, TINE	20							
3	1	1E6C85-13250	RETAINER, BAR	10							
3-1	1	1E6C85-13251	RETAINER, BAR	10						N	
	(A=F800157)										
3-2	1	1E6C85-13251-1	RETAINER, BAR	10						S	1
	(A=*2018.12)										
4	1	1E6B30-13300	PLATE, REEL	2							
5	1	1E6B30-13350	RETAINER, PLATE	2							
5-1	1	1E6B30-13350-1	RETAINER, PLATE	2						S	1
	(A=*2018.12)										
6	1	26014-080202	BOLT, M8X 20	4							
7	1	26014-080202	BOLT, M8X 20	20							
8	1	26717-080002	NUT, M8	4							

Remarks
(1)Painting color=No.3-1, 5 : YANMAR NAVY GRAY, No.3-2, 5-1 : CATION E-COATING BLACK.

N:Old $\frac{\text{Yes}}{\text{No}}$ New, Q:Old $\frac{\text{No}}{\text{Yes}}$ New, R:Old $\frac{\text{Yes}}{\text{Yes}}$ New, S:Old $\frac{\text{No}}{\text{No}}$ New, W:Add, Z:Discontinued, F:Interchangeable by set, K:Q'ty Change

Copyright (C) 2018 YANMAR CO., LTD. All RightsReserved.

Fig.10. REEL DISC

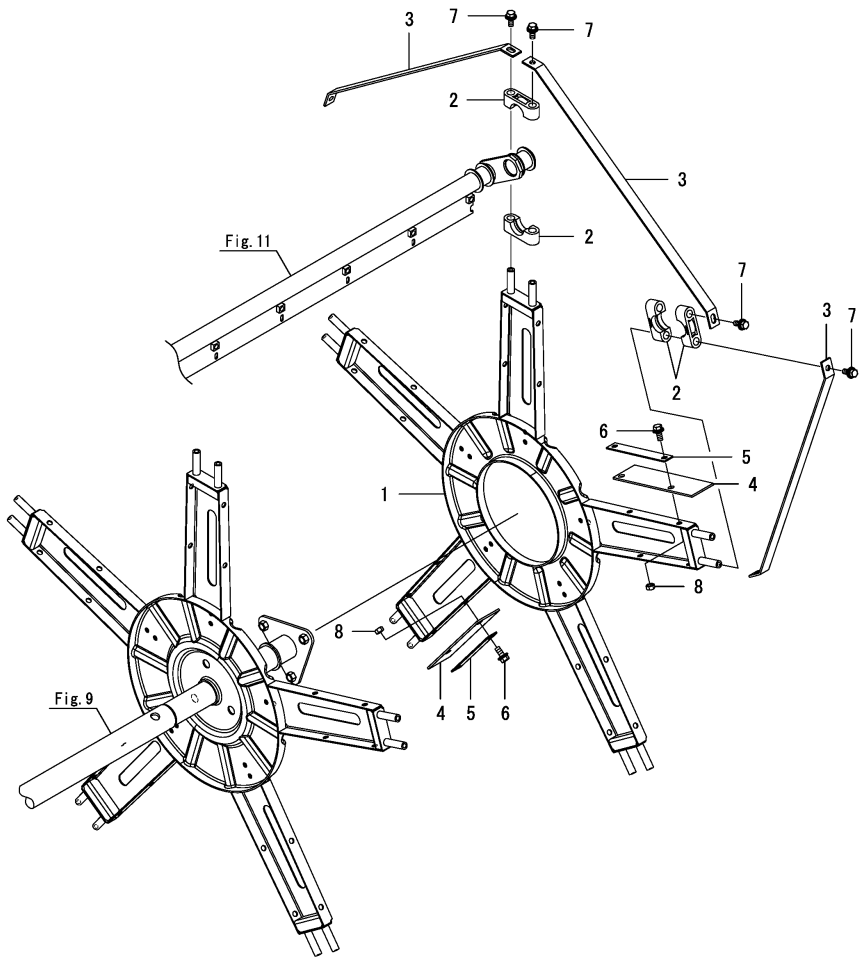

(A)=AW70GV,RSX(F)-IN (D)=
(B)= (E)=
(C)= (F)=

No.	Lev.	Parts No.	Description	Q'ty (A)	(B)	(C)	(D)	(E)	(F)	I	R
1	1	1E6C85-13200	DISK,REEL B	1							
2	1	1E6C85-13230	BRACKET, TINE	10							
3	1	1E6C85-13250	RETAINER, BAR	5							
3-1	1	1E6C85-13251	RETAINER, BAR	5						N	
	(A=F800157)										
3-2	1	1E6C85-13251-1	RETAINER, BAR	5						S	1
	(A=*2018.12)										
4	1	1E6B30-13300	PLATE, REEL	2							
5	1	1E6B30-13350	RETAINER, PLATE	2							
5-1	1	1E6B30-13350-1	RETAINER, PLATE	2						S	1
	(A=*2018.12)										
6	1	26014-080202	BOLT, M8X 20	4							
7	1	26014-080202	BOLT, M8X 20	10							
8	1	26717-080002	NUT, M8	4							

Remarks
(1)Painting color=No.3-1, 5 : YANMAR NAVY GRAY, No.3-2, 5-1 : CATION E-COATING BLACK.

N:Old $\xleftarrow[\text{No}]{\text{Yes}}$ New, Q:Old $\xleftarrow[\text{Yes}]{\text{No}}$ New, R:Old $\xleftarrow[\text{Yes}]{\text{Yes}}$ New, S:Old $\xleftarrow[\text{No}]{\text{No}}$ New, W:Add, Z:Discontinued, F:Interchangeable by set, K:Q'ty Change

Copyright (C) 2018 YANMAR CO., LTD. All RightsReserved.

Fig.11. TINE BAR

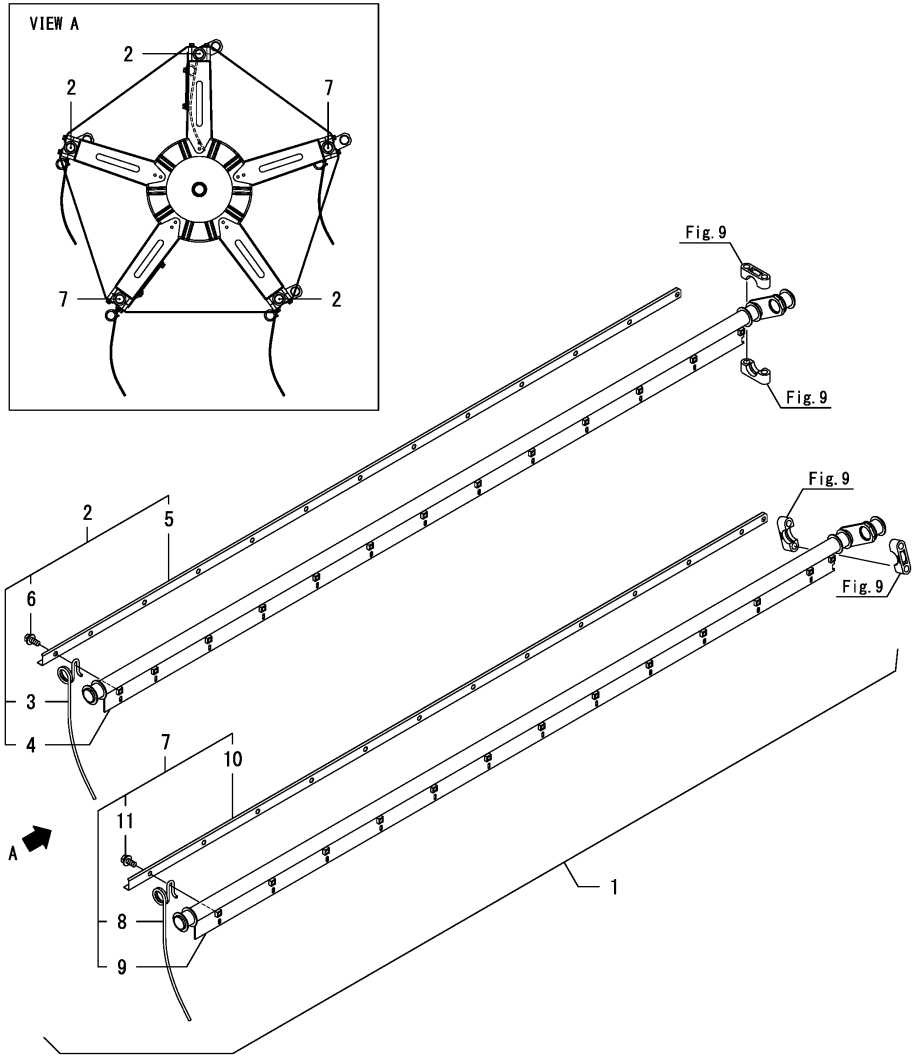

(A)=AW70GV,RSX(F)-IN (D)=
(B)= (E)=
(C)= (F)=

No.	Lev.	Parts No.	Description	Q'ty (A)	(B)	(C)	(D)	(E)	(F)	I	R
1	1	7E6C80-13400	BAR ASSY, TINE	1							
2	2	7E6C80-13450	BAR,TINE A	3							
3	3	1E6B30-13060	TINE	39							
4	3	1E6C80-13450	BAR,TINE A	3							
5	3	1E6B30-13480	COVER, TINE SA	3							
6	3	26014-080202	BOLT, M8X 20	39							
7	2	7E6C80-13520	BAR,TINE B	2							
8	3	1E6B30-13060	TINE	26							
9	3	1E6C80-13520	BAR,TINE B	2							
10	3	1E6B30-13540	COVER, TINE SB	2							
11	3	26014-080202	BOLT, M8X 20	26							

N:Old $\frac{\text{Yes}}{\text{No}}$ New, Q:Old $\frac{\text{No}}{\text{Yes}}$ New, R:Old $\frac{\text{Yes}}{\text{Yes}}$ New, S:Old $\frac{\text{No}}{\text{No}}$ New, W:Add, Z:Discontinued, F:Interchangeable by set, K:Q'ty Change

Copyright (C) 2018 YANMAR CO., LTD. All RightsReserved.

Fig.12. REEL SLIDE

(A)=AW70GV,RSX(F)-IN (D)=
(B)= (E)=
(C)= (F)=

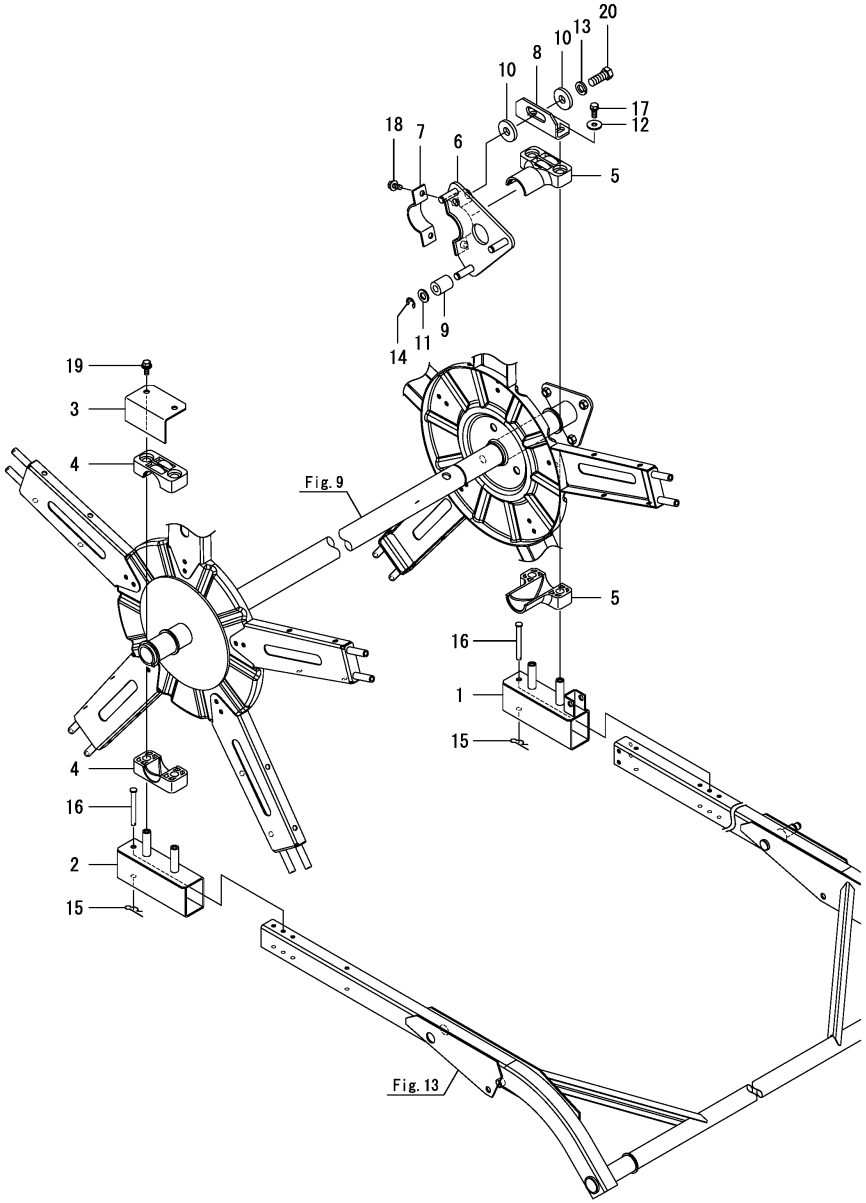

No.	Lev.	Parts No.	Description	Q'ty (A)	(B)	(C)	(D)	(E)	(F)	I	R
1	1	1E6B30-13550	SLIDER, REEL R	1							
2	1	1E6B30-13600	SLIDER, REEL L	1							
3	1	1E6B30-13611	COVER, REEL SHAFT	1							
4	1	1E6B30-13621	BRACKET, REEL L	2							
5	1	1E6B30-13631	BRACKET, REEL R	2							
6	1	1E6C85-13640	DISK,A	1							
7	1	1E6B30-13680	BASE, DISK FULCRUM A	1							
7-1	1	1E6B30-13680-1	BASE, DISK FULCRUM A	1						S	1
	(A=*2018.08)										
8	1	1E6B30-13701	PLATE, ADJUST TINE	1							
8-1	1	1E6B30-13701-1	PLATE, ADJUST TINE	1						S	1
	(A=*2018.08)										
9	1	1E6B30-13711	ROLLER, DISK	3							
10	1	1E9060-51720	WASHER, 15X40X6	2							
11	1	22137-120000	WASHER, 12	3							
12	1	22157-080000	WASHER, 8	2							
13	1	22217-140000	WASHER, SPRING 14	1							
14	1	22272-000100	RING, E-10	3							
15	1	22372-080000	PIN, SNAP 8	2							
16	1	22487-080700	PIN, H 8X 70	2							
17	1	26013-080202	BOLT, M8X 20	2							
18	1	26014-080202	BOLT, M8X 20	2							
19	1	26014-080202	BOLT, M8X 20	2							
20	1	26156-140352	BOLT, M14X 35 PLATED	1							

Remarks
(1)Painting color=No.7, 8 : YANMAR NAVY GRAY, No.7-1, 8-1 : CATION E-COATING BLACK.

N:Old $\overset{\text{Yes}}{\underset{\text{No}}{\leftrightarrows}}$ New, Q:Old $\overset{\text{No}}{\underset{\text{Yes}}{\leftrightarrows}}$ New, R:Old $\overset{\text{Yes}}{\underset{\text{Yes}}{\leftrightarrows}}$ New, S:Old $\overset{\text{No}}{\underset{\text{No}}{\leftrightarrows}}$ New, W:Add, Z:Discontinued, F:Interchangeable by set, K:Q'ty Change

Copyright (C) 2018 YANMAR CO., LTD. All RightsReserved.

Fig.13. LIFTING ARM

(A)=AW70GV,RSX(F)-IN (D)=
(B)= (E)=
(C)= (F)=

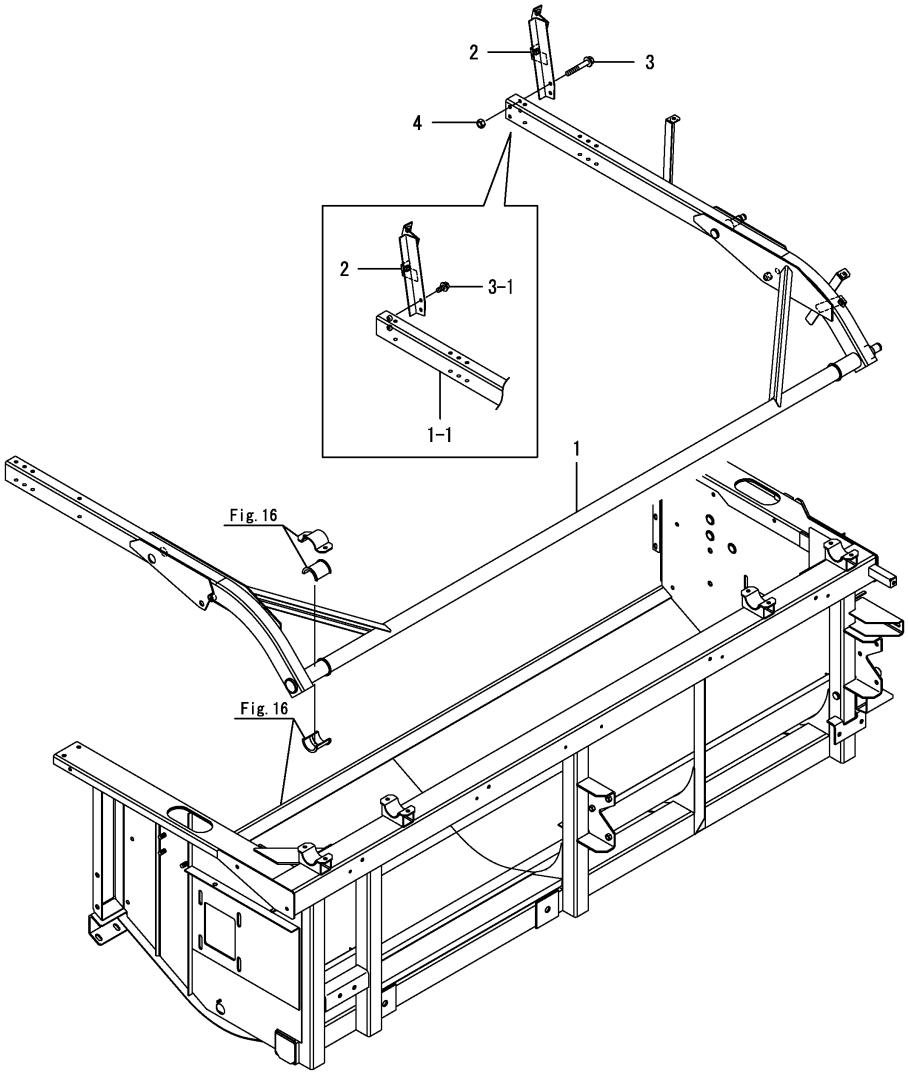

No.	Lev.	Parts No.	Description	Q'ty (A)	(B)	(C)	(D)	(E)	(F)	I	R
1	1	1E6C85-13800	ARM,LIFTING	1							
1-1	1	1E6C85-13801	ARM,LIFTING	1						F	1
	(A=F800320)										
2	1	1E6B30-13951	BRACKET, COVER C	1							
3	1	26014-080552	BOLT, M8X 55	2							
3-1	1	26014-080202	BOLT, M8X 20	2						F	1
	(A=F800320)										
4	1	26717-080002	NUT, M8	2						Z	1
	(A=F800320)										

Remarks
(1)No.1-1, 3-1 & 4 interchangeable by set.

N:Old $\xleftrightarrow[\text{No}]{\text{Yes}}$ New, Q:Old $\xleftrightarrow[\text{Yes}]{\text{No}}$ New, R:Old $\xleftrightarrow[\text{Yes}]{\text{Yes}}$ New, S:Old $\xleftrightarrow[\text{No}]{\text{No}}$ New, W:Add, Z:Discontinued, F:Interchangeable by set, K:Q'ty Change

Copyright (C) 2018 YANMAR CO., LTD. All RightsReserved.

Fig.14. REEL COUNTER

(A)=AW70GV,RSX(F)-IN (D)=
(B)= (E)=
(C)= (F)=

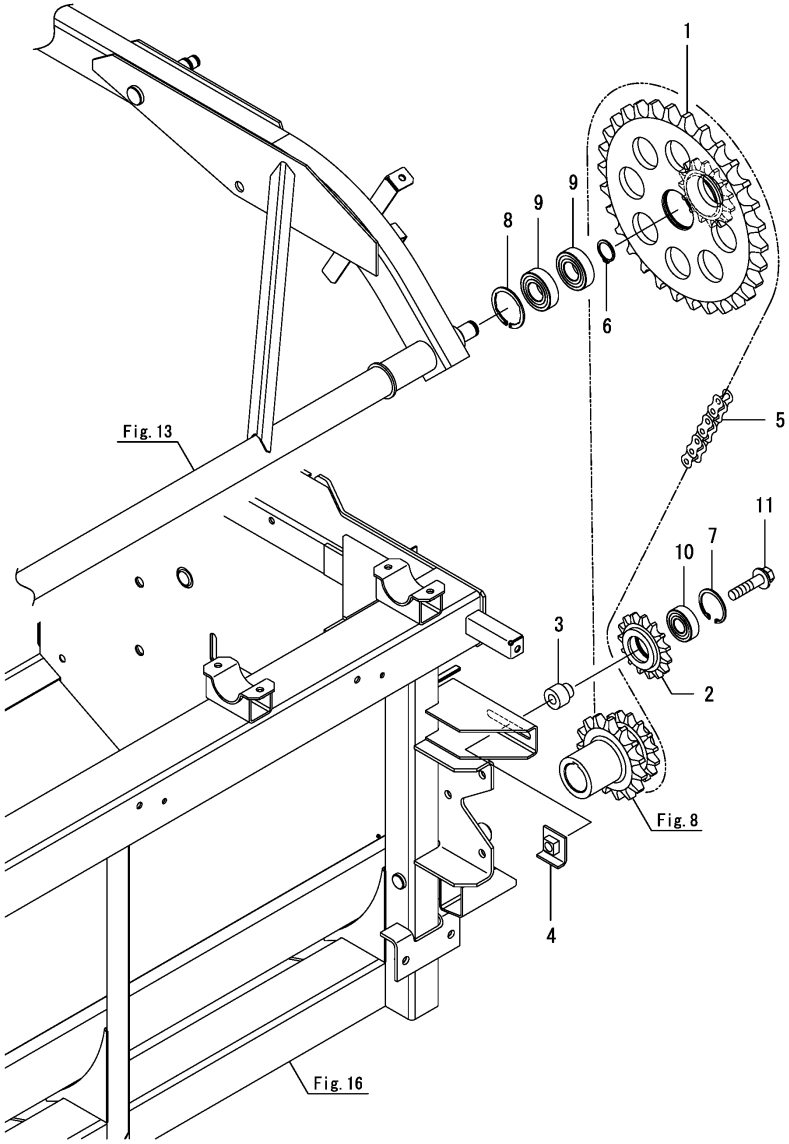

No.	Lev.	Parts No.	Description	Q'ty (A)	(B)	(C)	(D)	(E)	(F)	I	R
1	1	1E6C85-14000	SPROCKET,COUNTER	1							
1-1	1	1E6C85-14001	SPROCKET,COUNTER	1						R	
	(A=*2018.08)										
2	1	1E6B30-14050	SPROCKET, 15T	1							
3	1	1E6B30-14061-1	BUSH, TENSION	1							
4	1	1E6B30-14070	FULCRUM, COUNTER	1							
5	1	1E6C85-14100	CHAIN, 40X89L	1							
5-1	1	1E6C85-14101	CHAIN, 40X90L	1						S	
	(A=F800157)										
6	1	22242-000200	RING, 20	1							
7	1	22252-000350	RING, 35	1							
8	1	22252-000421	CIRCLIP 42	1							
9	1	24104-060044	BEARING, BALL 6004UU	2							
10	1	24104-062024	BEARING, BALL 6202UU	1							
11	1	26014-100452	BOLT, M10X 45	1							

N:Old $\frac{\text{Yes}}{\text{No}}$ New, Q:Old $\frac{\text{No}}{\text{Yes}}$ New, R:Old $\frac{\text{Yes}}{\text{Yes}}$ New, S:Old $\frac{\text{No}}{\text{No}}$ New, W:Add, Z:Discontinued, F:Interchangeable by set, K:Q'ty Change

Copyright (C) 2018 YANMAR CO., LTD. All RightsReserved.

Fig.15. REEL DRIVE

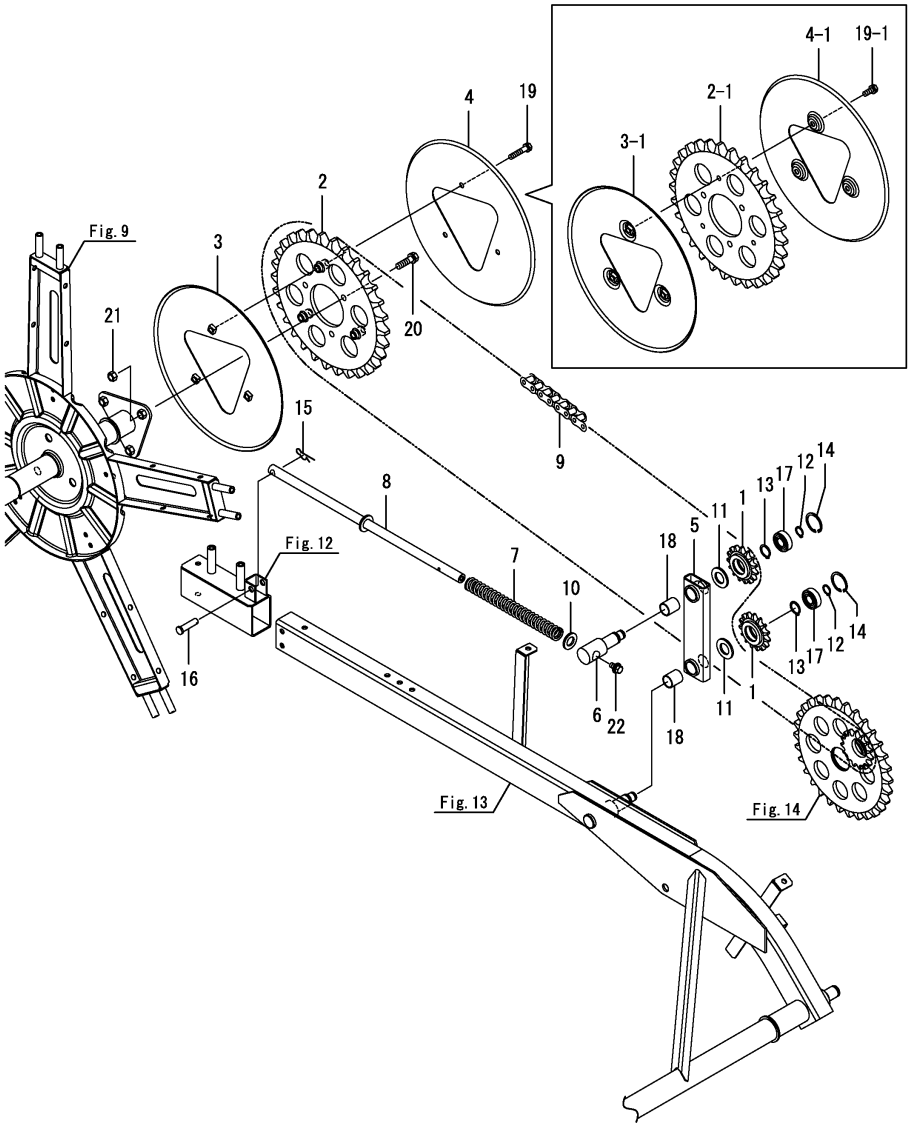

Remarks
(1)No.2-1, 3-1, 4-1 & 19-1 interchangeable by set.

(A)=AW70GV,RSX(F)-IN (D)=
(B)= (E)=
(C)= (F)=

No.	Lev.	Parts No.	Description	Q'ty (A)	(B)	(C)	(D)	(E)	(F)	I	R
1	1	1E6B30-14050	SPROCKET, 15T	2							
2	1	1E6C85-14200	SPROCKET,REEL 59T	1							
2-1	1	1E6C85-14210	SPROCKET,REEL 59T	1						F	1
	(A=F800157)										
2-2	1	1E6C85-14211	SPROCKET,REEL 59T	1						R	
	(A=*2018.08)										
3	1	1E6C85-14220	GUIDE,SPROCKET B	1							
3-1	1	1E6C85-14250	GUIDE,SPROCKET B	1						F	1
	(A=F800157)										
4	1	1E6C85-14230	GUIDE,SPROCKET BA	1							
4-1	1	1E6C85-14260	GUIDE,SPROCKET BA	1						F	1
	(A=F800157)										
5	1	1E6C80-14250	ARM,REEL TENSION	1							
6	1	1E6B30-14280	SHAFT, FULCRUM A	1							
7	1	1E6C80-14290	SPRING, TENSION	1							
8	1	1E6C85-14310	ROD, TENSION	1							
9	1	1E6C85-14400	CHAIN,40X206L	1							
9-1	1	1E6C85-14401	CHAIN,40X206L	1						N	
	(A=F800157)										
10	1	22137-160000	WASHER, 16	1							
11	1	22137-200000	WASHER, 20	2							
12	1	22242-000150	RING, 15	2							
13	1	22242-000200	RING, 20	2							
14	1	22252-000350	RING, 35	2							
15	1	22372-100000	PIN, SNAP 10	1							
16	1	22487-100350	PIN 10X 35	1							
17	1	24104-062024	BEARING, BALL 6202UU	2							
18	1	24550-020250	BUSH, 20X25	2							
19	1	26013-080402	BOLT, M8X 40	3							
19-1	1	26013-080202	BOLT, M8X 20	3						F	1
	(A=F800157)										
20	1	26013-100352	BOLT, M10X 35	3							
21	1	26717-100002	NUT, M10	3							
22	1	26014-080162	BOLT, M8X 16	1						W	
	(A=*2018.08)										

N:Old $\xleftarrow[\text{No}]{\text{Yes}}$ New, Q:Old $\xleftarrow[\text{Yes}]{\text{No}}$ New, R:Old $\xleftarrow[\text{Yes}]{\text{Yes}}$ New, S:Old $\xleftarrow[\text{No}]{\text{No}}$ New, W:Add, Z:Discontinued, F:Interchangeable by set, K:Q'ty Change

Copyright (C) 2018 YANMAR CO., LTD. All RightsReserved.

Fig.16. REAP FRAME

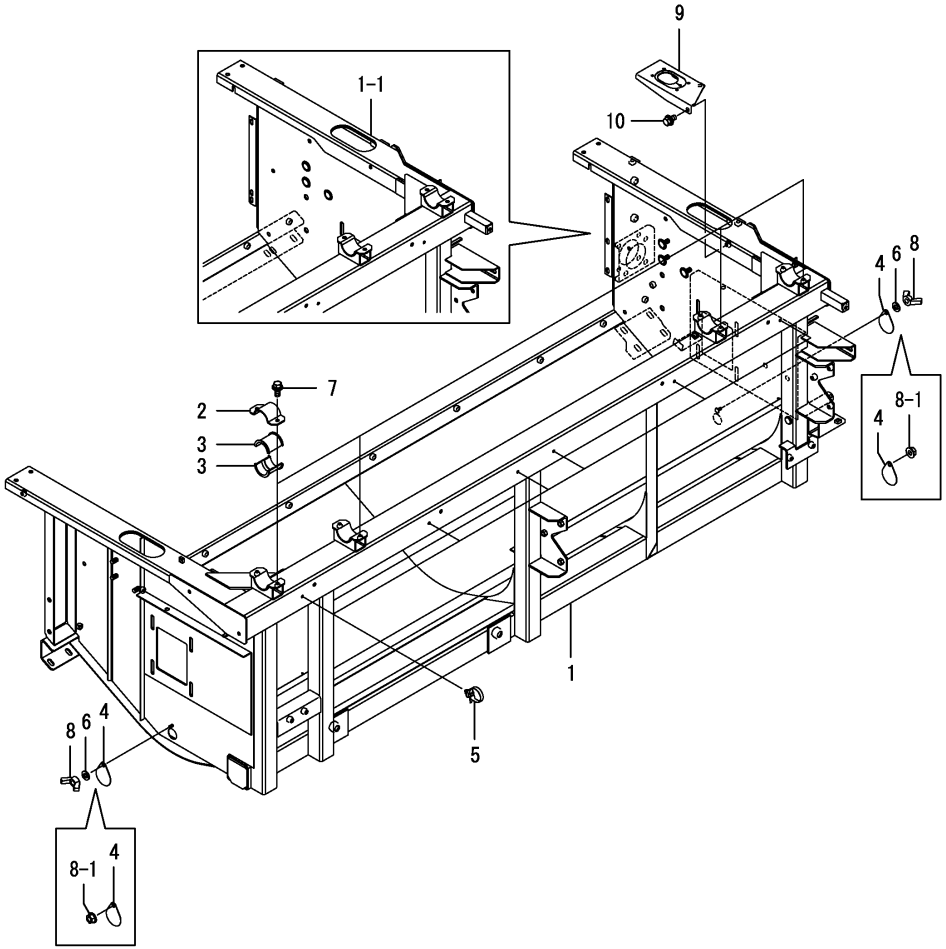

(A)=AW70GV,RSX(F)-IN (D)=
(B)= (E)=
(C)= (F)=

No.	Lev.	Parts No.	Description	Q'ty (A)	(B)	(C)	(D)	(E)	(F)	I	R
1	1	1E6C85-15000	FRAME ASSY,REAPING	1							
1-1	1	1E6C85-15001	FRAME ASSY,REAPING	1						S	
	(A=F800157)										
1-2	1	1E6C85-15002	FRAME ASSY,REAPING	1						N	
	(A=F800214)										
1-3	1	1E6C85-15003	FRAME ASSY,REAPING	1						R	
	(A=*2018.08)										
2	1	1E6B30-15041	GUIDE, LIFTING A	4							
3	1	1E6B30-16801	BUSH, LIFTING	8							
4	1	1E6C80-16850	PLATE,HOLE COVER	2							
5	1	1E9265-84300	CLIP, BAND	6							
6	1	22217-060000	WASHER, SPRING 6	2						Z	
	(A=*2018.08)										
7	1	26014-080202	BOLT, M8X 20	8							
8	1	26636-060002	NUT, WING M6	2							
8-1	1	26367-060002	NUT, M6	2						S	
	(A=*2018.08)										
9	1	1E6C80-19900	COVER ASSY, SHEET	1						W	
	(A=F800303)										
10	1	26014-080162	BOLT, M8X 16	1						W	
	(A=F800303)										

N:Old $\xleftarrow[\text{No}]{\text{Yes}}$ New, Q:Old $\xleftarrow[\text{Yes}]{\text{No}}$ New, R:Old $\xleftarrow[\text{Yes}]{\text{Yes}}$ New, S:Old $\xleftarrow[\text{No}]{\text{No}}$ New, W:Add, Z:Discontinued, F:Interchangeable by set, K:Q'ty Change

Copyright (C) 2018 YANMAR CO., LTD. All RightsReserved.

Fig.17. REAP EDGE

(A)=AW70GV,RSX(F)-IN (D)=
(B)= (E)=
(C)= (F)=

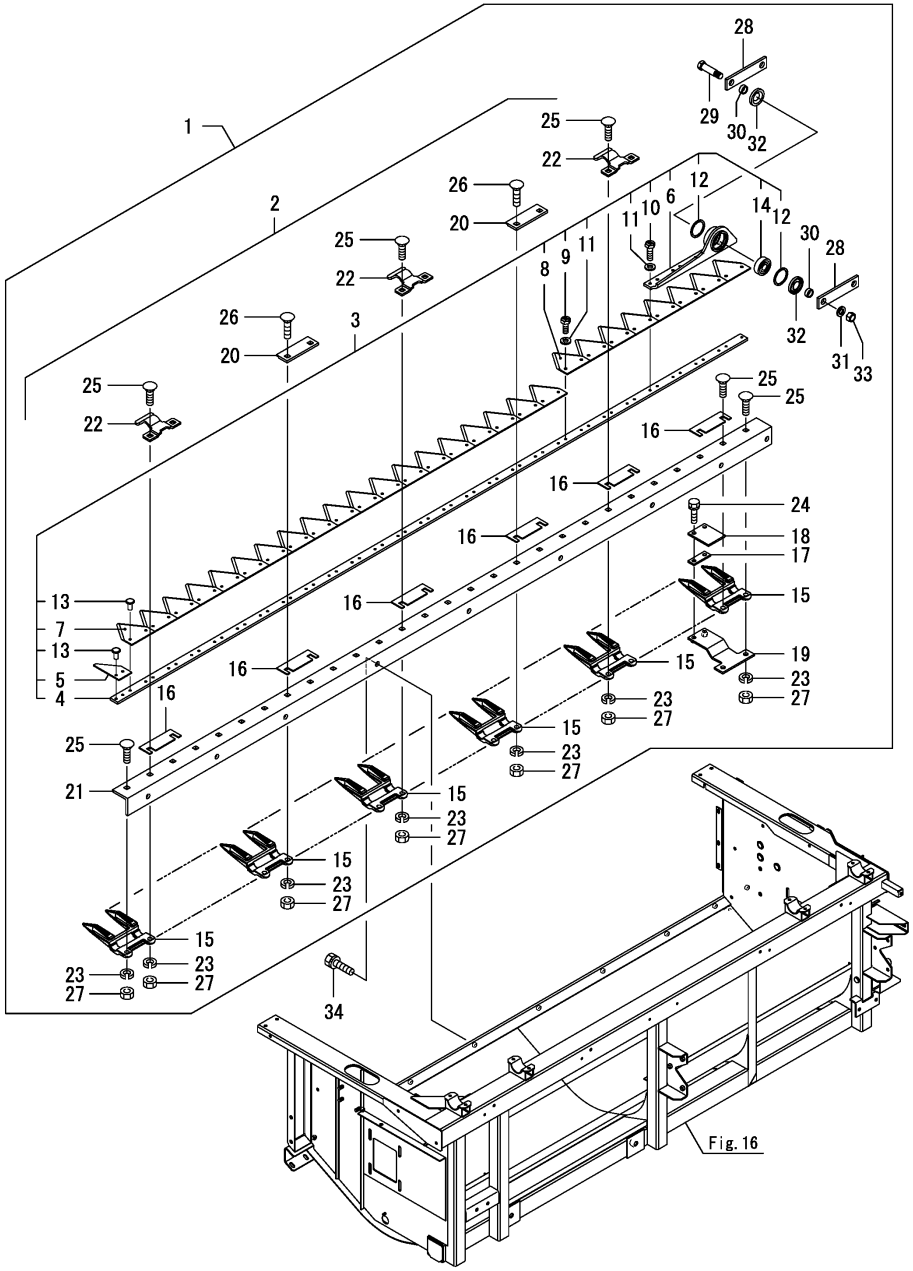

No.	Lev.	Parts No.	Description	Q'ty (A)	(B)	(C)	(D)	(E)	(F)	I	R
1	1	1E6C85-17100	REAPING EDGE ASSY,OS	1							
2	2	1E6C40-17003	REAPING EDGE ASSY,S	1							
3	3	1E6C40-17013	REAPING EDGE ASSY, S	1							
4	4	1E6B30-17021	BAR, KNIFE S	1							
5	4	1E6B30-17030	GUIDE, L	1							
6	4	1E6C40-17040	HEAD, KNIFE	1							
7	4	1E6B30-17070	REAPING EDGE	19							
8	4	1S7596-17071	REAPING EDGE, N	8							
9	4	1S7596-17080	BOLT, M6X16 11T	8							
10	4	1E6B30-17290	BOLT, M6X20 11T	8							
11	4	22217-060000	WASHER, SPRING 6	16							
12	4	22252-000421	CIRCLIP 42	2							
13	4	22641-500160	RIVET, 5.0X16	40							
14	4	24104-063024	BEARING, BALL 6302UU	1							
15	3	1E6B30-17101	BACKING EDGE, A	14							
16	3	1E6B30-17120	PLATE, FRICTION R	6							
17	3	1E6B30-17130	PLATE, 55X20X4	1							
18	3	1E6B30-17140	BACKING EDGE, B	1							
19	3	1E6B30-17151	BACKING EDGE, C	1							
20	3	1E6B30-17170	PLATE, RETAINER	2							
21	3	1E6B30-17200	BASE, BACKING EDGE S	1							
22	3	1S7596-24170	CLIP, KNIFE B	3							
23	3	22217-100000	WASHER, SPRING 10	28							
24	3	26013-080252	BOLT, M8X 25	2							
25	3	26487-100353	BOLT, M10X35	24							
26	3	26487-100403	BOLT, M10X40	4							
27	3	26717-100002	NUT, M10	28							
28	2	1E6C85-17860	PLATE, CONNECT 101	2							
29	2	1E6B30-17870	BOLT, REAMER 15X59	1							
30	2	1E6B30-17890	SLEEVE, 20X15X9	2							
31	2	22217-140000	WASHER, SPRING 14	1							
32	2	24430-204206	SEAL, OIL VC204206	2							
33	2	26717-140002	NUT, M14	1							
34	1	26013-100252	BOLT, M10X 25	9							

N:Old $\xleftrightarrow[\text{No}]{\text{Yes}}$ New, Q:Old $\xleftrightarrow[\text{Yes}]{\text{No}}$ New, R:Old $\xleftrightarrow[\text{Yes}]{\text{Yes}}$ New, S:Old $\xleftrightarrow[\text{No}]{\text{No}}$ New, W:Add, Z:Discontinued, F:Interchangeable by set, K:Q'ty Change

Copyright (C) 2018 YANMAR CO., LTD. All RightsReserved.

Fig.18. REAP EDGE DRIVE

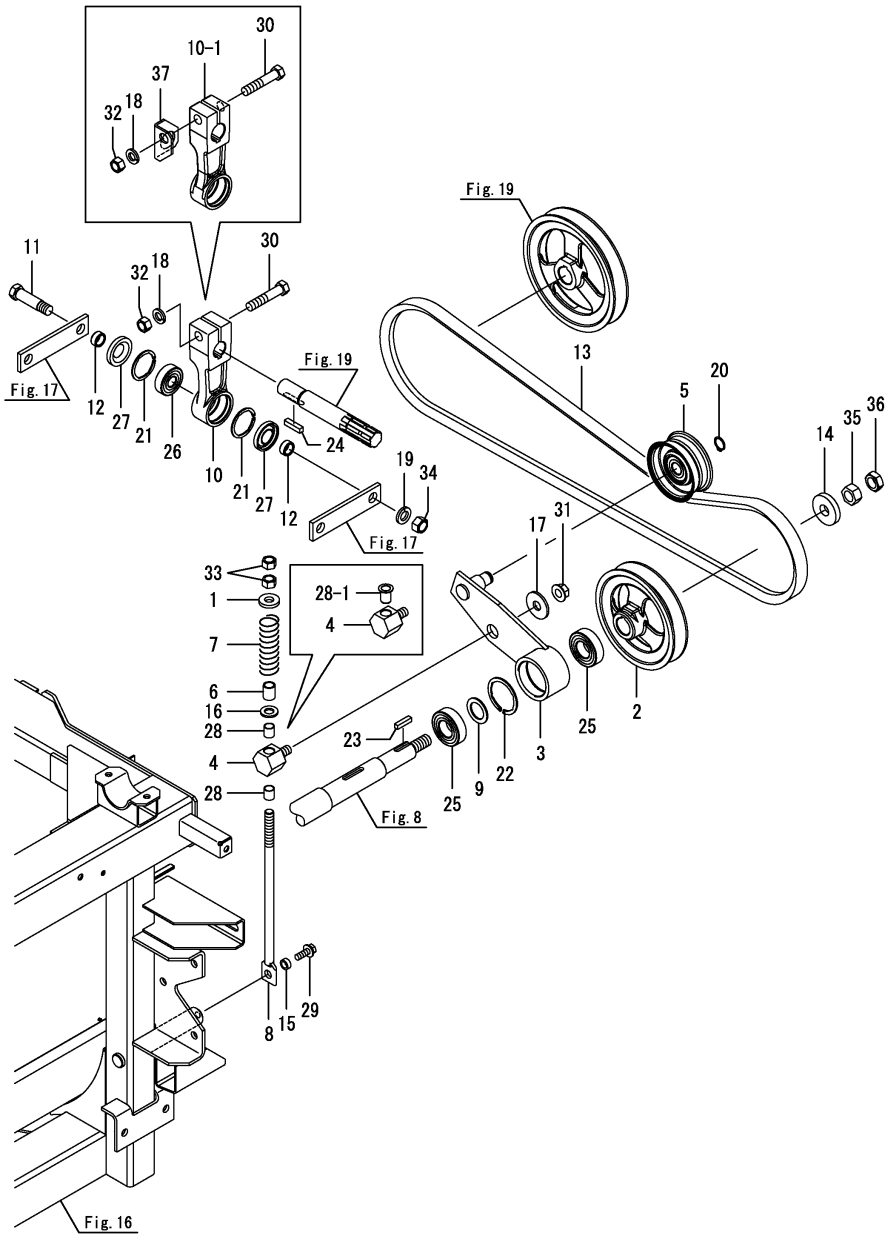

(A)=AW70GV,RSX(F)-IN (D)=
(B)= (E)=
(C)= (F)=

No.	Lev.	Parts No.	Description	Q'ty (A)	(B)	(C)	(D)	(E)	(F)	I	R
1	1	1E8559-12500	WASHER, 12X28X4.5	1							
1-1	1	1E6C85-17580	SHOE,SPRING	1						N	
	(A=F800157)										
2	1	1E6C85-17430	V-PULLEY,150C1	1							
3	1	1E6C85-17450	ARM,EDGE TENSION	1							
4	1	1E6C85-17490	PIN, ARM	1							
5	1	1E6C85-17500	ROLLER,TENSION 80	1							
6	1	1E6C85-17521	COLLAR,TENSION	1							
7	1	1E6C85-17530	SPRING,25X85	1							
8	1	1E6C85-17550	BOLT,TENSION 12X272	1							
9	1	1E6C85-17570	COLLAR,25.5X38X2	1							
10	1	1E6C85-17850	ARM, CD	1							
10-1	1	1E6C85-17851	ARM, CD	1						F	1
	(A=F800103)										
11	1	1E6B30-17870	BOLT, REAMER 15X59	1							
12	1	1E6B30-17890	SLEEVE, 20X15X9	2							
13	1	1E6C80-36370	V-BELT, LC70-AG8	1							
13-1	1	1E6C85-17560	V-BELT,SC70 REC H-P4	1						N	
	(A=F800063)										
14	1	1E6B30-36560	COLLAR, 16.5X45X8	1							
15	1	1E8559-75030	SPACER, 5	1							
16	1	22137-120000	WASHER, 12	1							
17	1	22157-120000	WASHER, 12	1							
18	1	22217-120000	WASHER, SPRING 12	1							
19	1	22217-140000	WASHER, SPRING 14	1							
20	1	22242-000170	RING, 17	1							
21	1	22252-000421	CIRCLIP 42	2							
22	1	22252-000521	RING, 52	1							
23	1	22551-070250	KEY, 7X 25	1							
24	1	22551-070300	KEY, 7X 30	1							
25	1	24104-062054	BEARING, BALL 6205UU	2							
26	1	24104-063024	BEARING, BALL 6302UU	1							
27	1	24430-204206	SEAL, OIL VC204206	2							
28	1	24550-012150	BUSH, 12X15	2							
28-1	1	1E6C85-17590	BUSH, 12X20	1						N	
	(A=F800157)										
29	1	26014-080252	BOLT, M8X 25	1							
30	1	26116-120602	BOLT, M12X 60 PLATED	1							
31	1	26367-120002	NUT, M12	1							
32	1	26717-120002	NUT, M12	1							
33	1	26717-120002	NUT, M12	2							
34	1	26717-140002	NUT, M14	1							
35	1	26737-160002	NUT, M16	1							
36	1	26777-160002	NUT, LOCK M16	1							
37	1	1E6C85-17870	PLATE, ARM CD	1						W	1
	(A=F800103)										

Remarks
(1)No.10-1, 37 Fig.160 No.9-1 interchangeable by set.

N:Old $\frac{\text{Yes}}{\text{No}}$ New, Q:Old $\frac{\text{No}}{\text{Yes}}$ New, R:Old $\frac{\text{Yes}}{\text{Yes}}$ New, S:Old $\frac{\text{No}}{\text{No}}$ New, W:Add, Z:Discontinued, F:Interchangeable by set, K:Q'ty Change

Copyright (C) 2018 YANMAR CO., LTD. All RightsReserved.

Fig.19. REAP EDGE DRIVE CASE

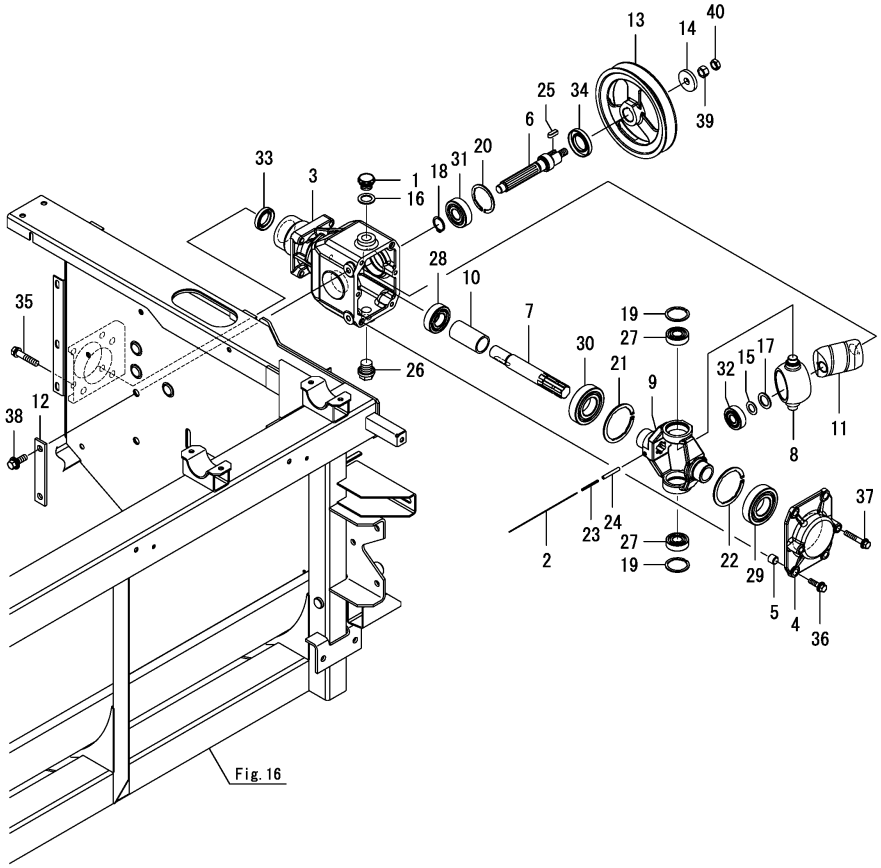

(A)=AW70GV,RSX(F)-IN (D)=
(B)= (E)=
(C)= (F)=

No.	Lev.	Parts No.	Description	Q'ty (A)	(B)	(C)	(D)	(E)	(F)	I	R
1	1	195295-13210	PLUG, OIL	1							
1-1	1	1E6B30-35120	PLUG, OIL	1						R	
	(A=F800049)										
2	1	1E6680-13890	WIRE, STAINLESS 1.2	1							
3	1	1E6682-17053	CASE, REAP.EDGE DRV	1							
4	1	1E6682-17070	COVER	1							
5	1	1E6682-17080	BUSH, 9X12X11	2							
6	1	1E6680-17100	SHAFT, CD 1	1							
7	1	1E6680-17110	SHAFT, CD 2	1							
8	1	1E6680-17130	YOKE, INNER	1							
9	1	1E6682-17140	YOKE	1							
10	1	1E6680-17150	COLLAR, 27.6X34X66	1							
11	1	1E9111-17150	MASS, ECCENTRIC	1							
12	1	1E6C85-17420	STAY,DRIVE CASE	1							
13	1	1E6C85-17440	V-PULLEY,175C1	1							
14	1	1E6C85-17540	COLLAR, 12.5X40X6	1							
15	1	1E4110-24010	LINER, 15	1							
16	1	1A1120-28170	PACKING, OIL PLUG 20	1							
17	1	1E6140-51170	SPACER, 20X30X2	1							
18	1	22242-000200	RING, 20	1							
19	1	22252-000401	RING, 40	2							
20	1	22252-000521	RING, 52	1							
21	1	22252-000721	RING, 72	1							
22	1	22252-000721	RING, 72	1							
23	1	22351-030040	PIN, SPRING 3.0X40	1							
24	1	22351-050040	PIN, SPRING 5.0X40	1							
25	1	22551-070201	KEY, 7X 20	1							
26	1	23490-200002	PLUG, 20	1							
27	1	24101-062034	BEARING, BALL 6203	2							
28	1	24101-062054	BEARING, BALL 6205	1							
29	1	24101-062074	BEARING, BALL 6207	1							
30	1	24101-062074	BEARING, BALL 6207	1							
31	1	24101-063024	BEARING, BALL 6302	1							
32	1	24101-063044	BEARING, BALL 6304	1							
33	1	24421-254208	SEAL, OIL TC254208	1							
34	1	24421-305208	SEAL, OIL TC305208	1							
35	1	26013-100502	BOLT, M10X 50	4							
36	1	26014-080302	BOLT, M8X 30	4							
37	1	26014-080502	BOLT, M8X 50	2							
38	1	26014-100302	BOLT, M10X 30	2							
39	1	26737-120002	NUT, M12	1							
40	1	26777-120002	NUT, LOCK M12	1							

Remarks
* This item is applicable to [(A)=F800062] or previous machines(Refer to Fig.160).

N:Old ←Yes/No→ New, Q:Old ←No/Yes→ New, R:Old ←Yes/Yes→ New, S:Old ←No/No→ New, W:Add, Z:Discontinued, F:Interchangeable by set, K:Q'ty Change

Copyright (C) 2018 YANMAR CO., LTD. All RightsReserved.

Fig.160. (19A)REAP EDGE DRIVE CASE

(A)=AW70GV,RSX(F)-IN (D)=
(B)= (E)=
(C)= (F)=

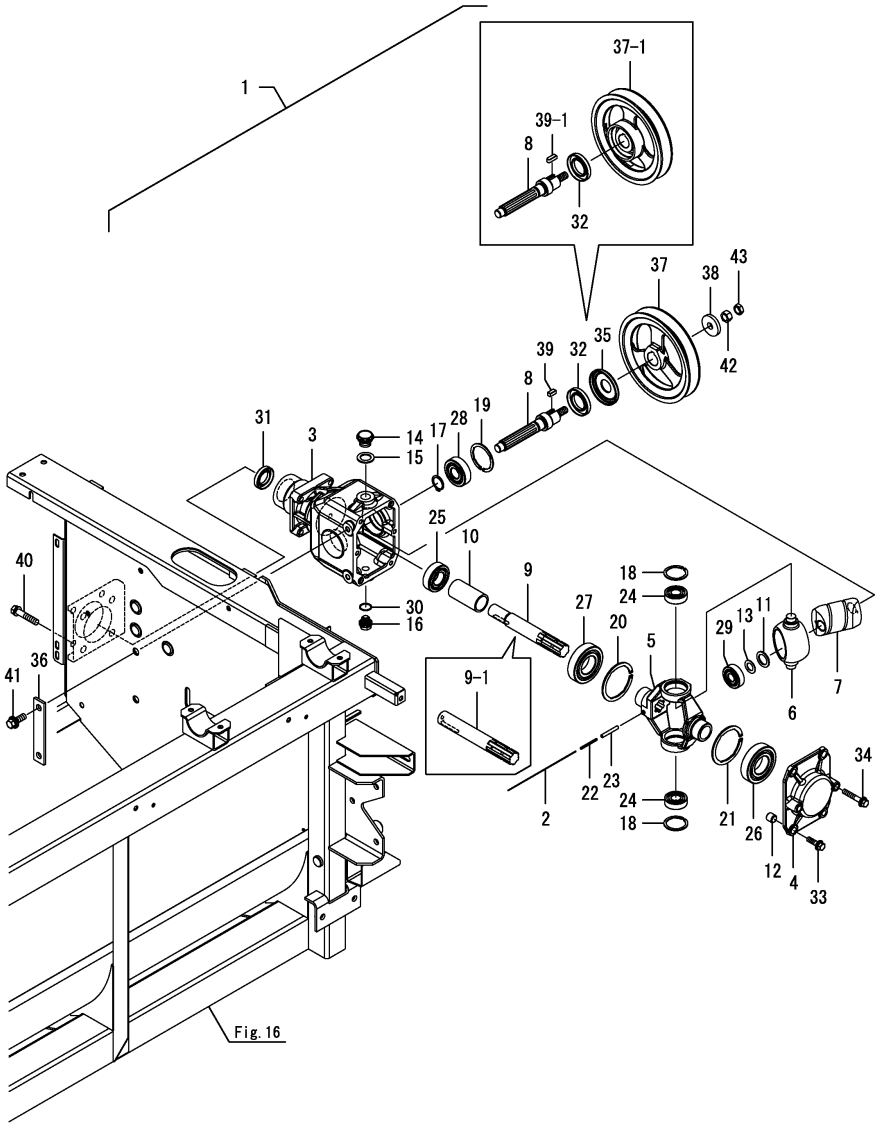

No.	Lev.	Parts No.	Description	Q'ty (A)	(B)	(C)	(D)	(E)	(F)	I	R
1	1	7E6C80-17400	CASE ASSY,EDGE DRIVE	1							
2	2	1E6680-13890	WIRE, STAINLESS 1.2	1							
3	2	1E6C85-17300	CASE,EDGE DRIVE	1							
4	2	1E6C85-17310	COVER,DRIVE CASE	1							
5	2	1E6C85-17320	YOKE	1							
6	2	1E6C85-17330	YOKE,INNER	1							
7	2	1E6C85-17340	MASS,ECCENTRIC	1							
8	2	1E6C85-17350	SHAFT,CD1	1							
9	2	1E6C85-17360	SHAFT,CD2	1							
9-1	2	1E6C85-17361	SHAFT,CD2	1						F	2
	(A=F800103)										
10	2	1E6C85-17370	COLLAR, 27.6X34X66	1							
11	2	1E6C85-17380	SPACER,20X30X2	1							
12	2	1E6C85-17390	BUSH, 9X12X11	2							
13	2	1E4110-24010	LINER, 15	1							
14	2	1E6B30-35120	PLUG, OIL	1							
15	2	1E6B30-35130	PACKING, PLUG 20	1							
16	2	1E8559-66300	PLUG, OIL 14	1							
17	2	22242-000200	RING, 20	1							
18	2	22252-000401	RING, 40	2							
19	2	22252-000521	RING, 52	1							
20	2	22252-000721	RING, 72	1							
21	2	22252-000721	RING, 72	1							
22	2	22351-030040	PIN, SPRING 3.0X40	1							
23	2	22351-050040	PIN, SPRING 5.0X40	1							
24	2	24101-062034	BEARING, BALL 6203	2							
25	2	24101-062054	BEARING, BALL 6205	1							
26	2	24101-062074	BEARING, BALL 6207	1							
27	2	24101-062074	BEARING, BALL 6207	1							
28	2	24101-063024	BEARING, BALL 6302	1							
29	2	24101-063044	BEARING, BALL 6304	1							
30	2	24311-000160	O-RING, 1AP16.0	1							
31	2	24421-254208	SEAL, OIL TC254208	1							
32	2	24421-305208	SEAL, OIL TC305208	1							
33	2	26014-080302	BOLT, M8X 30	4							
34	2	26014-080502	BOLT, M8X 50	2							
35	1	1E6C85-17400	METAL, SEAL	1						Z	
	(A=F800303)										
36	1	1E6C85-17420	STAY,DRIVE CASE	1							
37	1	1E6C85-17441	V-PULLEY,175C1	1							
37-1	1	1E6C85-17410	V-PULLEY,175C1	1						F	1
	(A=F800303)										
38	1	1E6C85-17540	COLLAR, 12.5X40X6	1							
39	1	22551-070150	KEY, 7X 15	1							
39-1	1	22551-070201	KEY, 7X 20	1						F	1
	(A=F800303)										
40	1	26013-100502	BOLT, M10X 50	4							
41	1	26014-100302	BOLT, M10X 30	2							
42	1	26737-120002	NUT, M12	1							
43	1	26777-120002	NUT, LOCK M12	1							

Remarks
* This item is applicable to [(A)=F800063] or following machines(Refer to Fig.19).
(1)No.37-1, 39-1 interchangeable by set.
(2)No.9-1, Fig.18 No.10-1, 37 interchangeable by set.

N:Old $\overset{\text{Yes}}{\underset{\text{No}}{\leftrightarrow}}$ New, Q:Old $\overset{\text{No}}{\underset{\text{Yes}}{\leftrightarrow}}$ New, R:Old $\overset{\text{Yes}}{\underset{\text{Yes}}{\leftrightarrow}}$ New, S:Old $\overset{\text{No}}{\underset{\text{No}}{\leftrightarrow}}$ New, W:Add, Z:Discontinued, F:Interchangeable by set, K:Q'ty Change

Copyright (C) 2018 YANMAR CO., LTD. All RightsReserved.

Fig.20. DIVIDER

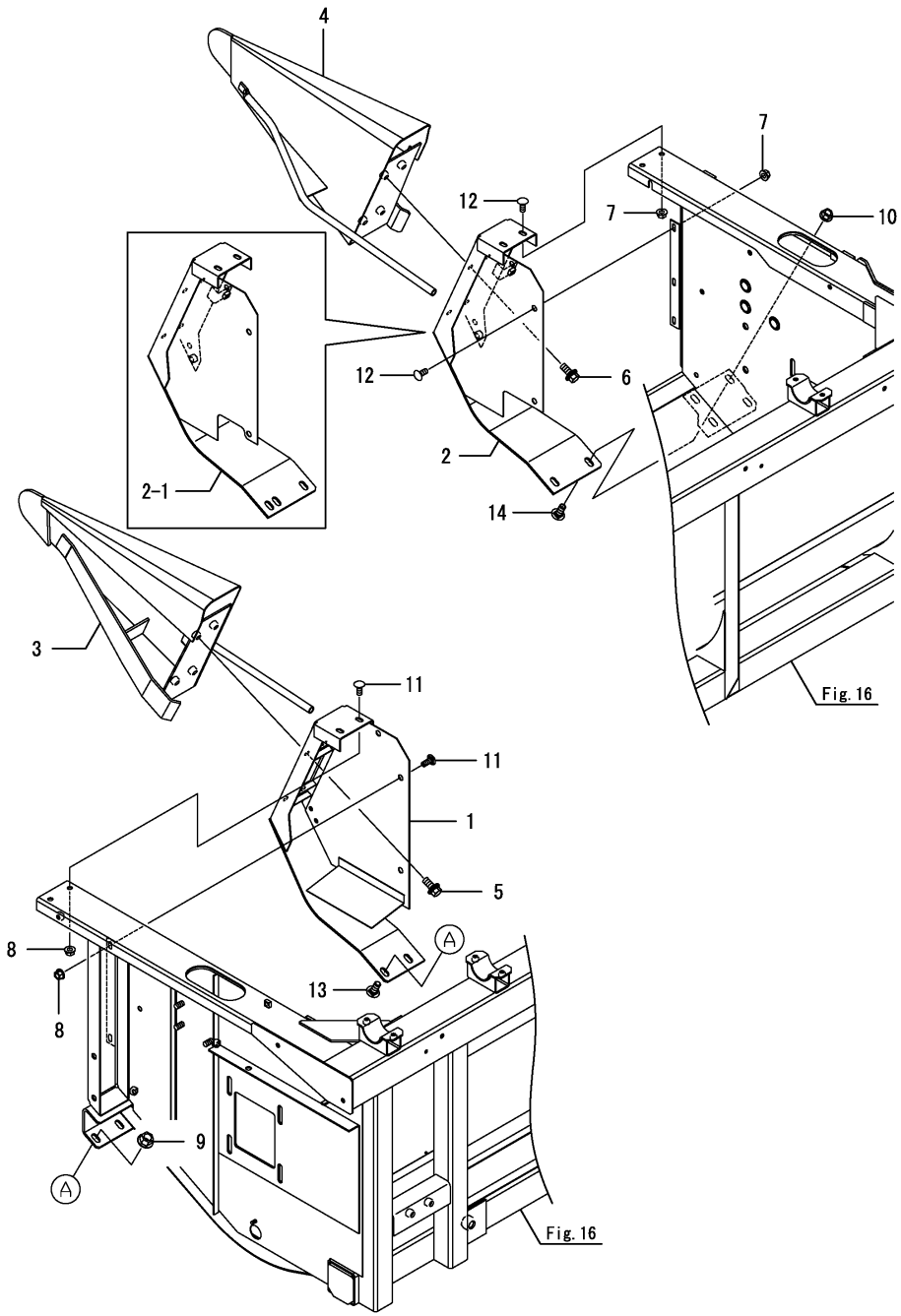

(A)=AW70GV,RSX(F)-IN (D)=
(B)= (E)=
(C)= (F)=

No.	Lev.	Parts No.	Description	Q'ty (A)	(B)	(C)	(D)	(E)	(F)	I	R
1	1	1E6B30-18004	BRACKET, DIVIDER L	1							
2	1	1E6B30-18203	BRACKET, DIVIDER R	1							
2-1	1	1E6C85-18200	BRACKET, DIVIDER R	1						S	
	(A=F800157)										
3	1	1E6B35-18500-2	DIVIDER,L	1							
4	1	1E6B35-18700-2	DIVIDER,R	1							
5	1	26014-100252	BOLT, M10X 25	4							
6	1	26014-100252	BOLT, M10X 25	4							
7	1	26367-080002	NUT, M8	5							
8	1	26367-080002	NUT, M8	5							
9	1	26367-100002	NUT, M10	2							
10	1	26367-100002	NUT, M10	2							
11	1	26487-080202	BOLT, M8X20	5							
12	1	26487-080202	BOLT, M8X20	5							
13	1	26487-100253	BOLT, M10X25	2							
14	1	26487-100253	BOLT, M10X25	2							

N:Old $\xleftarrow[\text{No}]{\text{Yes}}$ New, Q:Old $\xleftarrow[\text{Yes}]{\text{No}}$ New, R:Old $\xleftarrow[\text{Yes}]{\text{Yes}}$ New, S:Old $\xleftarrow[\text{No}]{\text{No}}$ New, W:Add, Z:Discontinued, F:Interchangeable by set, K:Q'ty Change

Copyright (C) 2018 YANMAR CO., LTD. All RightsReserved.

Fig.21. REEL COVER

(A)=AW70GV,RSX(F)-IN (D)=
(B)= (E)=
(C)= (F)=

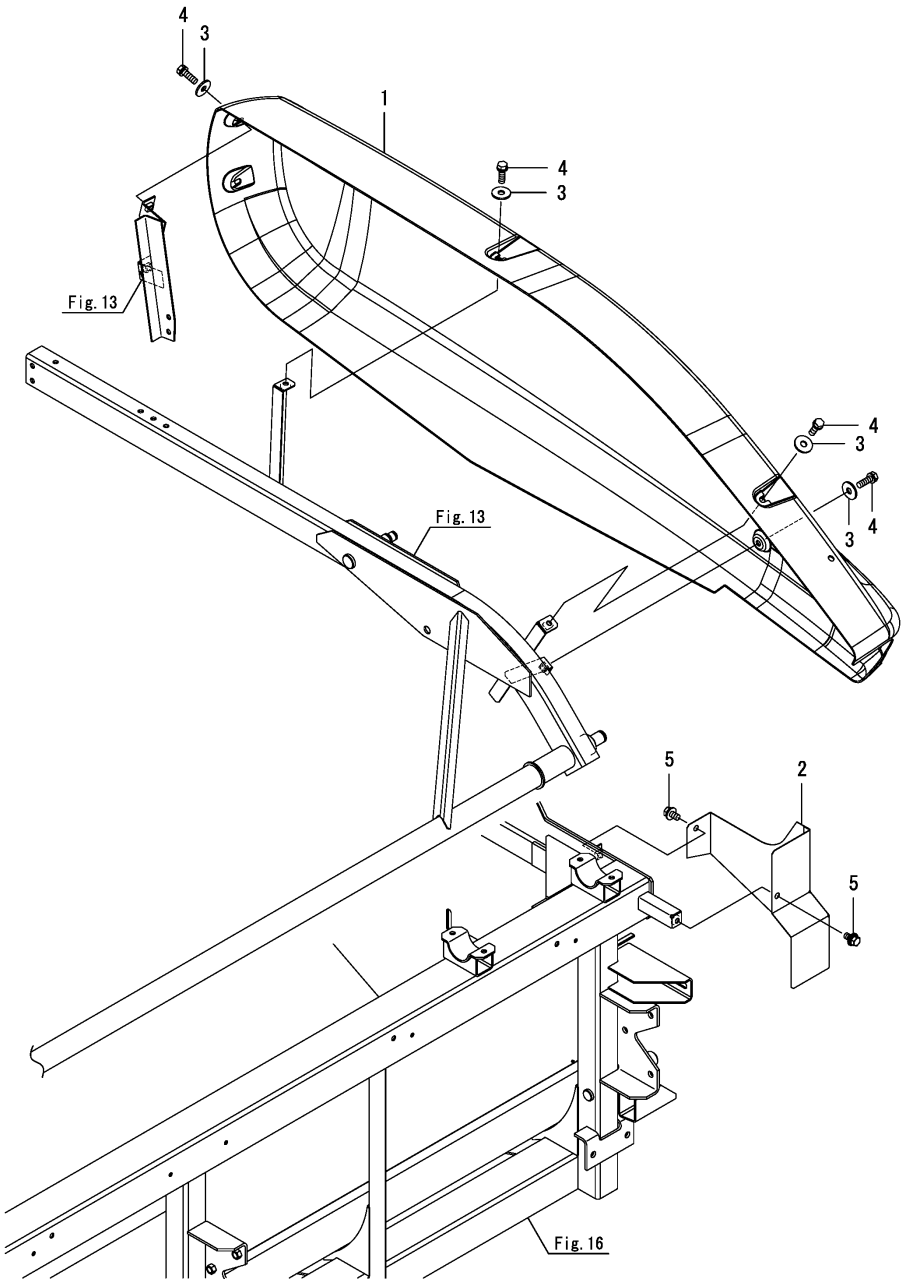

No.	Lev.	Parts No.	Description	Q'ty (A)	(B)	(C)	(D)	(E)	(F)	I	R
1	1	1E6C85-19300	COVER,REEL	1							
2	1	1E6C85-19500	COVER,COUNTER	1							
3	1	22157-080000	WASHER, 8	5							
4	1	26013-080252	BOLT, M8X 25	5							
5	1	26014-080162	BOLT, M8X 16	2							

N:Old ◄Yes/No► New, Q:Old ◄No/Yes► New, R:Old ◄Yes/Yes► New, S:Old ◄No/No► New, W:Add, Z:Discontinued, F:Interchangeable by set, K:Q'ty Change

Copyright (C) 2018 YANMAR CO., LTD. All RightsReserved.

Fig.22. SIDE COVER(PLATFORM)(RIGHT)

(A)=AW70GV,RSX(F)-IN (D)=
(B)= (E)=
(C)= (F)=

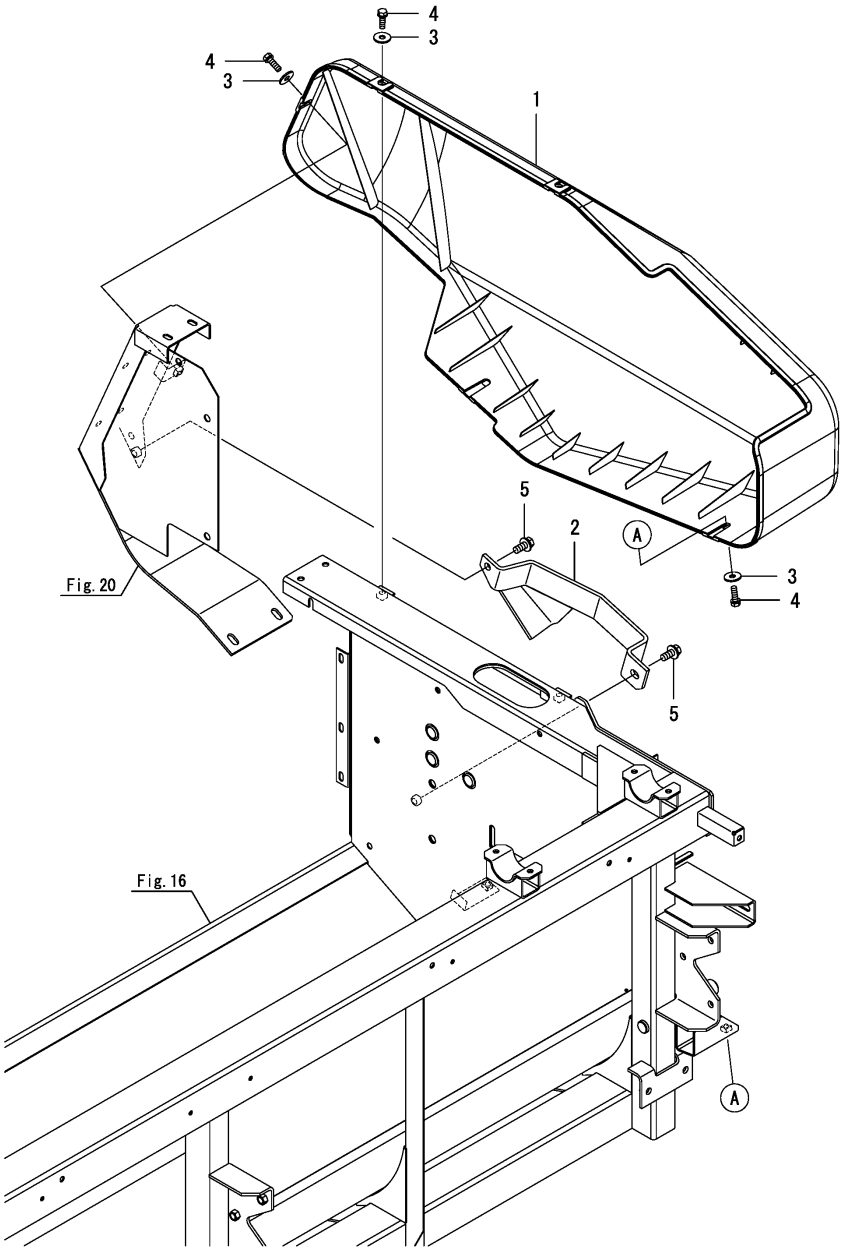

No.	Lev.	Parts No.	Description	Q'ty (A)	(B)	(C)	(D)	(E)	(F)	I	R
1	1	1E6C85-19800	COVER,PF SIDE R	1							
1-1	1	1E6C85-19801	COVER,PF SIDE R	1						N	
	(A=F800303)										
2	1	1E6C40-19850	GUIDE, PF	1							
3	1	22157-080000	WASHER, 8	5							
4	1	26013-080252	BOLT, M8X 25	5							
5	1	26014-100252	BOLT, M10X 25	2							

N:Old $\overset{\text{Yes}}{\underset{\text{No}}{\leftrightarrows}}$ New, Q:Old $\overset{\text{No}}{\underset{\text{Yes}}{\leftrightarrows}}$ New, R:Old $\overset{\text{Yes}}{\underset{\text{Yes}}{\leftrightarrows}}$ New, S:Old $\overset{\text{No}}{\underset{\text{No}}{\leftrightarrows}}$ New, W:Add, Z:Discontinued, F:Interchangeable by set, K:Q'ty Change

Copyright (C) 2018 YANMAR CO., LTD. All RightsReserved.

Fig.23. RAKE-IN DRIVE

(A)=AW70GV,RSX(F)-IN (D)=
(B)= (E)=
(C)= (F)=

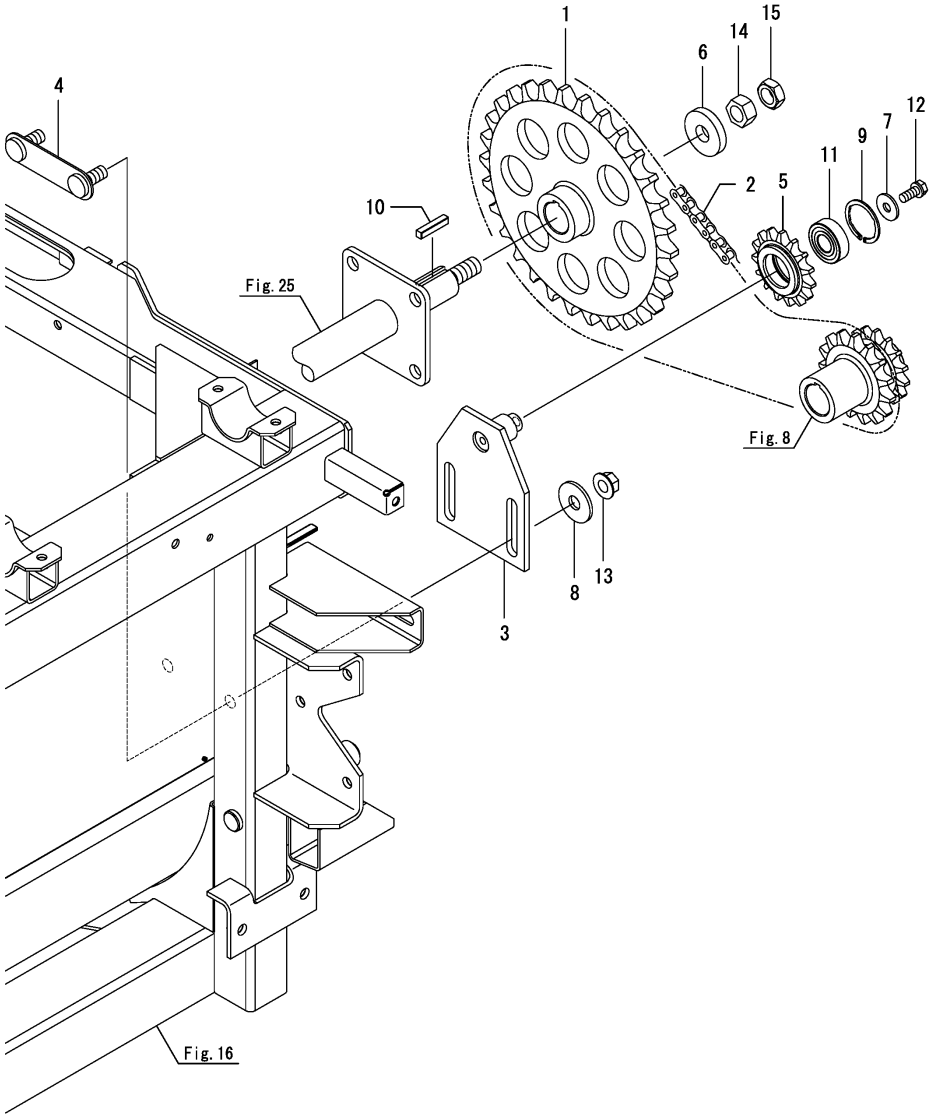

No.	Lev.	Parts No.	Description	Q'ty (A)	(B)	(C)	(D)	(E)	(F)	I	R
1	1	1E6C85-21030	SPROCKET,44T	1							
1-1	1	1E6C85-21031	SPROCKET,44T	1						R	
	(A=*2018.08)										
2	1	1E6C85-21040	CHAIN, 50X82L	1							
3	1	1E6C85-21500	PLATE ASSY,TENSION	1							
4	1	1E6C80-21550	STAY,TENSION	1							
5	1	1E6B30-36530	SPROCKET, 13 TENSION	1							
6	1	1E6B30-36560	COLLAR, 16.5X45X8	1							
7	1	22157-080000	WASHER, 8	1							
8	1	22157-120000	WASHER, 12	2							
9	1	22252-000401	RING, 40	1							
10	1	22551-070350	KEY, 7X 35	1							
11	1	24104-062034	BEARING, BALL 6203UU	1							
12	1	26013-080202	BOLT, M8X 20	1							
13	1	26367-120002	NUT, M12	2							
14	1	26737-160002	NUT, M16	1							
15	1	26777-160002	NUT, LOCK M16	1							

N:Old $\xleftarrow[\text{No}]{\text{Yes}}$ New, Q:Old $\xleftarrow[\text{Yes}]{\text{No}}$ New, R:Old $\xleftarrow[\text{Yes}]{\text{Yes}}$ New, S:Old $\xleftarrow[\text{No}]{\text{No}}$ New, W:Add, Z:Discontinued, F:Interchangeable by set, K:Q'ty Change

Copyright (C) 2018 YANMAR CO., LTD. All RightsReserved.

Fig.24. AUGER(PLATFORM)

(A)=AW70GV,RSX(F)-IN (D)=
(B)= (E)=
(C)= (F)=

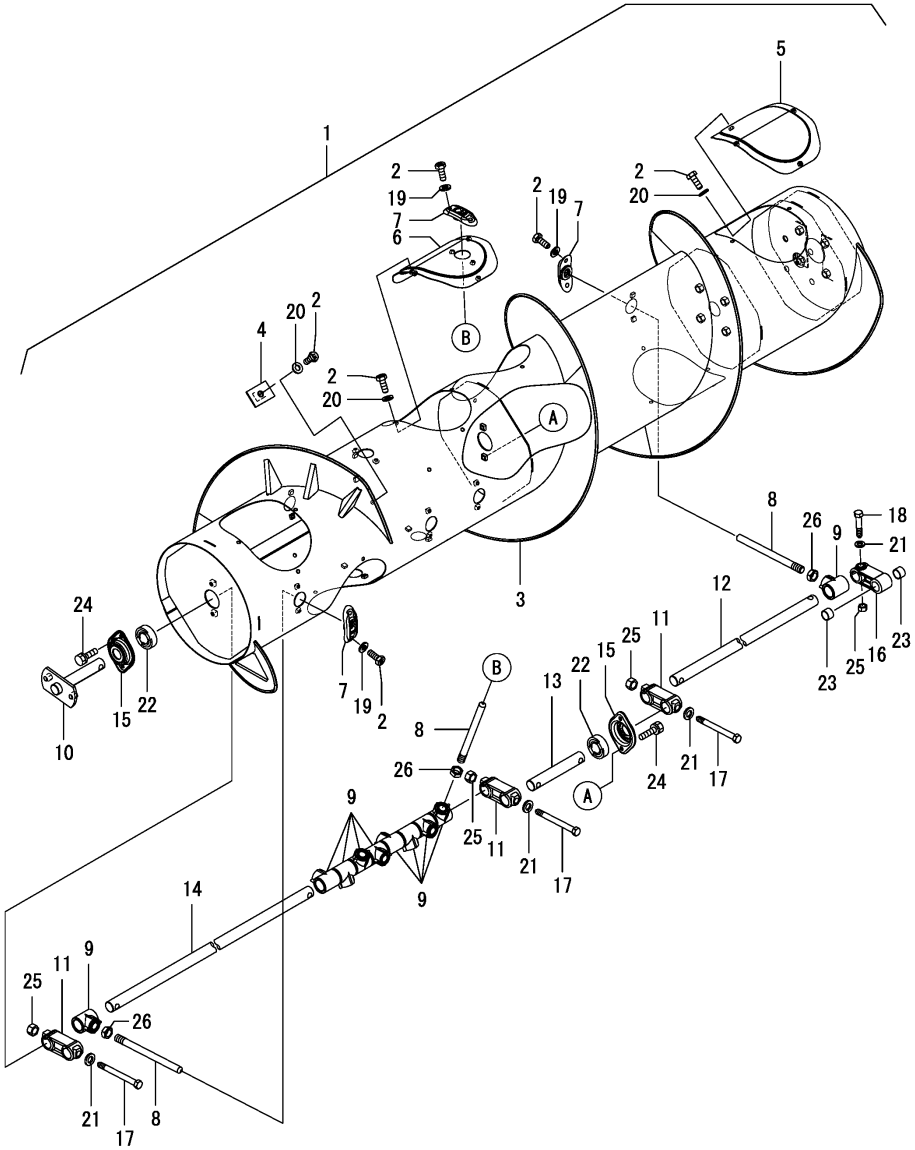

No.	Lev.	Parts No.	Description	Q'ty (A)	(B)	(C)	(D)	(E)	(F)	I	R
1	1	1E6C80-23000	AUGER ASSY,PF	1							
2	2	1S7596-17080	BOLT, M6X16 11T	57							
3	2	1E6C80-22000	AUGER,PLATFORM	1							
4	2	1E6B30-22230	STAY,SPIKE	12							
5	2	1E6B30-22280	COVER, CLEANER A	5							
6	2	1E6C80-22360	COVER,CLEANER C	1							
7	2	1E6B30-22400	GUIDE, FINGER	10							
8	2	1E6B30-22410	FINGER	10							
9	2	1E6B30-22421	BEARING, FINGER	10							
10	2	1E6C80-22500	SHAFT ASSY,ADJUST	1							
11	2	1E6B30-22530	DRIVER, FINGER	3							
12	2	1E6C80-22540	SHAFT,FINGER R	1							
13	2	1E6C80-22550	SHAFT,FINGER C	1							
14	2	1E6C80-22560	SHAFT,FINGER L	1							
15	2	1E6C40-22570	HOLDER,BB6205	2							
16	2	1E6B30-22600	CONNECTOR	1							
17	2	1E6B30-22612	BOLT, FINGER A	3							
18	2	1E6B30-22621	BOLT, FINGER B	1							
19	2	22137-060000	WASHER, 6	20							
20	2	22217-060000	WASHER, SPRING 6	37							
21	2	22217-120000	WASHER, SPRING 12	4							
22	2	24104-062054	BEARING, BALL 6205UU	2							
23	2	24550-020150	BUSH, 20X15	2							
24	2	26013-080162	BOLT, M8X 16	4							
25	2	26717-120002	NUT, M12	4							
26	2	26777-160002	NUT, LOCK M16	10							

N:Old $\xleftrightarrow[\text{No}]{\text{Yes}}$ New, Q:Old $\xleftrightarrow[\text{Yes}]{\text{No}}$ New, R:Old $\xleftrightarrow[\text{Yes}]{\text{Yes}}$ New, S:Old $\xleftrightarrow[\text{No}]{\text{No}}$ New, W:Add, Z:Discontinued, F:Interchangeable by set, K:Q'ty Change

Copyright (C) 2018 YANMAR CO., LTD. All RightsReserved.

Fig.25. ADJUST

(A)=AW70GV,RSX(F)-IN (D)=
(B)= (E)=
(C)= (F)=

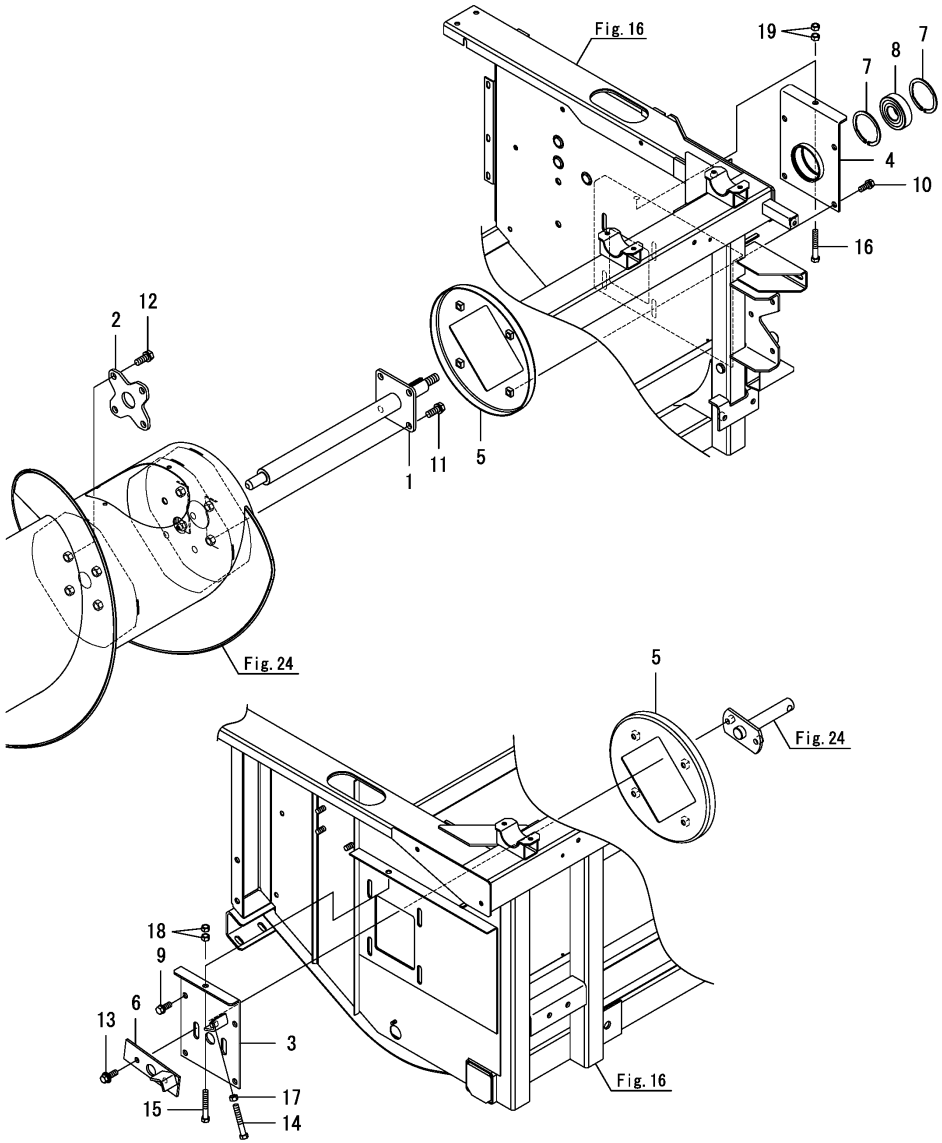

No.	Lev.	Parts No.	Description	Q'ty (A)	(B)	(C)	(D)	(E)	(F)	I	R
1	1	1E6C85-22700	SHAFT ASSY,PFA	1							
2	1	1E6C80-22720	STAY,PFA SHAFT	1							
3	1	1E6C80-22730	HANGER,AUGER L	1							
4	1	1E6C80-22760	HANGER,AUGER R	1							
5	1	1E6C80-22800	PLATE,WINDING PREV.	2							
5-1	1	1E6B30-22800-2	PLATE, PFA PROTECT	2						R	
	(A=F800157)										
6	1	1E6B30-22850	BASE, ADJUST B	1							
7	1	22252-000721	RING, 72	2							
8	1	24104-063064	BEARING, BALL 6306UU	1							
9	1	26013-100252	BOLT, M10X 25	4							
10	1	26013-100252	BOLT, M10X 25	4							
11	1	26013-120302	BOLT, M12X 30	4							
12	1	26013-120302	BOLT, M12X 30	4							
13	1	26014-100302	BOLT, M10X 30	2							
14	1	26116-100654	BOLT, M10X 65 PLATED	1							
15	1	26116-100654	BOLT, M10X 65 PLATED	1							
15-1	1	26116-100504	BOLT, M10X 50 PLATED	1						R	
	(A=*2018.08)										
16	1	26116-100654	BOLT, M10X 65 PLATED	1							
16-1	1	26116-100504	BOLT, M10X 50 PLATED	1						R	
	(A=*2018.08)										
17	1	26717-100002	NUT, M10	1							
18	1	26717-100002	NUT, M10	2							
19	1	26717-100002	NUT, M10	2							

N:Old $\xleftrightarrow[\text{No}]{\text{Yes}}$ New, Q:Old $\xleftrightarrow[\text{Yes}]{\text{No}}$ New, R:Old $\xleftrightarrow[\text{Yes}]{\text{Yes}}$ New, S:Old $\xleftrightarrow[\text{No}]{\text{No}}$ New, W:Add, Z:Discontinued, F:Interchangeable by set, K:Q'ty Change

Copyright (C) 2018 YANMAR CO., LTD. All RightsReserved.

Fig.26. CROP GUIDE

(A)=AW70GV,RSX(F)-IN
(B)=
(C)=
(D)=
(E)=
(F)=

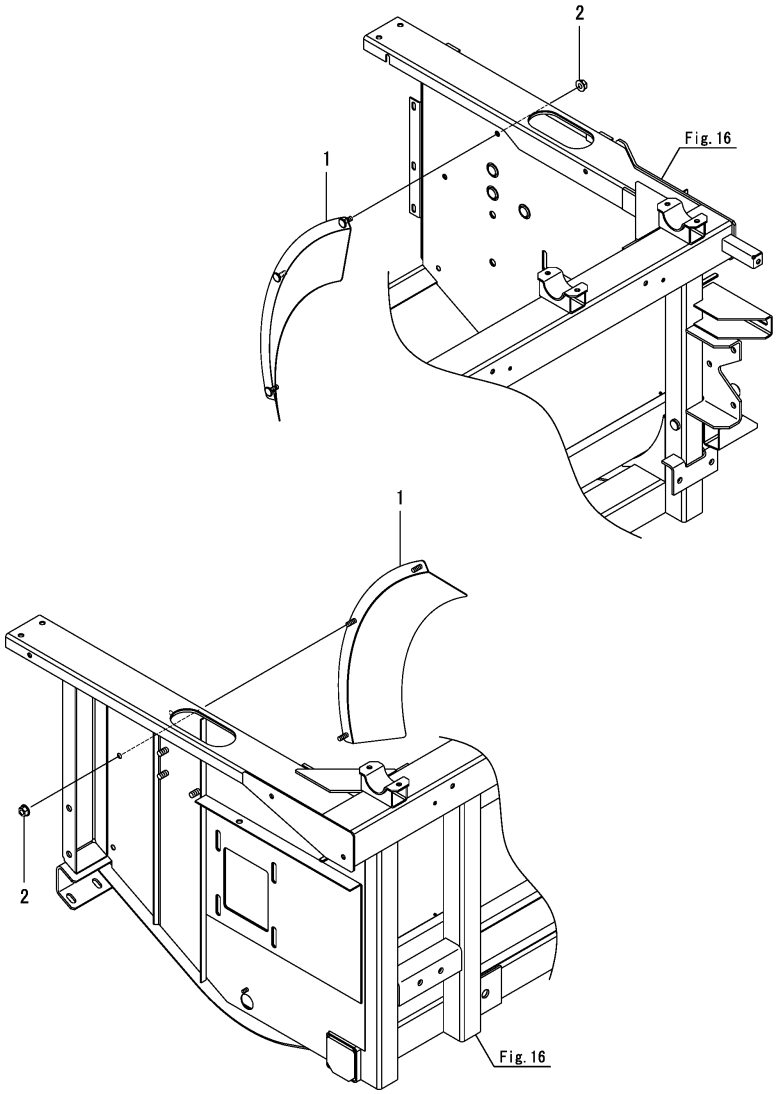

No.	Lev.	Parts No.	Description	Q'ty (A)	(B)	(C)	(D)	(E)	(F)	I	R
1	1	1E6B30-22900	GUIDE, CROP	2							
1-1	1	1E6B30-22900-2	GUIDE, CROP	2						S	1
	(A=*2018.12)										
2	1	26367-060002	NUT, M6	6							

Remarks
(1)Painting color=No.1 : YANMAR NAVY GRAY, No.1-1 : CATION E-COATING BLACK.

N:Old $\xleftarrow[\text{No}]{\text{Yes}}$ New, Q:Old $\xleftarrow[\text{Yes}]{\text{No}}$ New, R:Old $\xleftarrow[\text{Yes}]{\text{Yes}}$ New, S:Old $\xleftarrow[\text{No}]{\text{No}}$ New, W:Add, Z:Discontinued, F:Interchangeable by set, K:Q'ty Change

Copyright (C) 2018 YANMAR CO., LTD. All RightsReserved.

Fig.27. FEEDER HOUSE DRIVE(1ST)

(A)=AW70GV,RSX(F)-IN (D)=
(B)= (E)=
(C)= (F)=

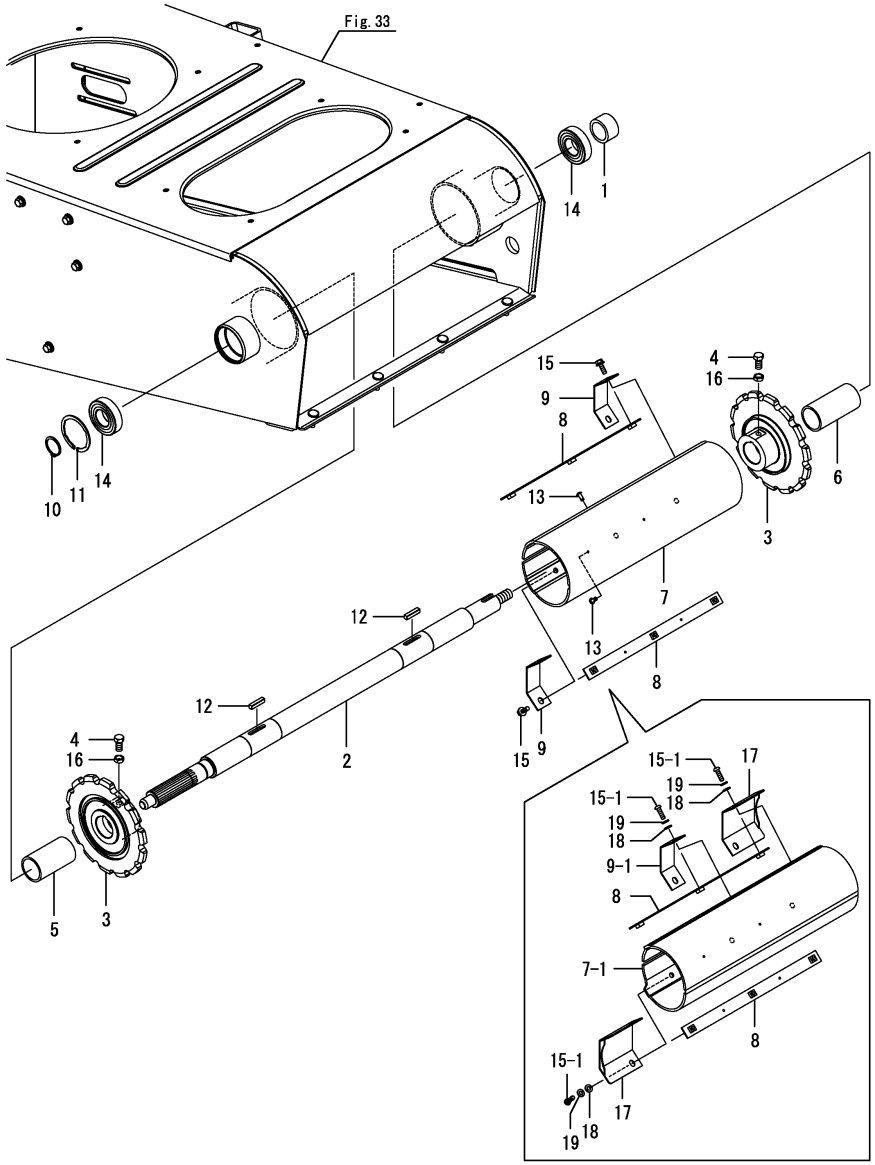

No.	Lev.	Parts No.	Description	Q'ty (A)	(B)	(C)	(D)	(E)	(F)	I	R
1	1	1E6B30-26040-1	COLLAR, 32X42X24.3	1						Z	1
	(A=F800157)										
2	1	1E6B30-26102	SHAFT, FH CONVEYOR	1							
3	1	1E6C40-26150	SPROCKET, 28T	2							
4	1	1E6B30-26160	SETBOLT, M10	2							
5	1	1E6B30-26170	COLLAR, FH SHAFT L	1							
6	1	1E6B30-26180	COLLAR, FH SHAFT R	1							
7	1	1E6C40-27010	COVER,FH SHAFT A	1							
7-1	1	1E6C40-27011	COVER,FH SHAFT A	1						F	2
	(A=F800157)										
8	1	1E6B30-27020	PLATE, FH SHAFT B	2							
9	1	1E6C40-27040	PLATE,FH SHAFT C	3							
9-1	1	1E6C40-27040	PLATE,FH SHAFT C	1						K	2
	(A=F800157)										
10	1	22242-000300	RING, 30	1							
11	1	22252-000621	RING, 62	1							
12	1	22551-070300	KEY, 7X 30	2							
13	1	22693-320641	RIVET, 3.2X 6.4	4							
14	1	24104-062064	BEARING, BALL 6206UU	2							
15	1	26014-060202	BOLT, M6X 20	6							
15-1	1	1E6C80-27090	BOLT,HEX.SOCKET 6X20	6						F	2
	(A=F800157)										
16	1	26757-100002	NUT, LOCK M10	2							
17	1	1E6C80-27050	PLATE,FH SHAFT D	2						W	2
	(A=F800157)										
18	1	22137-060000	WASHER, 6	6						W	2
	(A=F800157)										
19	1	22217-060000	WASHER, SPRING 6	6						W	2
	(A=F800157)										

Remarks
(1)No.1, Fig.28 No.1-1 interchangeable by set.
(2)No.7-1, 9-1, 15-1, 17, 18 & 19 interchangeable by set.
* This item is applicable to [(A)=*2018.06] or previous machines(Refer to Fig.162).

N:Old ⇄(Yes/No) New, Q:Old ⇄(No/Yes) New, R:Old ⇄(Yes/Yes) New, S:Old ⇄(No/No) New, W:Add, Z:Discontinued, F:Interchangeable by set, K:Q'ty Change

Copyright (C) 2018 YANMAR CO., LTD. All RightsReserved.

Fig.28. FEEDER HOUSE DRIVE(2ND)

(A)=AW70GV,RSX(F)-IN (D)=
(B)= (E)=
(C)= (F)=

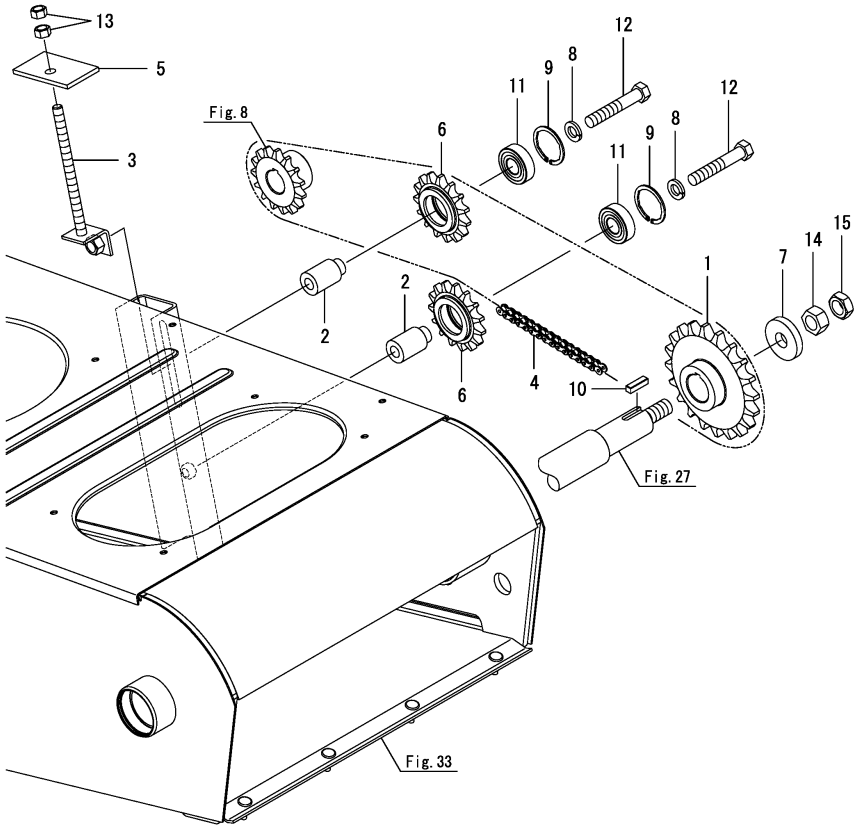

No.	Lev.	Parts No.	Description	Q'ty (A)	(B)	(C)	(D)	(E)	(F)	I	R
1	1	1E6C85-26200	SPROCKET, 22T	1							
1-1	1	1E6C85-26300	SPROCKET, 22T	1						N	1
	(A=F800157)										
2	1	1E6B30-26230	BUSH, TENSION 17	2							
3	1	1E6B30-26240	BOLT, ADJUST	1							
4	1	1E6C40-26260	CHAIN, 50X139	1							
5	1	1E6B30-26280	PLATE, ADJUSTING	1							
6	1	1E6B30-36530	SPROCKET, 13 TENSION	2							
7	1	1E6B30-36560	COLLAR, 16.5X45X8	1							
8	1	22217-120000	WASHER, SPRING 12	2							
9	1	22252-000401	RING, 40	2							
10	1	22551-070250	KEY, 7X 25	1							
11	1	24104-062034	BEARING, BALL 6203UU	2							
12	1	26116-120702	BOLT, M12X 70 PLATED	2							
13	1	26717-100002	NUT, M10	2							
14	1	26737-160002	NUT, M16	1							
15	1	26777-160002	NUT, LOCK M16	1							

Remarks
(1)No.1-1, Fig.27 No.1 interchangeable by set.

N:Old $\xleftrightarrow[\text{No}]{\text{Yes}}$ New, Q:Old $\xleftrightarrow[\text{Yes}]{\text{No}}$ New, R:Old $\xleftrightarrow[\text{Yes}]{\text{Yes}}$ New, S:Old $\xleftrightarrow[\text{No}]{\text{No}}$ New, W:Add, Z:Discontinued, F:Interchangeable by set, K:Q'ty Change

Copyright (C) 2018 YANMAR CO., LTD. All RightsReserved.

Fig.29. CHAIN COVER(FEEDER HOUSE)

(A)=AW70GV,RSX(F)-IN (D)=
(B)= (E)=
(C)= (F)=

No.	Lev.	Parts No.	Description	Q'ty (A)	(B)	(C)	(D)	(E)	(F)	I	R
1	1	1E6C80-26500	COVER,FH CHAIN	1							
2	1	26014-080162	BOLT, M8X 16	5							

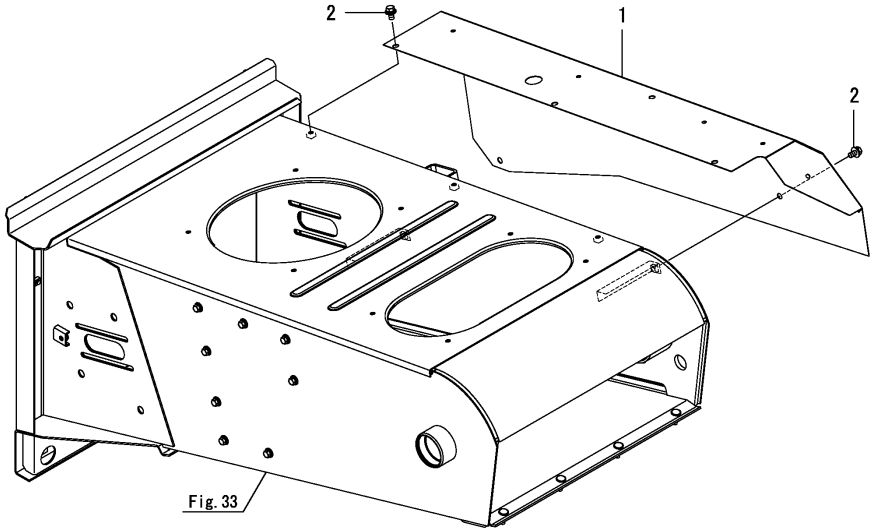

N:Old ◄Yes/No► New, Q:Old ◄No/Yes► New, R:Old ◄Yes/Yes► New, S:Old ◄No/No► New, W:Add, Z:Discontinued, F:Interchangeable by set, K:Q'ty Change

Copyright (C) 2018 YANMAR CO., LTD. All RightsReserved.

Fig.30. FEEDER HOUSE DRUM

(A)=AW70GV,RSX(F)-IN (D)=
(B)= (E)=
(C)= (F)=

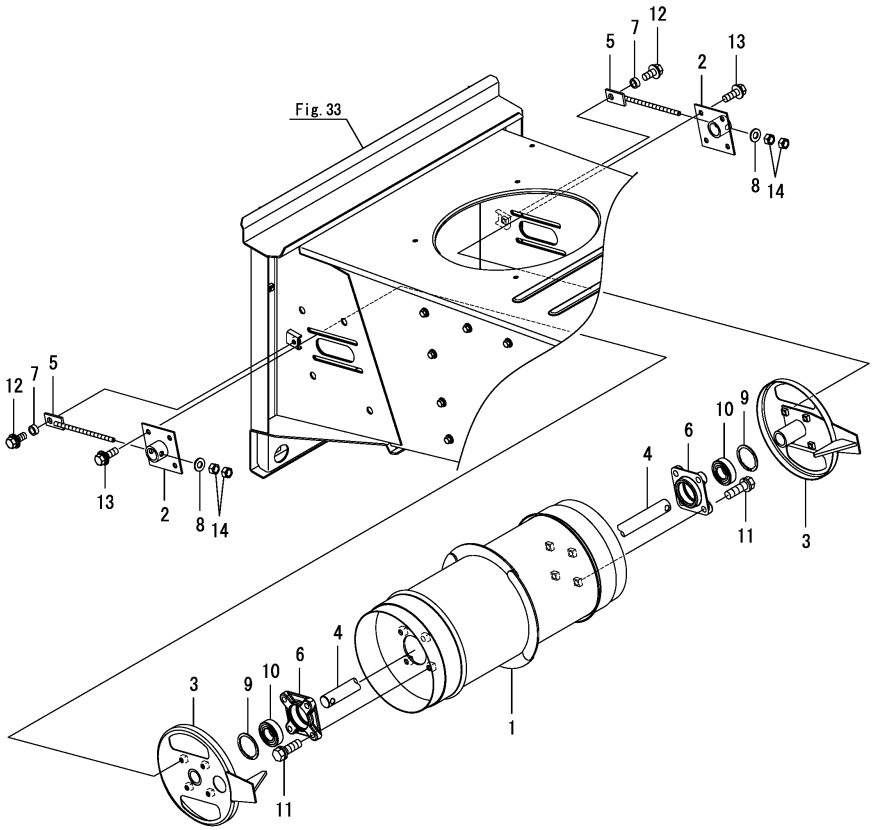

No.	Lev.	Parts No.	Description	Q'ty (A)	(B)	(C)	(D)	(E)	(F)	I	R
1	1	1E6C80-27100	DRUM,FH	1							
1-1	1 (A=F800214)	1E6C80-27150	DRUM,FH	1						R	
2	1	1E6C80-27130	BRACKET,FH DRUM	2							
3	1	1E6C80-27200	FLANGE,FH DRUM	2							
4	1	1E6C40-27300	SHAFT, FH DRUM	1							
5	1	1E6C80-27350	BOLT,DRUM TENSION	2							
6	1	1E6C80-27380	FLANGE	2							
7	1	1E8559-75030	SPACER, 5	2							
8	1	22137-080000	WASHER, 8	2							
9	1	22252-000521	RING, 52	2							
10	1	24104-062054	BEARING, BALL 6205UU	2							
11	1	26013-100302	BOLT, M10X 30	8							
12	1	26014-080202	BOLT, M8X 20	2							
13	1	26014-080252	BOLT, M8X 25	8							
14	1	26717-080002	NUT, M8	4							

Remarks
* This item is applicable to [(A)=*2018.06] or previous machines(Refer to Fig.163).

N:Old $\xleftarrow[\text{No}]{\text{Yes}}$ New, Q:Old $\xleftarrow[\text{Yes}]{\text{No}}$ New, R:Old $\xleftarrow[\text{Yes}]{\text{Yes}}$ New, S:Old $\xleftarrow[\text{No}]{\text{No}}$ New, W:Add, Z:Discontinued, F:Interchangeable by set, K:Q'ty Change

Copyright (C) 2018 YANMAR CO., LTD. All RightsReserved.

Fig.31. CONVEYOR CHAIN

(A)=AW70GV,RSX(F)-IN (D)=
(B)= (E)=
(C)= (F)=

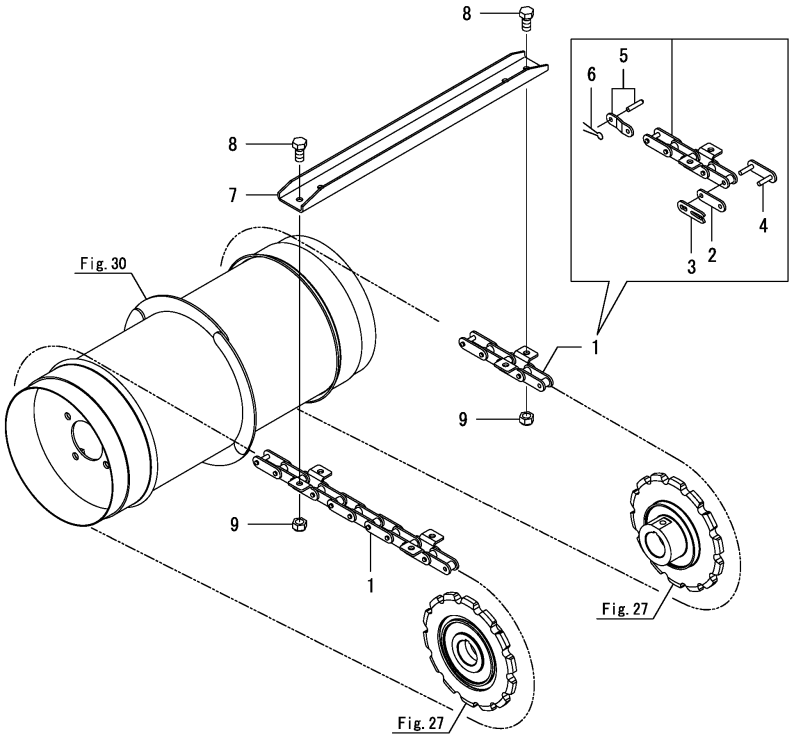

No.	Lev.	Parts No.	Description	Q'ty (A)	(B)	(C)	(D)	(E)	(F)	I	R
1	1	1E6C40-27600	CHAIN, FEEDER 65L	2							
2	2	1E6B30-27610	PLATE, JOINT LINK	2							
3	2	1E6B30-27620	CLIP, JOINT	2							
4	2	1E6B30-27630	JOINT	2							
5	2	1E6B30-27640	LINK, OFFSET	2							
6	2	22417-200100	COTTER PIN 2.0X10	2							
7	1	1E6C40-27650	SLAT, FEEDER	11							
8	1	26116-080162	BOLT, M8X 16 PLATED	44							
9	1	26346-080002	NUT, M8	44							

Remarks
* This item is applicable to [(A)=*2018.06] or previous machines(Refer to Fig.164).

N:Old ◄Yes/No► New, Q:Old ◄No/Yes► New, R:Old ◄Yes/Yes► New, S:Old ◄No/No► New, W:Add, Z:Discontinued, F:Interchangeable by set, K:Q'ty Change

Copyright (C) 2018 YANMAR CO., LTD. All RightsReserved.

Fig.32. SHEET METAL(FEEDER HOUSE)

(A)=AW70GV,RSX(F)-IN (D)=
(B)= (E)=
(C)= (F)=

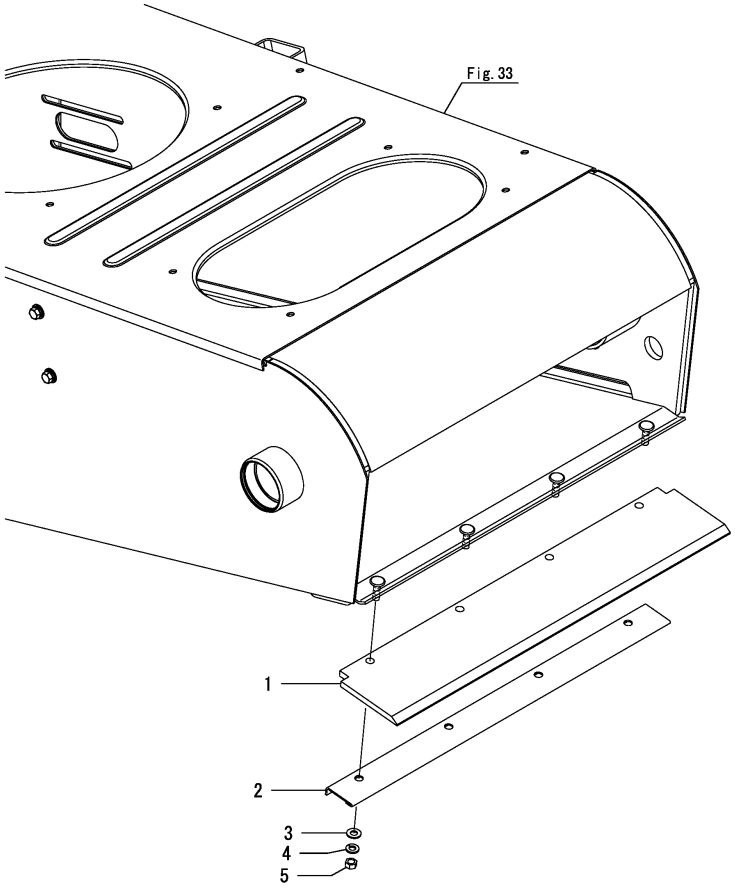

No.	Lev.	Parts No.	Description	Q'ty (A)	(B)	(C)	(D)	(E)	(F)	I	R
1	1	1E6C80-27700	RUBBER,SHEET METAL	1							
2	1	1E6B30-27712	PLATE, SHEET METAL	1							
3	1	22137-080000	WASHER, 8	4							
4	1	22217-080000	WASHER, SPRING 8	4							
5	1	26717-080002	NUT, M8	4							

Remarks
* This item is applicable to [(A)=*2018.06] or previous machines(Refer to Fig.165).

N:Old ◄Yes/No► New, Q:Old ◄No/Yes► New, R:Old ◄Yes/Yes► New, S:Old ◄No/No► New, W:Add, Z:Discontinued, F:Interchangeable by set, K:Q'ty Change

Copyright (C) 2018 YANMAR CO., LTD. All RightsReserved.

Fig.33. FEEDER HOUSE

(A)=AW70GV,RSX(F)-IN (D)=
(B)= (E)=
(C)= (F)=

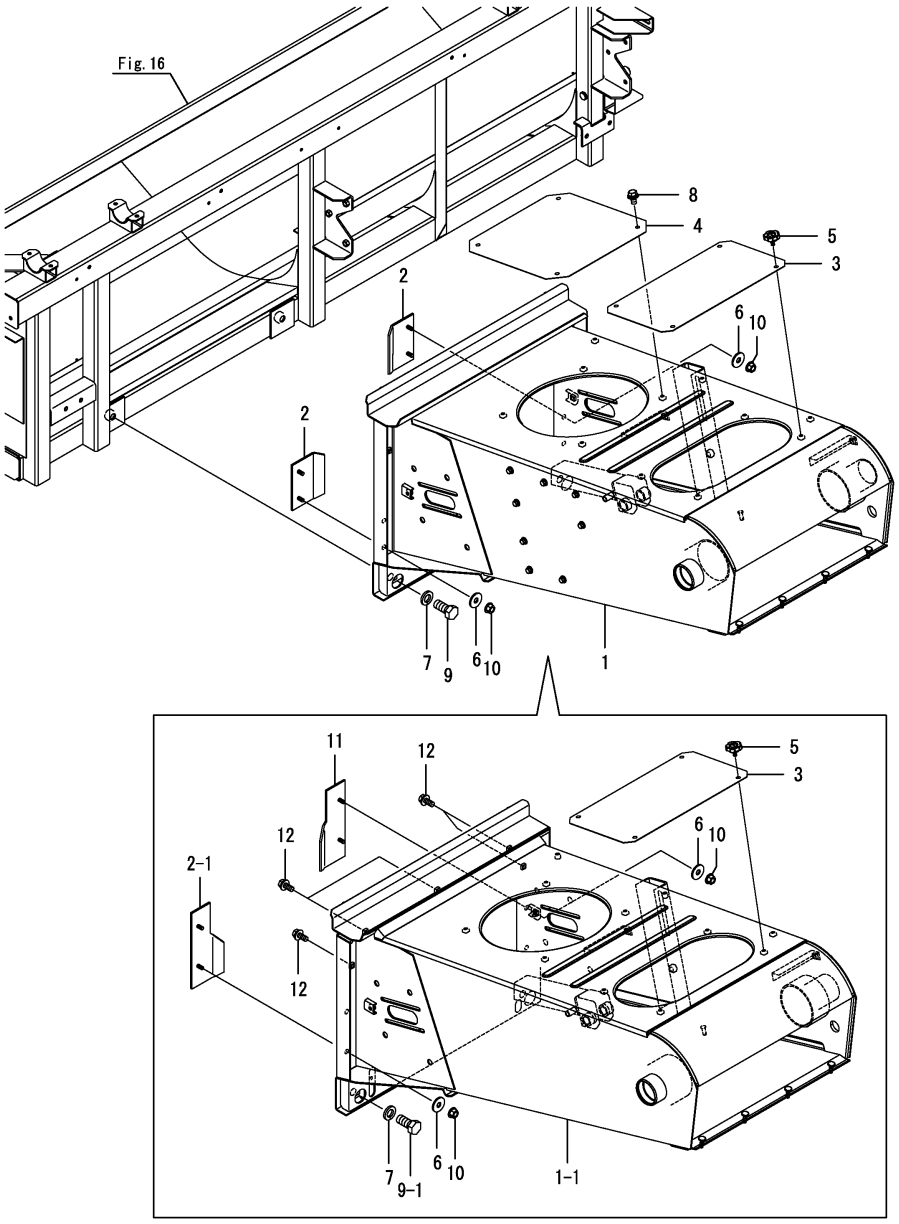

No.	Lev.	Parts No.	Description	Q'ty (A)	(B)	(C)	(D)	(E)	(F)	I	R
1	1	1E6C80-28001	HOUSE,FEEDER	1							
1-1	1	1E6D10-28000	HOUSE,FEEDER W	1						F	1
	(A=F800214)										
2	1	1E6B30-28570-2	SCRAPER, FH	2							
2-1	1	1E6D10-28860	SCRAPER, FH L	1						F	1
	(A=F800214)										
3	1	1E6B30-28690	COVER ASSY,FH UPPER	1							
4	1	1E6C80-28700	COVER,FH UPPER B	1						Z	
	(A=F800033)										
5	1	1E8559-48150	BOLT, KNOB 8X15	4							
6	1	22157-080000	WASHER, 8	4							
7	1	22217-160000	WASHER, SPRING 16	2							
8	1	26014-080162	BOLT, M8X 16	4						Z	
	(A=F800033)										
9	1	26156-160352	BOLT, M16X 35 PLATED	2							
9-1	1	1E6D10-28780	BOLT,16X35	2						F	1
	(A=F800214)										
10	1	26367-080002	NUT, M8	4							
11	1	1E6D10-28880	SCRAPER, FH R	1						W	1
	(A=F800214)										
12	1	26014-080202	BOLT, M8X 20	5						W	1
	(A=F800214)										

Remarks
(1)No.1-1, 2-1, 9-1, 11 & 12 interchangeable by set.
* This item is applicable to [(A)=*2018.06] or previous machines(Refer to Fig.166 from Fig.161).

N:Old $\frac{\text{Yes}}{\text{No}}$ New, Q:Old $\frac{\text{No}}{\text{Yes}}$ New, R:Old $\frac{\text{Yes}}{\text{Yes}}$ New, S:Old $\frac{\text{No}}{\text{No}}$ New, W:Add, Z:Discontinued, F:Interchangeable by set, K:Q'ty Change

Copyright (C) 2018 YANMAR CO., LTD. All RightsReserved.

Fig.161. (33A)FEEDER HOUSE(1)

(A)=AW70GV,RSX(F)-IN (D)=
(B)= (E)=
(C)= (F)=

No.	Lev.	Parts No.	Description	Q'ty (A)	(B)	(C)	(D)	(E)	(F)	I	R
1	1	1E6D10-28080	FEEDER ASSY,HOUSE W	1							1
1-1	1	1E6D10-28081	FEEDER ASSY,HOUSE W	1						R	1
	(A=F800320)										
1-2	1	1E6D10-28082	FEEDER ASSY,HOUSE W	1						N	1
	(A=*2018.10)										
2	1	1E6D10-28780	BOLT,16X35	2							
3	1	22217-160000	WASHER, SPRING 16	2							

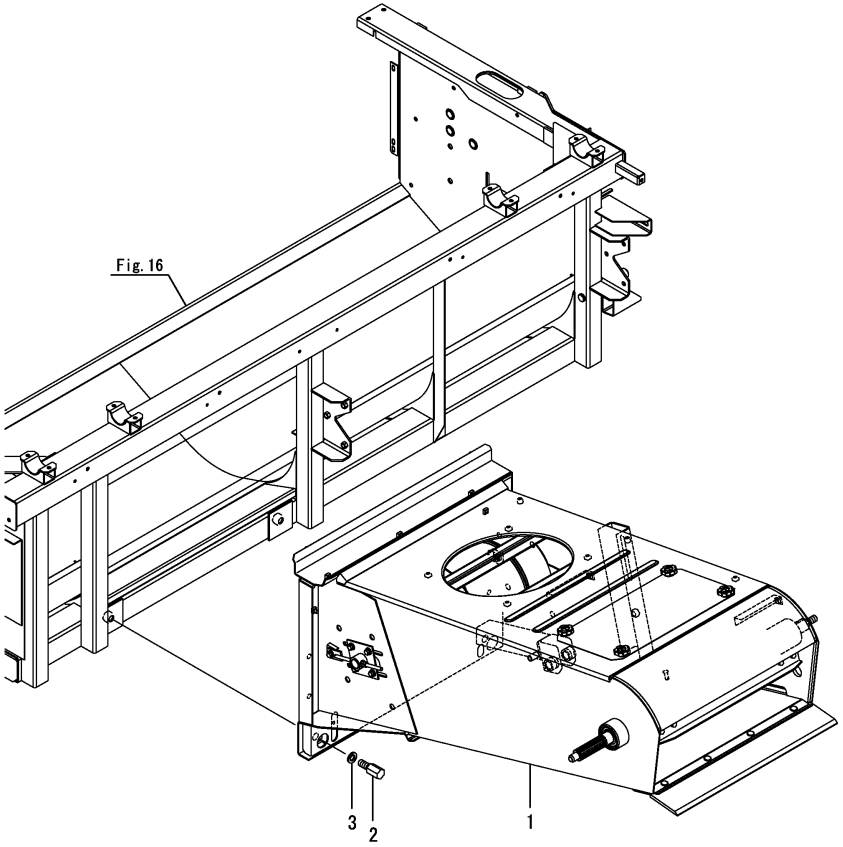

Remarks
* This item is applicable to [(A)=*2018.07] or following machines(Refer to Fig.33).
(1)No.1 includes Fig.166 from Fig.161.

N:Old $\xleftrightarrow[\text{No}]{\text{Yes}}$ New, Q:Old $\xleftrightarrow[\text{Yes}]{\text{No}}$ New, R:Old $\xleftrightarrow[\text{Yes}]{\text{Yes}}$ New, S:Old $\xleftrightarrow[\text{No}]{\text{No}}$ New, W:Add, Z:Discontinued, F:Interchangeable by set, K:Q'ty Change

Copyright (C) 2018 YANMAR CO., LTD. All RightsReserved.

Fig.162. (33B)FEEDER HOUSE(2)

(A)=AW70GV,RSX(F)-IN (D)=
(B)= (E)=
(C)= (F)=

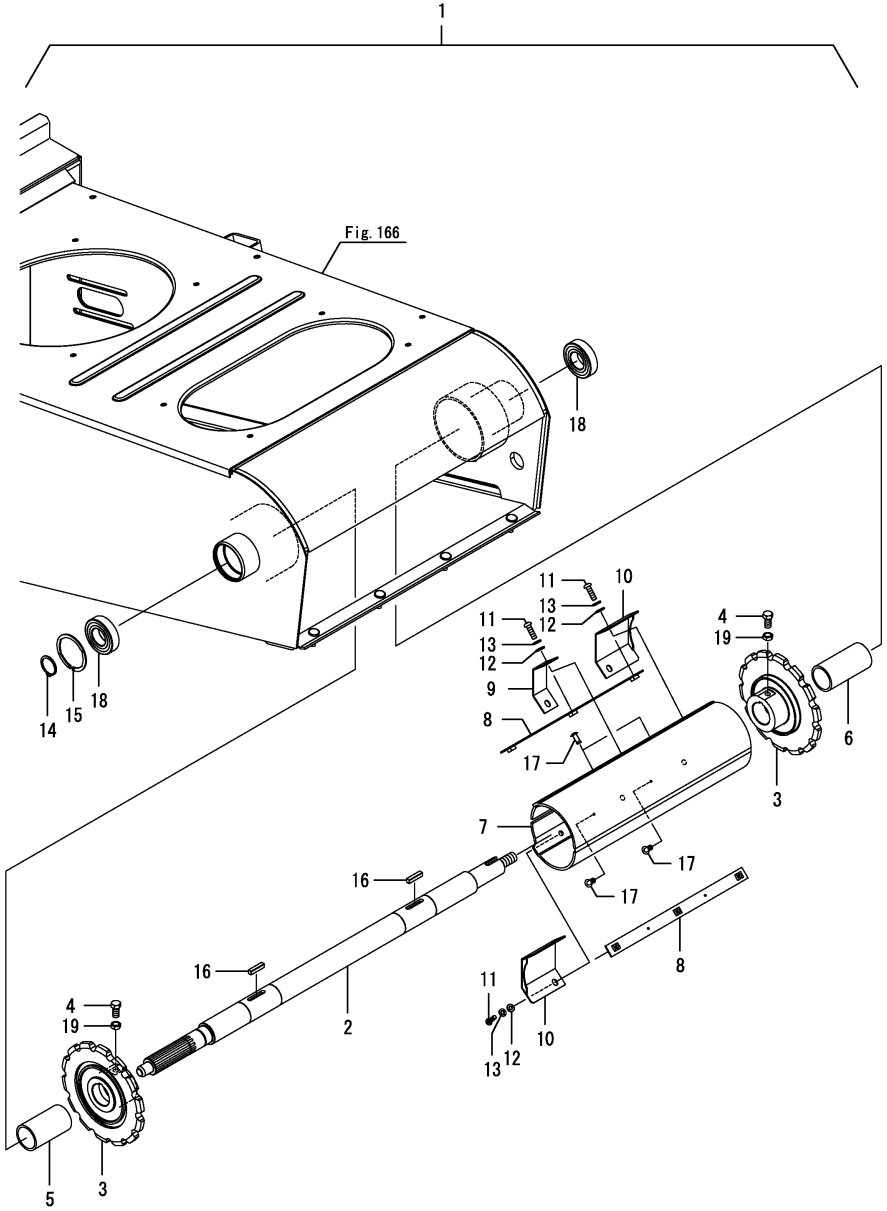

No.	Lev.	Parts No.	Description	Q'ty (A)	(B)	(C)	(D)	(E)	(F)	I	R
1	2	7E6D10-26000	DRIVE ASSY, FH1	1							
2	3	1E6B30-26102	SHAFT, FH CONVEYOR	1							
3	3	1E6C40-26150	SPROCKET, 28T	2							
4	3	1E6B30-26160	SETBOLT, M10	2							
5	3	1E6B30-26170	COLLAR, FH SHAFT L	1							
6	3	1E6B30-26180	COLLAR, FH SHAFT R	1							
7	3	1E6C40-27011	COVER,FH SHAFT A	1							
8	3	1E6B30-27020	PLATE, FH SHAFT B	2							
9	3	1E6C40-27040	PLATE,FH SHAFT C	1							
10	3	1E6C80-27050	PLATE,FH SHAFT D	2							
11	3	1E6C80-27090	BOLT,HEX.SOCKET 6X20	6							
12	3	22137-060000	WASHER, 6	6							
13	3	22217-060000	WASHER, SPRING 6	6							
14	3	22242-000300	RING, 30	1							
15	3	22252-000621	RING, 62	1							
16	3	22551-070300	KEY, 7X 30	2							
17	3	22693-320641	RIVET, 3.2X 6.4	4							
18	3	24104-062064	BEARING, BALL 6206UU	2							
19	3	26757-100002	NUT, LOCK M10	2							

Remarks
* This item is applicable to [(A)=*2018.07] or following machines(Refer to Fig.27).
* This figure is incorporated in Fig.161 No.1.

N:Old $\xleftarrow[\text{No}]{\text{Yes}}$ New, Q:Old $\xleftarrow[\text{Yes}]{\text{No}}$ New, R:Old $\xleftarrow[\text{Yes}]{\text{Yes}}$ New, S:Old $\xleftarrow[\text{No}]{\text{No}}$ New, W:Add, Z:Discontinued, F:Interchangeable by set, K:Q'ty Change

Copyright (C) 2018 YANMAR CO., LTD. All RightsReserved.

Fig.163. (33C)FEEDER HOUSE(3)

(A)=AW70GV,RSX(F)-IN
(B)=
(C)=
(D)=
(E)=
(F)=

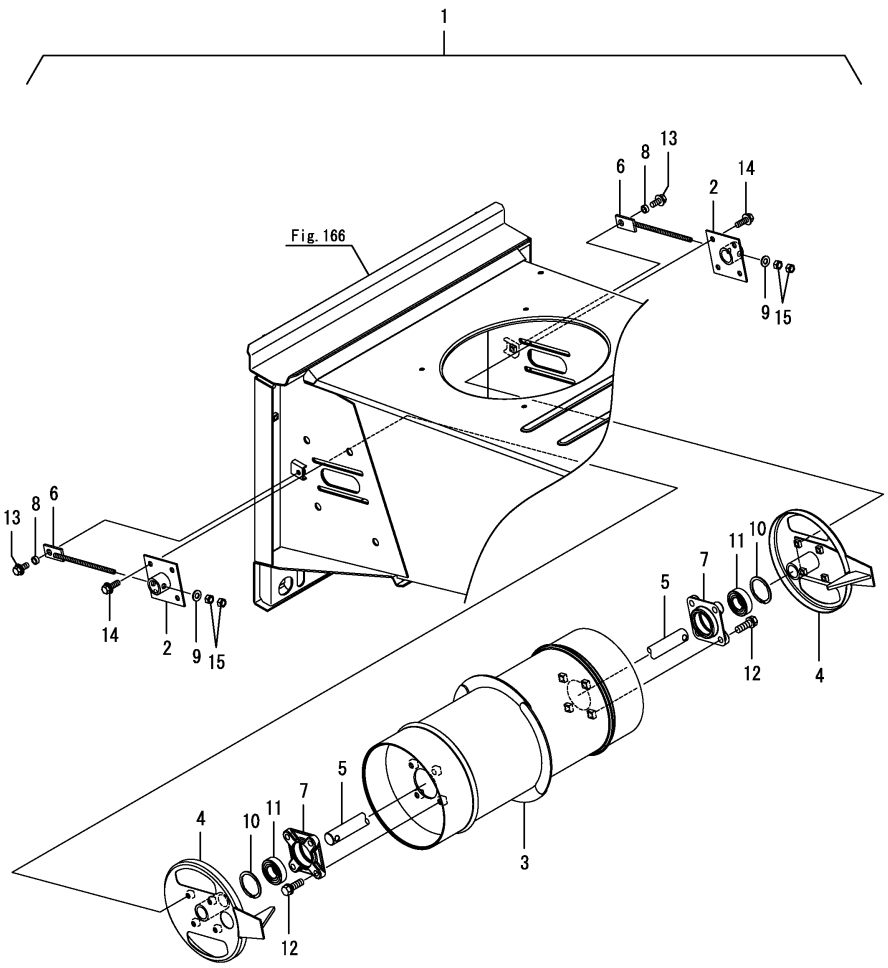

No.	Lev.	Parts No.	Description	Q'ty (A)	(B)	(C)	(D)	(E)	(F)	I	R
1	2	7E6D10-27200	DRUM ASSY, FH	1							
2	3	1E6C80-27130	BRACKET,FH DRUM	2							
3	3	1E6C80-27150	DRUM,FH	1							
3-1	3	1E6C80-27151	DRUM,FH	1						N	
	(A=*2018.10)										
4	3	1E6C80-27200	FLANGE,FH DRUM	2							
5	3	1E6C40-27300	SHAFT, FH DRUM	1							
6	3	1E6C80-27350	BOLT,DRUM TENSION	2							
7	3	1E6C80-27380	FLANGE	2							
8	3	1E8559-75030	SPACER, 5	2							
9	3	22137-080000	WASHER, 8	2							
10	3	22252-000521	RING, 52	2							
11	3	24104-062054	BEARING, BALL 6205UU	2							
12	3	26013-100302	BOLT, M10X 30	8							
13	3	26014-080202	BOLT, M8X 20	2							
14	3	26014-080252	BOLT, M8X 25	8							
15	3	26717-080002	NUT, M8	4							

Remarks
* This item is applicable to [(A)=*2018.07] or following machines(Refer to Fig.30).
* This figure is incorporated in Fig.161 No.1.

N:Old $\xleftrightarrow[\text{No}]{\text{Yes}}$ New, Q:Old $\xleftrightarrow[\text{Yes}]{\text{No}}$ New, R:Old $\xleftrightarrow[\text{Yes}]{\text{Yes}}$ New, S:Old $\xleftrightarrow[\text{No}]{\text{No}}$ New, W:Add, Z:Discontinued, F:Interchangeable by set, K:Q'ty Change

Copyright (C) 2018 YANMAR CO., LTD. All RightsReserved.

Fig.164. (33D)FEEDER HOUSE(4)

(A)=AW70GV,RSX(F)-IN (D)=
(B)= (E)=
(C)= (F)=

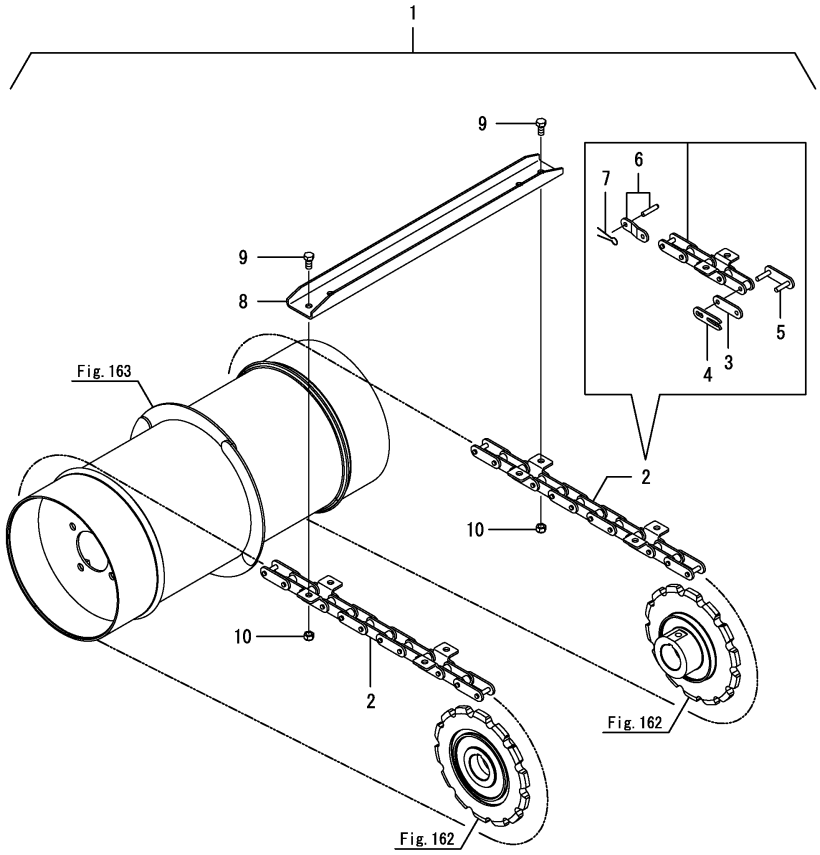

No.	Lev.	Parts No.	Description	Q'ty (A)	(B)	(C)	(D)	(E)	(F)	I	R
1	2	7E6D10-27600	CHAIN ASSY, CONVEYER	1							
2	3	1E6C40-27600	CHAIN, FEEDER 65L	2							
3	4	1E6B30-27610	PLATE, JOINT LINK	2							
4	4	1E6B30-27620	CLIP, JOINT	2							
5	4	1E6B30-27630	JOINT	2							
6	4	1E6B30-27640	LINK, OFFSET	2							
7	4	22417-200100	COTTER PIN 2.0X10	2							
8	3	1E6C40-27650	SLAT, FEEDER	11							
9	3	26116-080162	BOLT, M8X 16 PLATED	44							
10	3	26346-080002	NUT, M8	44							

Remarks
* This item is applicable to [(A)=*2018.07] or following machines(Refer to Fig.31).
* This figure is incorporated in Fig.161 No.1.

N:Old $\frac{\text{Yes}}{\text{No}}$ New, Q:Old $\frac{\text{No}}{\text{Yes}}$ New, R:Old $\frac{\text{Yes}}{\text{Yes}}$ New, S:Old $\frac{\text{No}}{\text{No}}$ New, W:Add, Z:Discontinued, F:Interchangeable by set, K:Q'ty Change

Copyright (C) 2018 YANMAR CO., LTD. All RightsReserved.

Fig.165. (33E)FEEDER HOUSE(5)

(A)=AW70GV,RSX(F)-IN (D)=
(B)= (E)=
(C)= (F)=

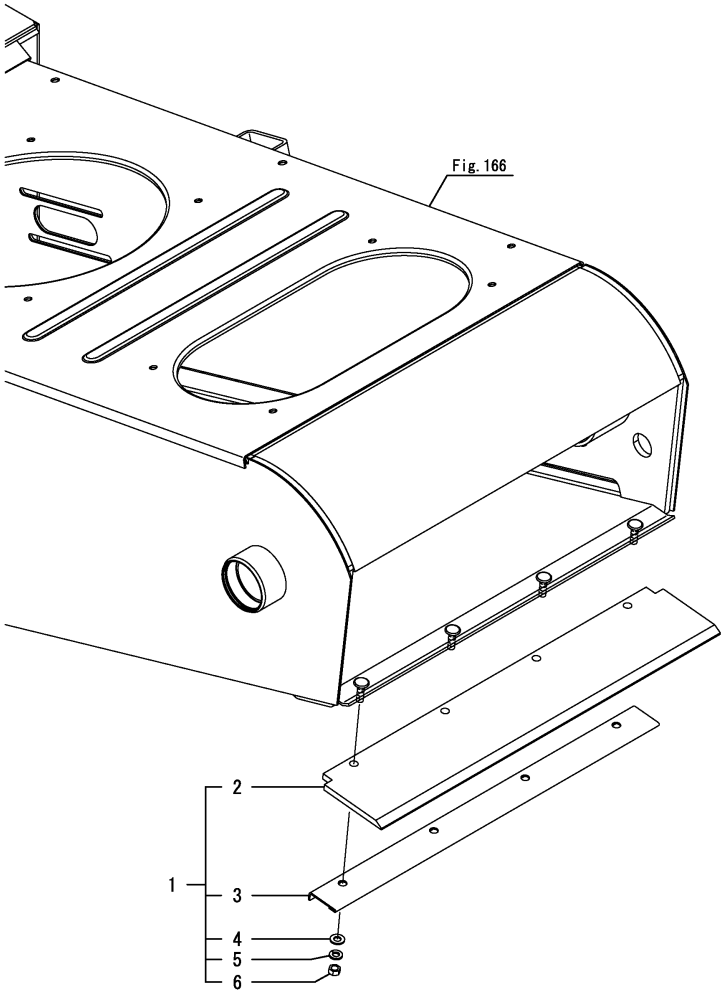

No.	Lev.	Parts No.	Description	Q'ty (A)	(B)	(C)	(D)	(E)	(F)	I	R
1	2	7E6D10-27700	METAL ASSY, FH SHEET	1							
2	3	1E6C80-27700	RUBBER,SHEET METAL	1							
3	3	1E6B30-27712	PLATE, SHEET METAL	1							
3-1	3 (A=F800320)	1E6B30-27713	PLATE, SHEET METAL	1						R	
4	3	22137-080000	WASHER, 8	4							
5	3	22217-080000	WASHER, SPRING 8	4							
6	3	26717-080002	NUT, M8	4							

Remarks
* This item is applicable to [(A)=*2018.07] or following machines(Refer to Fig.32).
* This figure is incorporated in Fig.161 No.1.

N:Old $\xleftrightarrow[\text{No}]{\text{Yes}}$ New, Q:Old $\xleftrightarrow[\text{Yes}]{\text{No}}$ New, R:Old $\xleftrightarrow[\text{Yes}]{\text{Yes}}$ New, S:Old $\xleftrightarrow[\text{No}]{\text{No}}$ New, W:Add, Z:Discontinued, F:Interchangeable by set, K:Q'ty Change

Copyright (C) 2018 YANMAR CO., LTD. All RightsReserved.

Fig.166. (33F)FEEDER HOUSE(6)

(A)=AW70GV,RSX(F)-IN (D)=
(B)= (E)=
(C)= (F)=

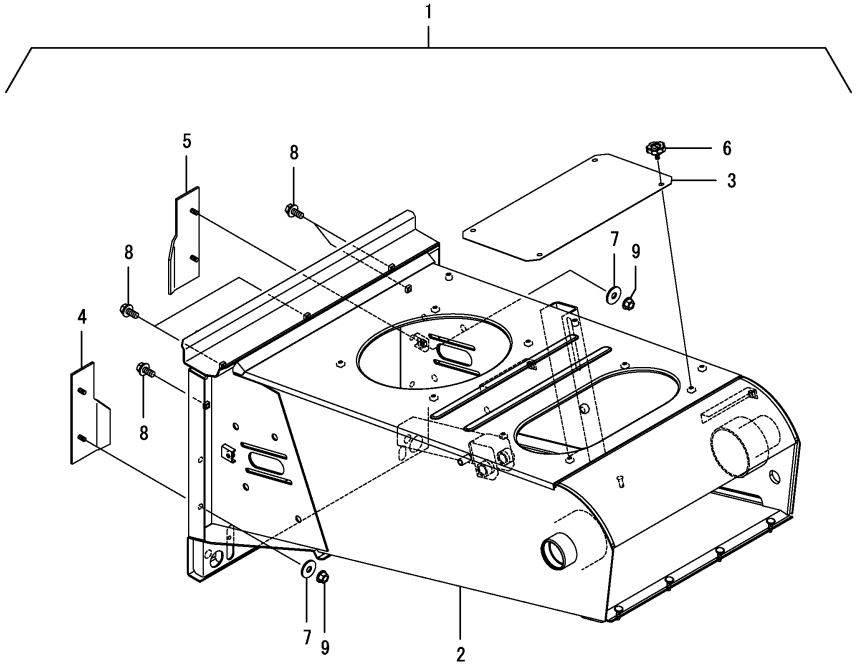

No.	Lev.	Parts No.	Description	Q'ty (A)	(B)	(C)	(D)	(E)	(F)	I	R
1	2	7E6D10-28010	FEEDER ASSY, HOUSE 1	1							
2	3	1E6D10-28000	HOUSE,FEEDER W	1							
3	3	1E6B30-28690	COVER ASSY,FH UPPER	1							
4	3	1E6D10-28860	SCRAPER, FH L	1							
5	3	1E6D10-28880	SCRAPER, FH R	1							
6	3	1E8559-48150	BOLT, KNOB 8X15	4							
7	3	22157-080000	WASHER, 8	4							
8	3	26014-080202	BOLT, M8X 20	5							
9	3	26367-080002	NUT, M8	4							

Remarks
* This item is applicable to [(A)=*2018.07] or following machines(Refer to Fig.33).
* This figure is incorporated in Fig.161 No.1.

N:Old $\overset{\text{Yes}}{\underset{\text{No}}{\leftrightarrow}}$ New, Q:Old $\overset{\text{No}}{\underset{\text{Yes}}{\leftrightarrow}}$ New, R:Old $\overset{\text{Yes}}{\underset{\text{Yes}}{\leftrightarrow}}$ New, S:Old $\overset{\text{No}}{\underset{\text{No}}{\leftrightarrow}}$ New, W:Add, Z:Discontinued, F:Interchangeable by set, K:Q'ty Change

Copyright (C) 2018 YANMAR CO., LTD. All RightsReserved.

Fig.34. FITTING(FEEDER HOUSE)(1)

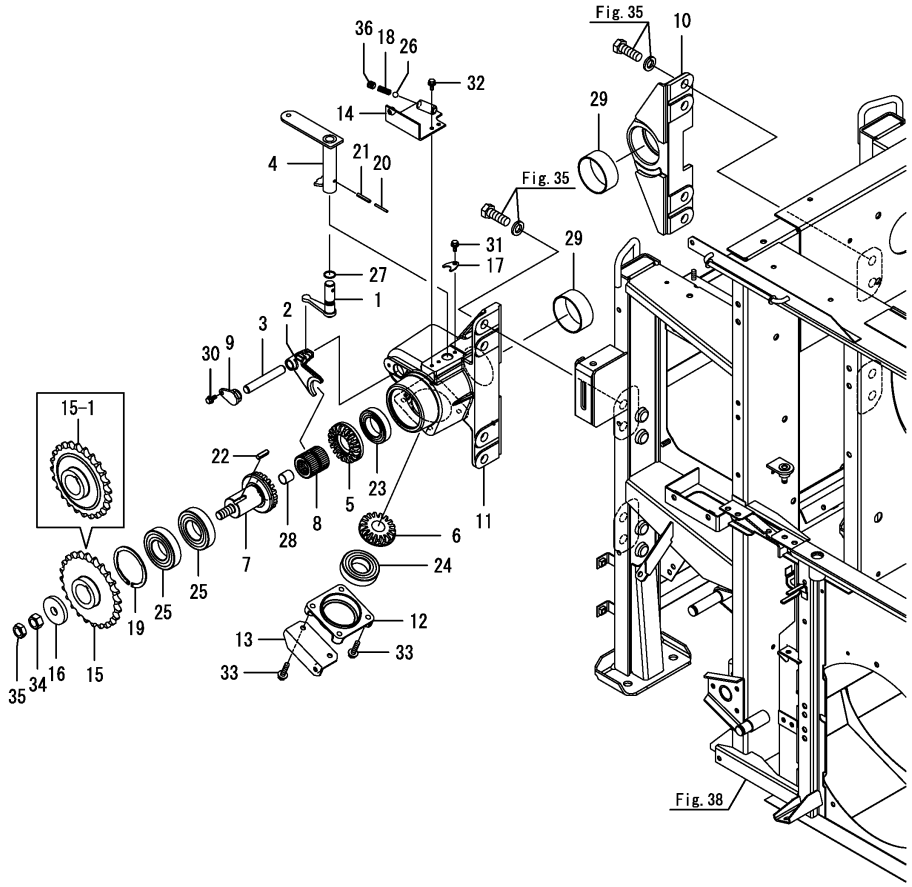

(A)=AW70GV,RSX(F)-IN (D)=
(B)= (E)=
(C)= (F)=

No.	Lev.	Parts No.	Description	Q'ty (A)	(B)	(C)	(D)	(E)	(F)	I	R
1	1	1E6B30-26652	SHIFTER ASSY, CHANGE	1							
2	1	1E6B30-26680	FORK, SHIFT	1							
2-1	1	1E6C43-26680	FORK, SHIFT	1						N	
	(A=F800157)										
3	1	1E6B30-26690	SHAFT, 15X98	1							
4	1	1E6B30-26841	ARM ASSY, SWITCH B	1							
5	1	1E6B30-26902	GEAR, BEVEL 19	1							
6	1	1E6B30-26912	GEAR, BEVEL 17	1							
7	1	1E6B30-26924	SHAFT, INPUT	1							
8	1	1E6B30-26951	CLUTCH, SLIDE	1							
9	1	1E6B30-26960	BUSH, CLUTCH FORK	1							
10	1	1E6B30-28901	HOLDER, FEEDER HOUSE	1							
11	1	1E6B30-28911	HOLDER, FEEDER HOUSE	1							
12	1	1E6B30-28960	HOLDER, BEARING	1							
13	1	1E6B30-28970	BRACKET, CHAIN COVER	1							
14	1	1E6B30-36400	STAY, COVER	1							
15	1	1E6C40-36580	SPROCKET, 24T	1							
15-1	1	1E6C80-36510	SPROCKET, 24T	1						F	1
	(A=F800157)										
16	1	1E6B30-36630	COLLAR, 16.5X55X8	1							
17	1	1E6B00-62350	STOPPER, SHAFT	1							
18	1	1E8559-63130	SPRING, 1.6X9.4X25	1							
19	1	22252-000801	CIRCLIP 80-H	1							
20	1	22351-030032	PIN, SPRING 3.0X32	1							
21	1	22351-050032	PIN, SPRING 5.0X32	1							
22	1	22551-070250	KEY, 7X 25	1							
23	1	24104-060084	BEARING, BALL 6008UU	1							
24	1	24104-062074	BEARING, BALL 6207UU	1							
25	1	24104-062084	BEARING, BALL 6208UU	2							
26	1	24190-120001	BALL, STEEL 3/8	1							
27	1	24311-000140	O-RING, 1AP14.0	1							
28	1	24550-018200	BUSH, 18X20	1							
29	1	24550-070300	BUSH, 70X30	2							
30	1	26014-060162	BOLT, M6X 16	1							
31	1	26014-060162	BOLT, M6X 16	1							
32	1	26014-060162	BOLT, M6X 16	2							
33	1	26014-080352	BOLT, M8X 35	4							
34	1	26737-160002	NUT, M16	1							
35	1	26777-160002	NUT, LOCK M16	1							
36	1	26911-120122	SCREW, M12X12	1							

Remarks
(1)No.15-1, Fig.58 No.1-1, 2-1 & Fig.59 No.5-1 interchangeable by set.

N:Old $\frac{\text{Yes}}{\text{No}}$ New, Q:Old $\frac{\text{No}}{\text{Yes}}$ New, R:Old $\frac{\text{Yes}}{\text{Yes}}$ New, S:Old $\frac{\text{No}}{\text{No}}$ New, W:Add, Z:Discontinued, F:Interchangeable by set, K:Q'ty Change

Copyright (C) 2018 YANMAR CO., LTD. All RightsReserved.

Fig.35. FITTING(FEEDER HOUSE)(2)

(A)=AW70GV,RSX(F)-IN (D)=
(B)= (E)=
(C)= (F)=

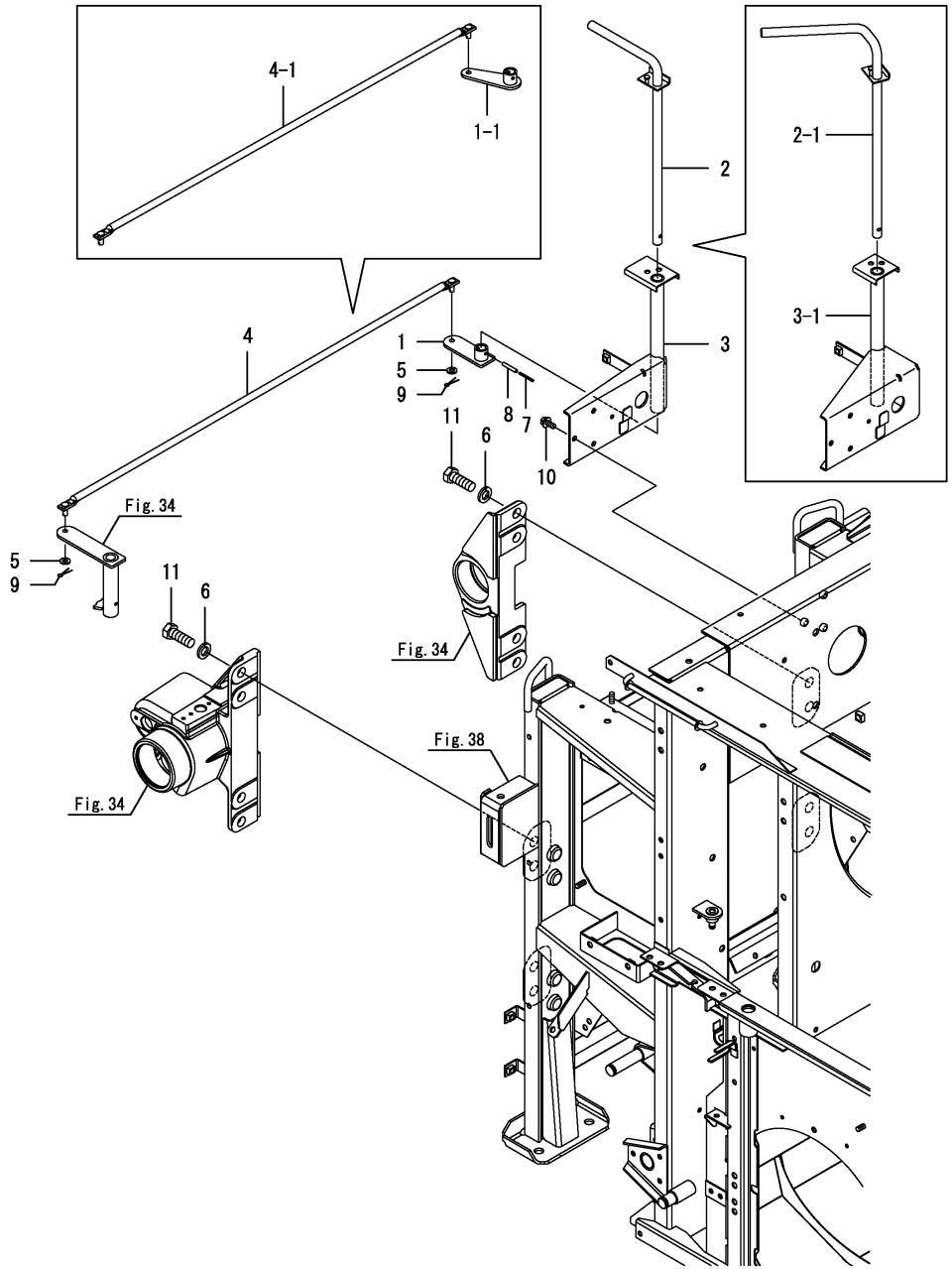

No.	Lev.	Parts No.	Description	Q'ty (A)	(B)	(C)	(D)	(E)	(F)	I	R
1	1	1E6B30-26610	ARM ASSY, SWITCH A	1							
1-1	1	1E6D10-26610-1	ARM ASSY, SWITCH A	1						S	
	(A=F800206)										
2	1	1E6B30-26703	LEVER ASSY, SWITCH	1							
2-1	1	1E6D10-26700	LEVER ASSY, SWITCH	1						S	
	(A=F800206)										
3	1	1E6C80-26740	FULCRUM,SWITCH	1							
3-1	1	1E6D10-26740	FULCRUM, SWITCH	1						S	
	(A=F800206)										
4	1	1E6B30-26821	ROD, SWITCHING	1							
4-1	1	1E6D10-26820	ROD, SWITCH	1						S	
	(A=F800206)										
5	1	22137-080000	WASHER, 8	2							
6	1	22217-160000	WASHER, SPRING 16	8							
7	1	22351-030032	PIN, SPRING 3.0X32	1							
8	1	22351-050032	PIN, SPRING 5.0X32	1							
9	1	22417-200160	PIN, COTTER 2.0X16	2							
10	1	26014-080202	BOLT, M8X 20	3							
11	1	26156-160452	BOLT, M16X 45 PLATED	8							

N:Old $\xleftarrow[\text{No}]{\text{Yes}}$ New, Q:Old $\xleftarrow[\text{Yes}]{\text{No}}$ New, R:Old $\xleftarrow[\text{Yes}]{\text{Yes}}$ New, S:Old $\xleftarrow[\text{No}]{\text{No}}$ New, W:Add, Z:Discontinued, F:Interchangeable by set, K:Q'ty Change

Copyright (C) 2018 YANMAR CO., LTD. All RightsReserved.

Fig.36. PIPING(REEL)

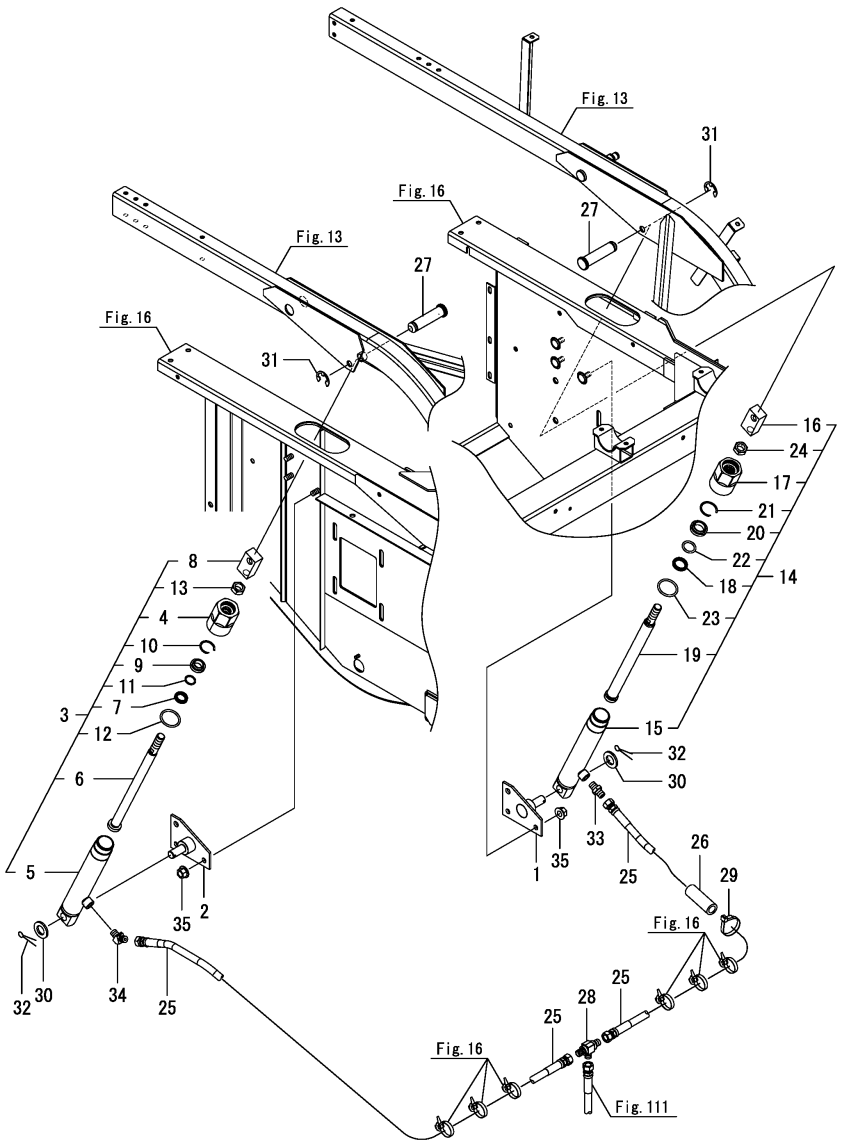

(A)=AW70GV,RSX(F)-IN (D)=
(B)= (E)=
(C)= (F)=

No.	Lev.	Parts No.	Description	Q'ty (A)	(B)	(C)	(D)	(E)	(F)	I	R
1	1	1E6C80-29100	FULCRUM,CYLINDER R	1							
1-1	1	1E6C80-29100-1	FULCRUM,CYLINDER R	1						S	1
	(A=*2018.08)										
2	1	1E6C80-29150	FULCRUM,CYLINDER L	1							
2-1	1	1E6C80-29150-1	FULCRUM,CYLINDER L	1						S	1
	(A=*2018.08)										
3	1	1E6C80-29200-1	CYLINDER,REEL LIFT L	1							
3-1	1	1E6C80-29201-1	CYLINDER,REEL LIFT L	1						N	
	(A=F800157)										
4	2	1E6C80-29210-1	BRACKET,ROD L	1							
5	2	1E6C80-29220-1	TUBE ASSY	1							
6	2	1E6C80-29250	ROD ASSY,CYLINDER L	1							
7	2	1E6B30-29280	SEAL, ROD 18	1							
8	2	1E6B30-29310	ADJUSTER	1							
8-1	2	1E6C80-29310	ADJUSTER,CYLINDER	1						N	
	(A=F800157)										
9	2	1E6470-29630	SCRAPER, SCB18	1							
10	2	1E6470-29640	CIRCLIP, SP18	1							
11	2	24311-000180	O-RING, 1AP18.0	1							
12	2	24311-000360	O-RING, 1AP36.0	1							
13	2	26777-160002	NUT, LOCK M16	1							
14	1	1E6C80-29400-1	CYLINDER,REEL LIFT R	1							
14-1	1	1E6C80-29401-1	CYLINDER,REEL LIFT R	1						N	
	(A=F800157)										
15	2	1E6C80-29220-1	TUBE ASSY	1							
16	2	1E6B30-29310	ADJUSTER	1							
16-1	2	1E6C80-29310	ADJUSTER,CYLINDER	1						N	
	(A=F800157)										
17	2	1E6C80-29410-1	BRACKET,ROD R	1							
18	2	1E6B30-29430	SEAL, ROD 22.4	1							
19	2	1E6C80-29450	ROD ASSY,CYLINDER R	1							
20	2	1E8270-29510	SCRAPER, SCB22.4	1							
21	2	1E8270-29520	RING, SNAP 22.4	1							
22	2	24311-000224	O-RING, 1AP22.4	1							
23	2	24311-000360	O-RING, 1AP36.0	1							
24	2	26777-160002	NUT, LOCK M16	1							
25	1	1E6C40-29530	HOSE,HYD. 04-1500	2							
26	1	1E6C40-29550	RUBBER,PROTECT 16	1							
27	1	1E6C80-29650	PIN, 14X52.5	2							
28	1	1E6C40-29680	CONNECTOR, PF1/4	1							
29	1	1E8559-84970	BAND, WIRE LOCK 140	1							
30	1	22137-160000	WASHER, 16	2							
31	1	22272-000120	RING, E-12	2							
32	1	22417-400320	PIN, COTTER 4.0X32	2							
33	1	23391-020000	JOINT, RGI-1/4	1							
34	1	23394-020000	JOINT, 45RGI-1/4	1							
35	1	26367-100002	NUT, M10	6							

Remarks
(1)Painting color=No.1, 2 : YANMAR NAVY GRAY, No.1-1, 2-1 : CATION E-COATING BLACK.

N:Old $\frac{\text{Yes}}{\text{No}}$ New, Q:Old $\frac{\text{No}}{\text{Yes}}$ New, R:Old $\frac{\text{Yes}}{\text{Yes}}$ New, S:Old $\frac{\text{No}}{\text{No}}$ New, W:Add, Z:Discontinued, F:Interchangeable by set, K:Q'ty Change

Copyright (C) 2018 YANMAR CO., LTD. All RightsReserved.

Fig.167. DUSTPROOF FAN

(A)=AW70GV,RSX(F)-IN (D)=
(B)= (E)=
(C)= (F)=

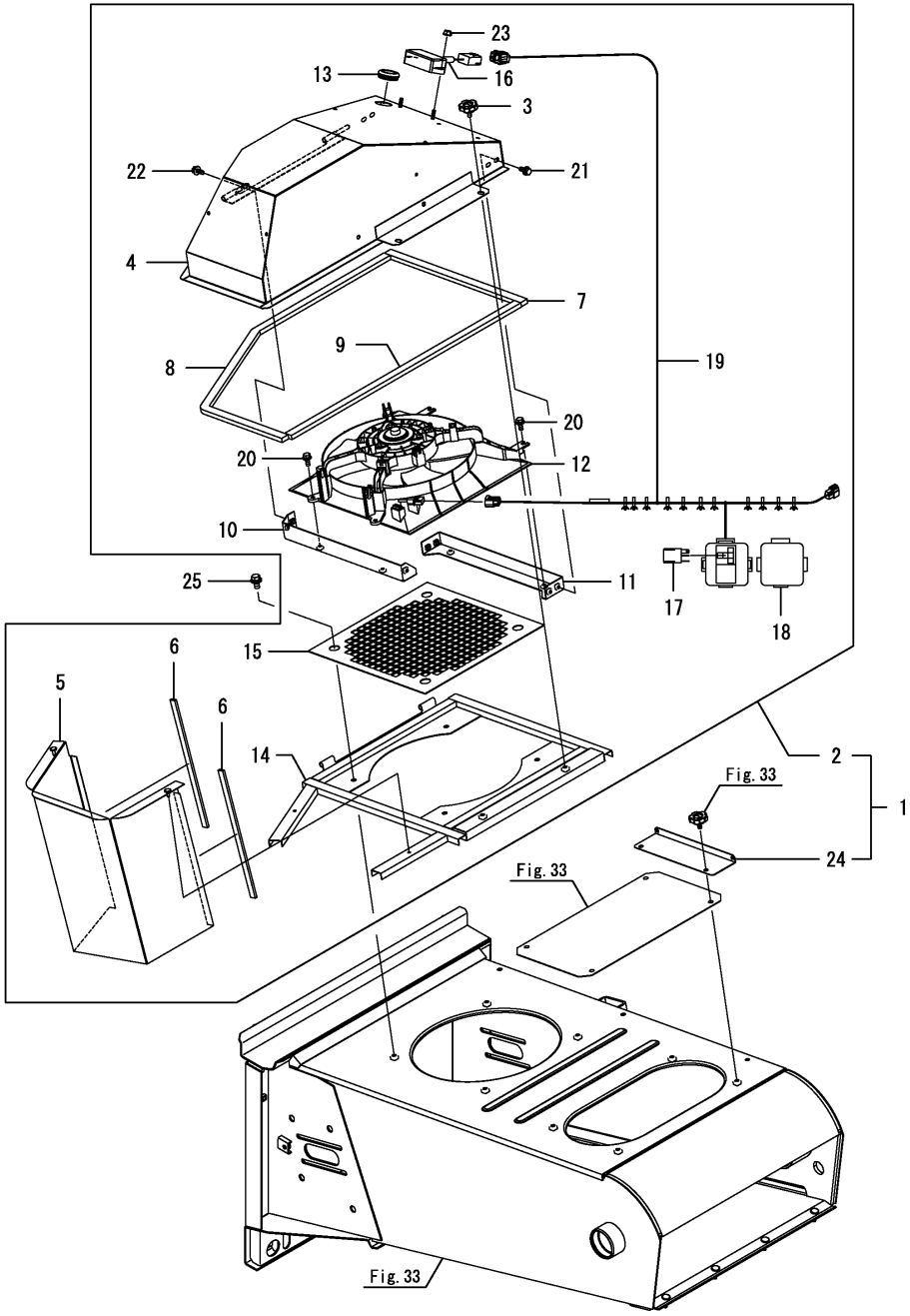

No.	Lev.	Parts No.	Description	Q'ty (A)	(B)	(C)	(D)	(E)	(F)	I	R
1	1	7E6C80-28200	FAN ASSY, DUST SUCT.	1							
2	2	1E6C80-28300	FAN, DUST SUCTI.	1							
3	3	1E8559-48150	BOLT, KNOB 8X15	2							
4	3	1S7596-61000	DUCT,UPPER	1							
5	3	1S7596-61200	DUCT, LOWER	1							
6	3	1S7596-61300	SEAL, 300X15X5	2							
7	3	1S7596-61310	SEAL, 420X20X10	1							
8	3	1S7596-61320	SEAL, 990X20X10	1							
9	3	1S7596-61330	SEAL, 695X20X10	1							
10	3	1S7596-61400	BRACKET, FAN A	1							
11	3	1S7596-61450	BRACKET, FAN B	1							
12	3	1S7596-61600	FAN, DUST SUCTION	1							
13	3	1S7596-61700	GROMMET, 36	1							
14	3	1S7596-62000	BASE,DUCT	1							
15	3	1S7596-62230	NET, DUSTPROOF 15	1							
16	3	1E6C35-80500	TIMER UNIT, 5-60MIN	1							
16-1	3	1E6C35-80501	TIMER UNIT, 5-60MIN	1						N	
	(A=*2018.05)										
16-2	3	1S7596-80500	TIMER UNIT, 2-017MIN	1						R	
	(A=F800157)										
17	3	1E9256-82600	RELAY, ISO 20A	1							
18	3	1E9355-82600	COVER, RELAY BOX 2P	1							
19	3	1S7596-84500	HARNESS,FAN	1							
20	3	26014-060162	BOLT, M6X 16	4							
21	3	26014-060162	BOLT, M6X 16	4							
22	3	26014-060162	BOLT, M6X 16	3							
23	3	26367-060002	NUT, M6	2							
24	2	1S7596-62100	PLATE,CLIP BAND	1							
25	1	26014-080162	BOLT, M8X 16	4							

N:Old $\xleftrightarrow[\text{No}]{\text{Yes}}$ New, Q:Old $\xleftrightarrow[\text{Yes}]{\text{No}}$ New, R:Old $\xleftrightarrow[\text{Yes}]{\text{Yes}}$ New, S:Old $\xleftrightarrow[\text{No}]{\text{No}}$ New, W:Add, Z:Discontinued, F:Interchangeable by set, K:Q'ty Change

Copyright (C) 2018 YANMAR CO., LTD. All RightsReserved.

Fig.37. THRESH FRAME MOUNT

(A)=AW70GV,RSX(F)-IN (D)=
(B)= (E)=
(C)= (F)=

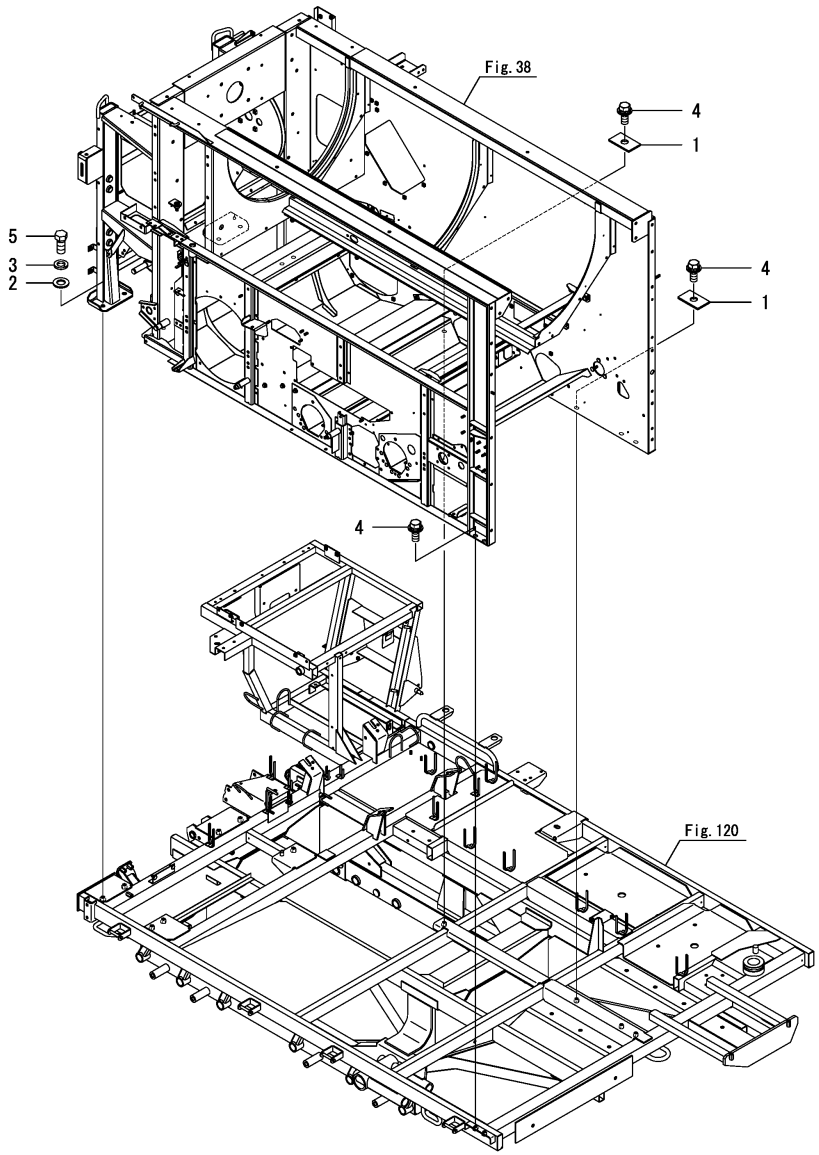

No.	Lev.	Parts No.	Description	Q'ty (A)	(B)	(C)	(D)	(E)	(F)	I	R
1	1	1E6B30-31360	PLATE, 30X50	2							
1-1	1	1E6B30-31360-1	PLATE, 30X50	2						S	1
	(A=*2018.08)										
2	1	22137-140000	WASHER, 14	7							
3	1	22217-140000	WASHER, SPRING 14	7							
4	1	26014-120302	BOLT, M12X 30	6							
5	1	26156-140302	BOLT, M14X 30 PLATED	7							

Remarks
(1)Painting color=No.1 : YANMAR NAVY GRAY, No.1-1 : CATION E-COATING BLACK.

N:Old $\xleftrightarrow[\text{No}]{\text{Yes}}$ New, Q:Old $\xleftrightarrow[\text{Yes}]{\text{No}}$ New, R:Old $\xleftrightarrow[\text{Yes}]{\text{Yes}}$ New, S:Old $\xleftrightarrow[\text{No}]{\text{No}}$ New, W:Add, Z:Discontinued, F:Interchangeable by set, K:Q'ty Change

Copyright (C) 2018 YANMAR CO., LTD. All RightsReserved.

Fig.38. THRESH FRAME

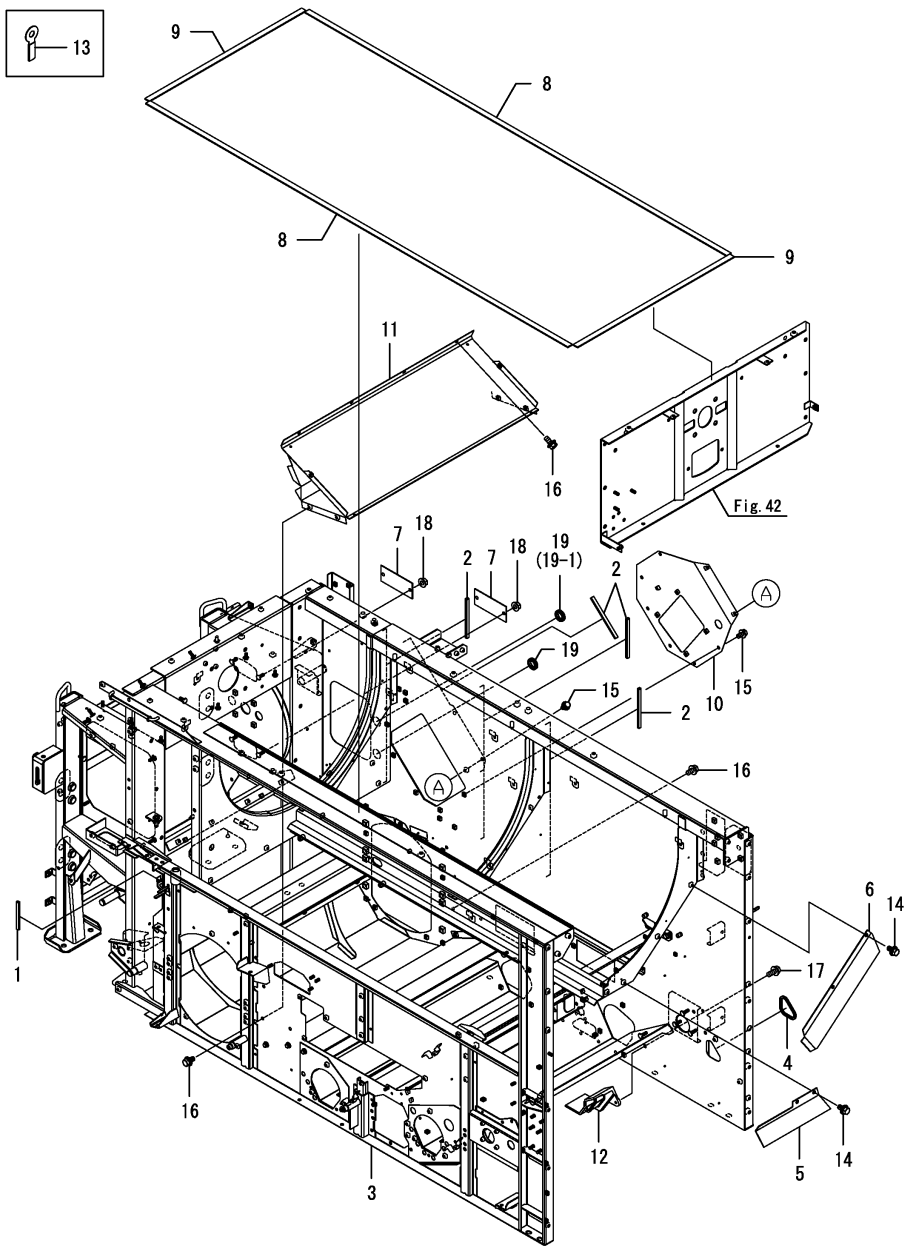

(A)=AW70GV,RSX(F)-IN (D)=
(B)= (E)=
(C)= (F)=

No.	Lev.	Parts No.	Description	Q'ty (A)	(B)	(C)	(D)	(E)	(F)	I	R
1	1	1E6B00-03280	PROTECTOR, 70	1						Z	
	(A=F800011)										
2	1	1E6B30-26600	PROTECTOR, 100	4							
3	1	1E6C80-31002	FRAME, THRESH	1							
4	1	1E6C80-31470	TRIM, 200	1							
5	1	1E6B35-31640	GUARD, BA	1							
6	1	1E6B35-31680	GUARD, BB	1							
7	1	1E6B30-32640	COVER, CLEANING	2							
8	1	1E6B30-33511	SEAL,ROTOR COVER A	2							
9	1	1E6B30-33521	SEAL,ROTOR COVER B	2							
10	1	1E6C40-33650	PLATE, PLUG	1							
11	1	1E6B35-44602	GUIDE,WIND UP	1							
12	1	1E6C80-46830	SUPPORT,2ND GUTTER B	1							
13	1	1J5025-47010	CLAMP, WIRE 8	1							
14	1	26014-080162	BOLT, M8X 16	4							
15	1	26014-080162	BOLT, M8X 16	8							
16	1	26014-080162	BOLT, M8X 16	10							
17	1	26014-080202	BOLT, M8X 20	2							
18	1	26367-080002	NUT, M8	4							
19	1	29311-254000	GROMET, 25.0X4	2							
19-1	1	29311-254000	GROMET, 25.0X4	1						K	
	(A=F800011)										

Remarks
* This item is applicable to [(A)=F800032] or previous machines(Refer to Fig.168, 169).

N:Old $\xleftarrow[\text{No}]{\text{Yes}}$ New, Q:Old $\xleftarrow[\text{Yes}]{\text{No}}$ New, R:Old $\xleftarrow[\text{Yes}]{\text{Yes}}$ New, S:Old $\xleftarrow[\text{No}]{\text{No}}$ New, W:Add, Z:Discontinued, F:Interchangeable by set, K:Q'ty Change

Copyright (C) 2018 YANMAR CO., LTD. All RightsReserved.

Fig.168. (38A)THRESH FRAME(1)

(A)=AW70GV,RSX(F)-IN (D)=
(B)= (E)=
(C)= (F)=

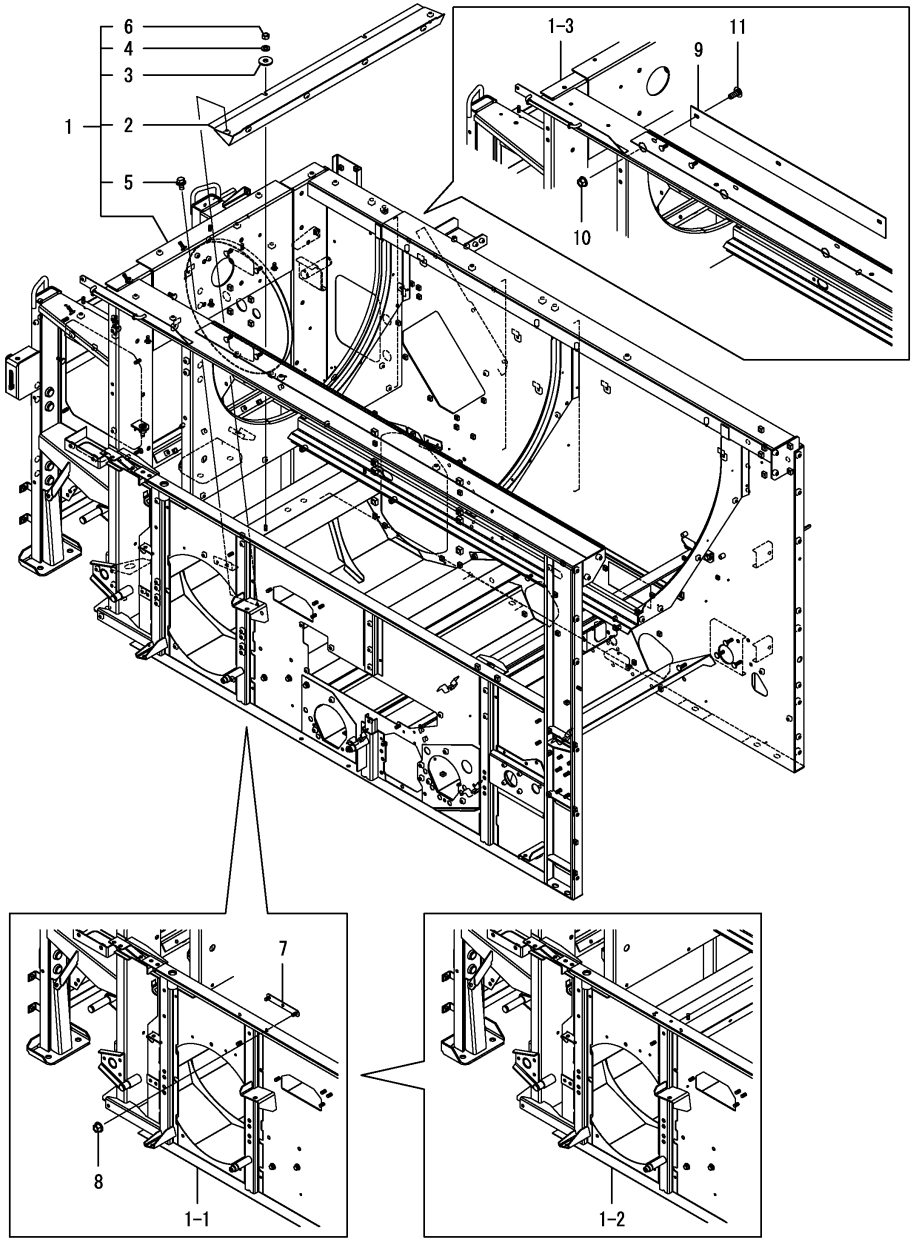

No.	Lev.	Parts No.	Description	Q'ty (A)	(B)	(C)	(D)	(E)	(F)	I	R
1	1	1E6C80-31003	FRAME, THRESH	1							
1-1	1	1E6C80-31004	FRAME, THRESH	1						N	
	(A=F800049)										
1-2	1	1E6C80-31005	FRAME, THRESH	1						S	
	(A=F800083)										
1-3	1	1E6C80-31006	FRAME, THRESH	1						N	
	(A=F800206)										
2	2	1E6C80-44050	CASE, UPPER B	1							
3	2	22157-080000	WASHER, 8	2							
4	2	22217-080000	WASHER, SPRING 8	2							
5	2	26014-080162	BOLT, M8X 16	2							
6	2	26717-080002	NUT, M8	2							
7	1	1E6C85-31950	PLATE, PLUG	1						W	
	(A=F800049)										
8	1	26367-080002	NUT, M8	2						W	
	(A=F800049)										
9	1	1E6C85-33310	SUPPORT, FRAME A	1						W	
	(A=F800206)										
10	1	26367-080002	NUT, M8	3						W	
	(A=F800206)										
11	1	26487-080202	BOLT, M8X20	3						W	
	(A=F800206)										

Remarks
* This item is applicable to [(A)=F800033] or previous machines(Refer to Fig.38).

N:Old $\xleftarrow[\text{No}]{\text{Yes}}$ New, Q:Old $\xleftarrow[\text{Yes}]{\text{No}}$ New, R:Old $\xleftarrow[\text{Yes}]{\text{Yes}}$ New, S:Old $\xleftarrow[\text{No}]{\text{No}}$ New, W:Add, Z:Discontinued, F:Interchangeable by set, K:Q'ty Change

Copyright (C) 2018 YANMAR CO., LTD. All RightsReserved.

Fig.169. (38B)THRESH FRAME(2)

(A)=AW70GV,RSX(F)-IN (D)=
(B)= (E)=
(C)= (F)=

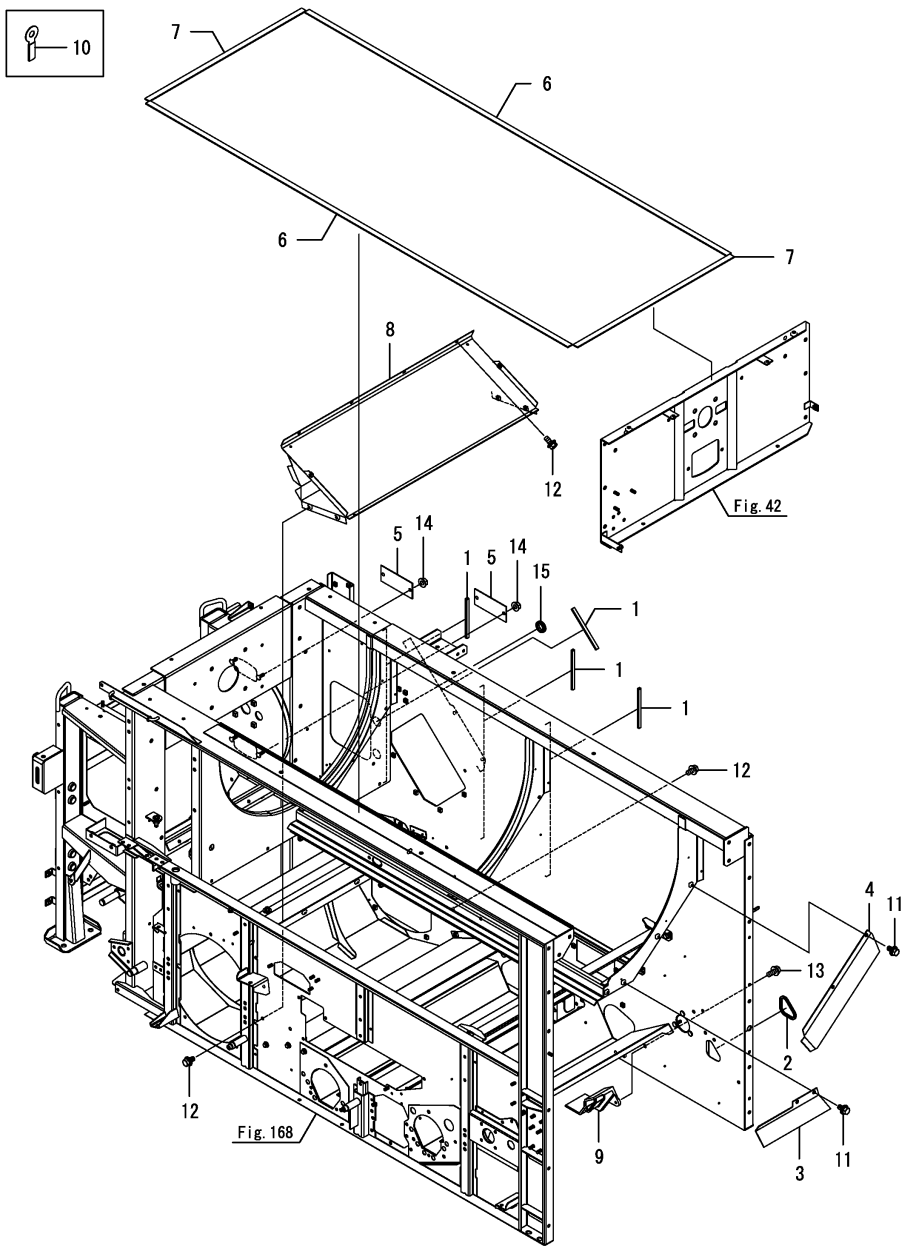

No.	Lev.	Parts No.	Description	Q'ty (A)	(B)	(C)	(D)	(E)	(F)	I	R
1	1	1E6B30-26600	PROTECTOR, 100	4							
2	1	1E6C80-31470	TRIM, 200	1							
3	1	1E6B35-31640	GUARD, BA	1							
4	1	1E6B35-31680	GUARD, BB	1							
5	1	1E6B30-32640	COVER, CLEANING	2							
5-1	1	1E6B30-32641	COVER, CLEANING	2						N	
	(A=F800157)										
6	1	1E6B30-33511	SEAL,ROTOR COVER A	2							
7	1	1E6B30-33521	SEAL,ROTOR COVER B	2							
8	1	1E6B35-44602	GUIDE,WIND UP	1							
9	1	1E6C80-46830	SUPPORT,2ND GUTTER B	1							
10	1	1J5025-47010	CLAMP, WIRE 8	1							
11	1	26014-080162	BOLT, M8X 16	4							
12	1	26014-080162	BOLT, M8X 16	10							
13	1	26014-080202	BOLT, M8X 20	2							
14	1	26367-080002	NUT, M8	4							
15	1	29311-254000	GROMET, 25.0X4	1							

Remarks
* This item is applicable to [(A)=F800033] or previous machines(Refer to Fig.38).

N:Old $\xleftarrow[\text{No}]{\text{Yes}}$ New, Q:Old $\xleftarrow[\text{Yes}]{\text{No}}$ New, R:Old $\xleftarrow[\text{Yes}]{\text{Yes}}$ New, S:Old $\xleftarrow[\text{No}]{\text{No}}$ New, W:Add, Z:Discontinued, F:Interchangeable by set, K:Q'ty Change

Copyright (C) 2018 YANMAR CO., LTD. All RightsReserved.

Fig.39. CLEANING COVER

(A)=AW70GV,RSX(F)-IN (D)=
(B)= (E)=
(C)= (F)=

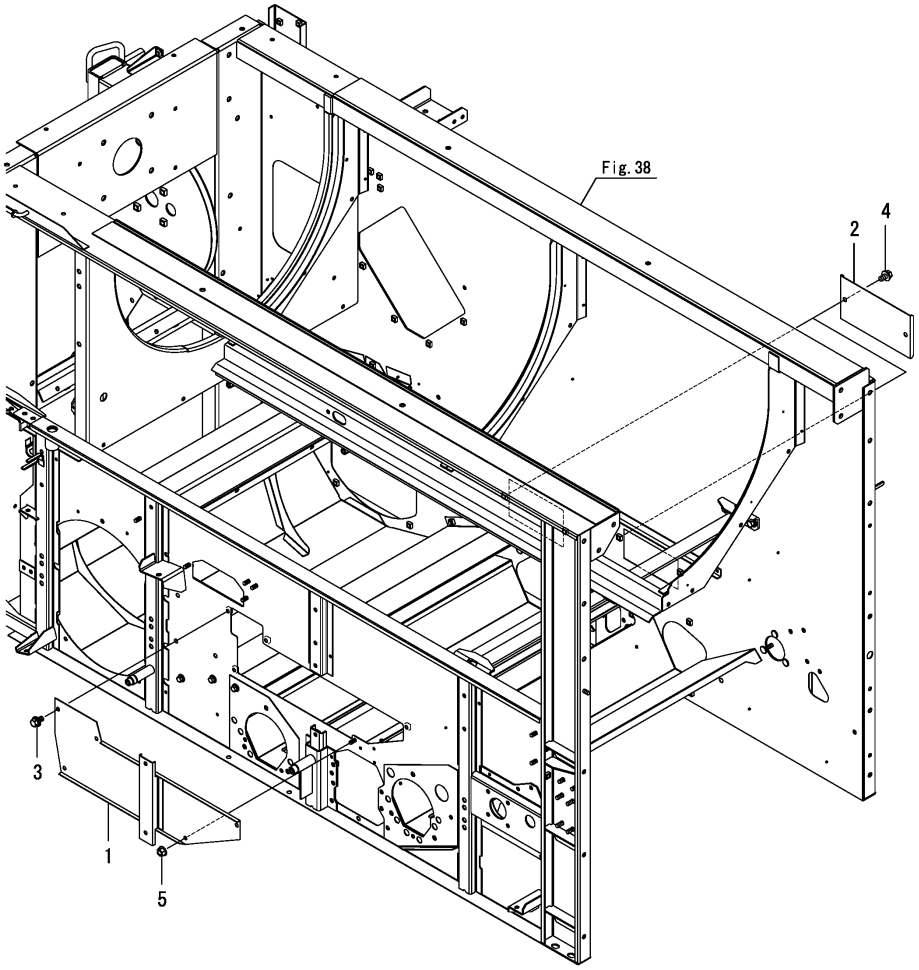

No.	Lev.	Parts No.	Description	Q'ty (A)	(B)	(C)	(D)	(E)	(F)	I	R
1	1	1E6C80-31400	COVER, CLEANING	1							
2	1	1E6C80-31450	COVER, CLEANING	2							
3	1	26014-080162	BOLT, M8X 16	6							
4	1	26014-080162	BOLT, M8X 16	4							
5	1	26367-080002	NUT, M8	1							

N:Old $\xleftrightarrow[\text{No}]{\text{Yes}}$ New, Q:Old $\xleftrightarrow[\text{Yes}]{\text{No}}$ New, R:Old $\xleftrightarrow[\text{Yes}]{\text{Yes}}$ New, S:Old $\xleftrightarrow[\text{No}]{\text{No}}$ New, W:Add, Z:Discontinued, F:Interchangeable by set, K:Q'ty Change

Copyright (C) 2018 YANMAR CO., LTD. All RightsReserved.

Fig.40. PLATE(INLET)

(A)=AW70GV,RSX(F)-IN
(B)=
(C)=
(D)=
(E)=
(F)=

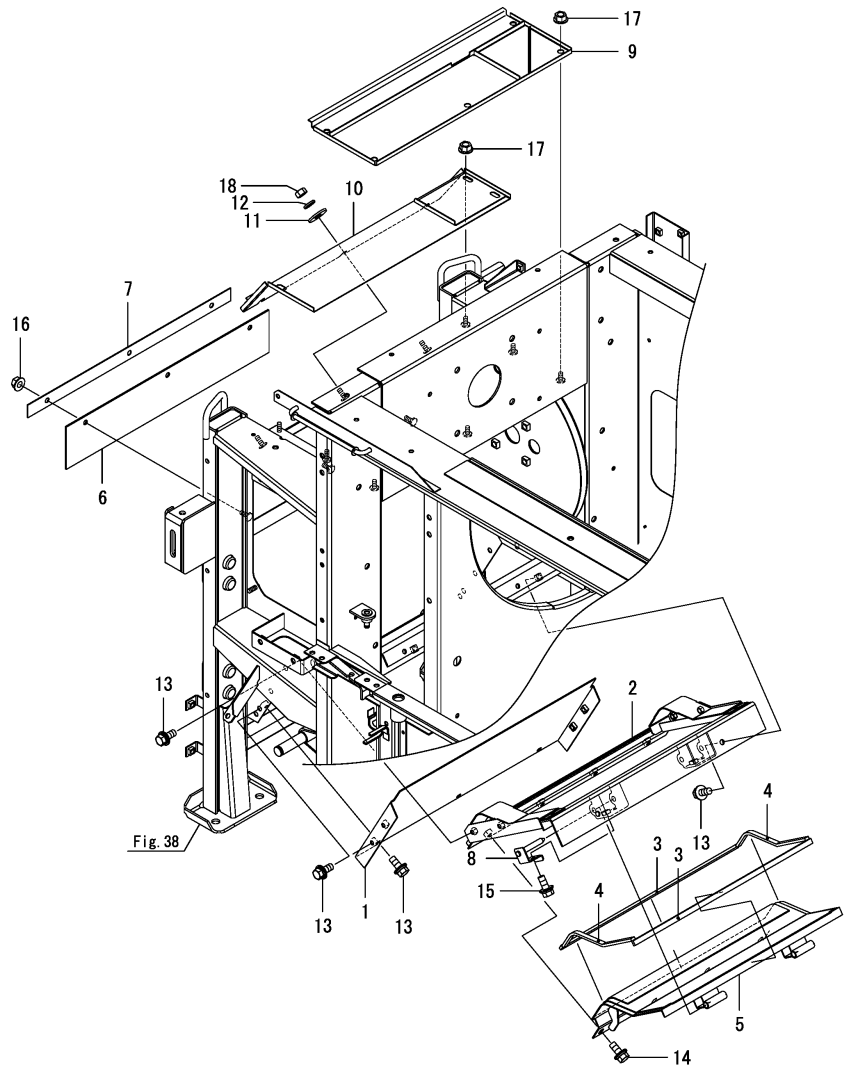

No.	Lev.	Parts No.	Description	Q'ty (A)	(B)	(C)	(D)	(E)	(F)	I	R
1	1	1E6C80-32000	PLATE, INLET A	1							
2	1	1E6C80-32020	PLATE, INLET	1							
2-1	1	1E6C80-32020-1	PLATE, INLET	1						S	1
	(A=*2018.08)										
3	1	1E6C80-32180	SEAL,486X10X5	2							
4	1	1E6C80-32190	SEAL,225X10X5	2							
5	1	1E6C80-32200	COVER,INLET BOTTOM	1							
6	1	1E6B30-32261	SEAL, UPPER	1							
7	1	1E6B30-32270	RETAINER, SEAL UPPER	1							
8	1	1E6C80-32320	PIN,FULCRUM	2							
9	1	1E6C80-33750	COVER, INLET UPPER R	1							
10	1	1E6C80-33800	COVER, INLET UPPER F	1							
11	1	22157-080000	WASHER, 8	3							
12	1	22217-080000	WASHER, SPRING 8	3							
13	1	26014-080202	BOLT, M8X 20	13							
14	1	26014-080202	BOLT, M8X 20	4							
15	1	26014-080202	BOLT, M8X 20	2							
16	1	26367-080002	NUT, M8	3							
17	1	26367-080002	NUT, M8	7							
18	1	26717-080002	NUT, M8	3							

Remarks
(1)Painting color=No.2 : YANMAR NAVY GRAY, No.2-1 : CATION E-COATING BLACK.

N:Old $\frac{\text{Yes}}{\text{No}}$ New, Q:Old $\frac{\text{No}}{\text{Yes}}$ New, R:Old $\frac{\text{Yes}}{\text{Yes}}$ New, S:Old $\frac{\text{No}}{\text{No}}$ New, W:Add, Z:Discontinued, F:Interchangeable by set, K:Q'ty Change

Copyright (C) 2018 YANMAR CO., LTD. All RightsReserved.

Fig.41. PLATE(FEED)

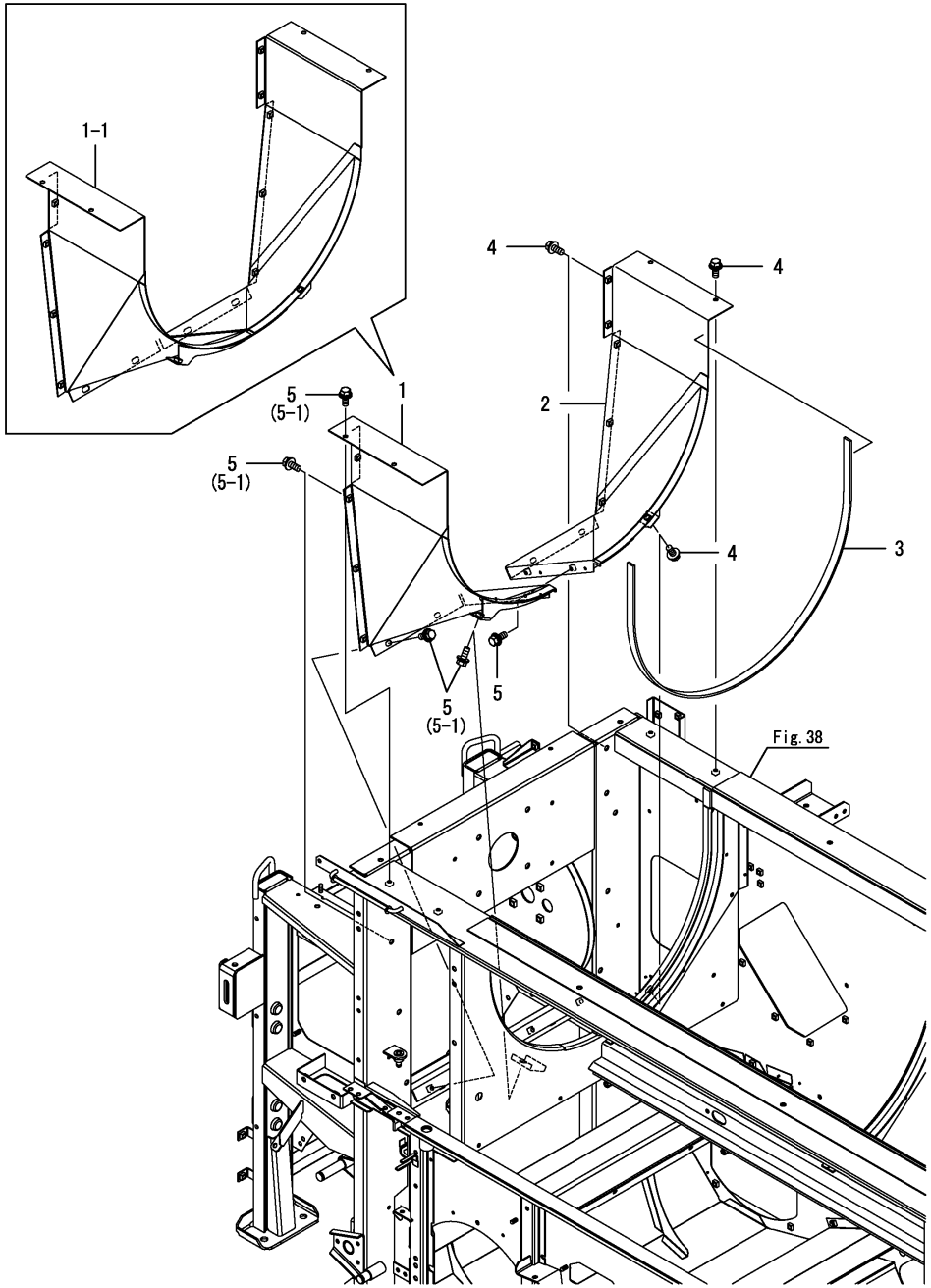

(A)=AW70GV,RSX(F)-IN
(B)=
(C)=
(D)=
(E)=
(F)=

No.	Lev.	Parts No.	Description	Q'ty (A)	(B)	(C)	(D)	(E)	(F)	I	R
1	1	1E6B30-32103	PLATE, FEED L	1							
1-1	1	1E6C80-32150	PLATE, FEED	1						S	
	(A=F800105)										
1-2	1	1E6C80-32151	PLATE, FEED	1						R	
	(A=F800320)										
2	1	1E6B30-32153	PLATE, FEED R	1						Z	
	(A=F800105)										
3	1	1E6B30-32250	SEAL, INLET	1							
4	1	26014-080202	BOLT, M8X 20	10							
5	1	26014-080202	BOLT, M8X 20	11							
5-1	1	26014-080202	BOLT, M8X 20	9						K	
	(A=F800105)										

N:Old $\xleftrightarrow[\text{No}]{\text{Yes}}$ New, Q:Old $\xleftrightarrow[\text{Yes}]{\text{No}}$ New, R:Old $\xleftrightarrow[\text{Yes}]{\text{Yes}}$ New, S:Old $\xleftrightarrow[\text{No}]{\text{No}}$ New, W:Add, Z:Discontinued, F:Interchangeable by set, K:Q'ty Change

Copyright (C) 2018 YANMAR CO., LTD. All RightsReserved.

Fig.42. FRAME(REAR)

(A)=AW70GV,RSX(F)-IN (D)=
(B)= (E)=
(C)= (F)=

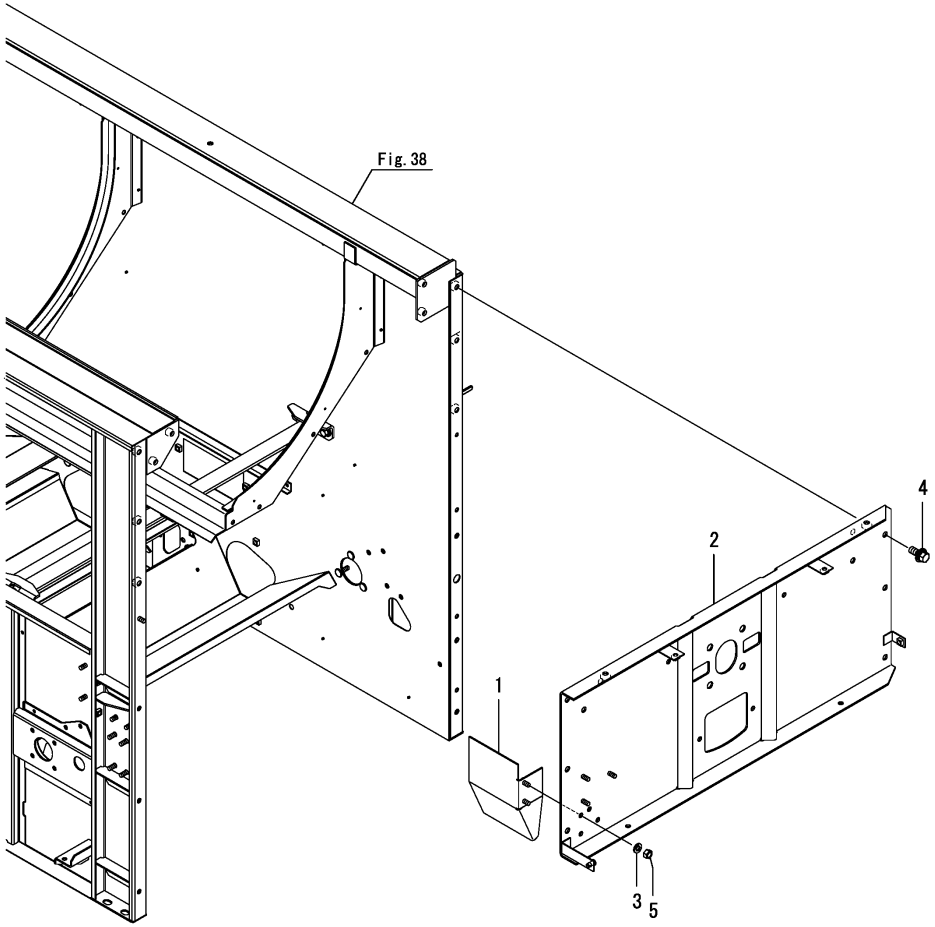

No.	Lev.	Parts No.	Description	Q'ty (A)	(B)	(C)	(D)	(E)	(F)	I	R
1	1	1E6B35-31481	GUIDE, STRAW DIS	1							
2	1	1E6C40-32281-1	FRAME,UPPER REAR	1							
3	1	22217-080000	WASHER, SPRING 8	2							
4	1	26014-100252	BOLT, M10X 25	10							
5	1	26717-080002	NUT, M8	2							

N:Old ◄Yes/No► New, Q:Old ◄No/Yes► New, R:Old ◄Yes/Yes► New, S:Old ◄No/No► New, W:Add, Z:Discontinued, F:Interchangeable by set, K:Q'ty Change

Copyright (C) 2018 YANMAR CO., LTD. All RightsReserved.

Fig.43. ROTOR COVER

(A)=AW70GV,RSX(F)-IN (D)=
(B)= (E)=
(C)= (F)=

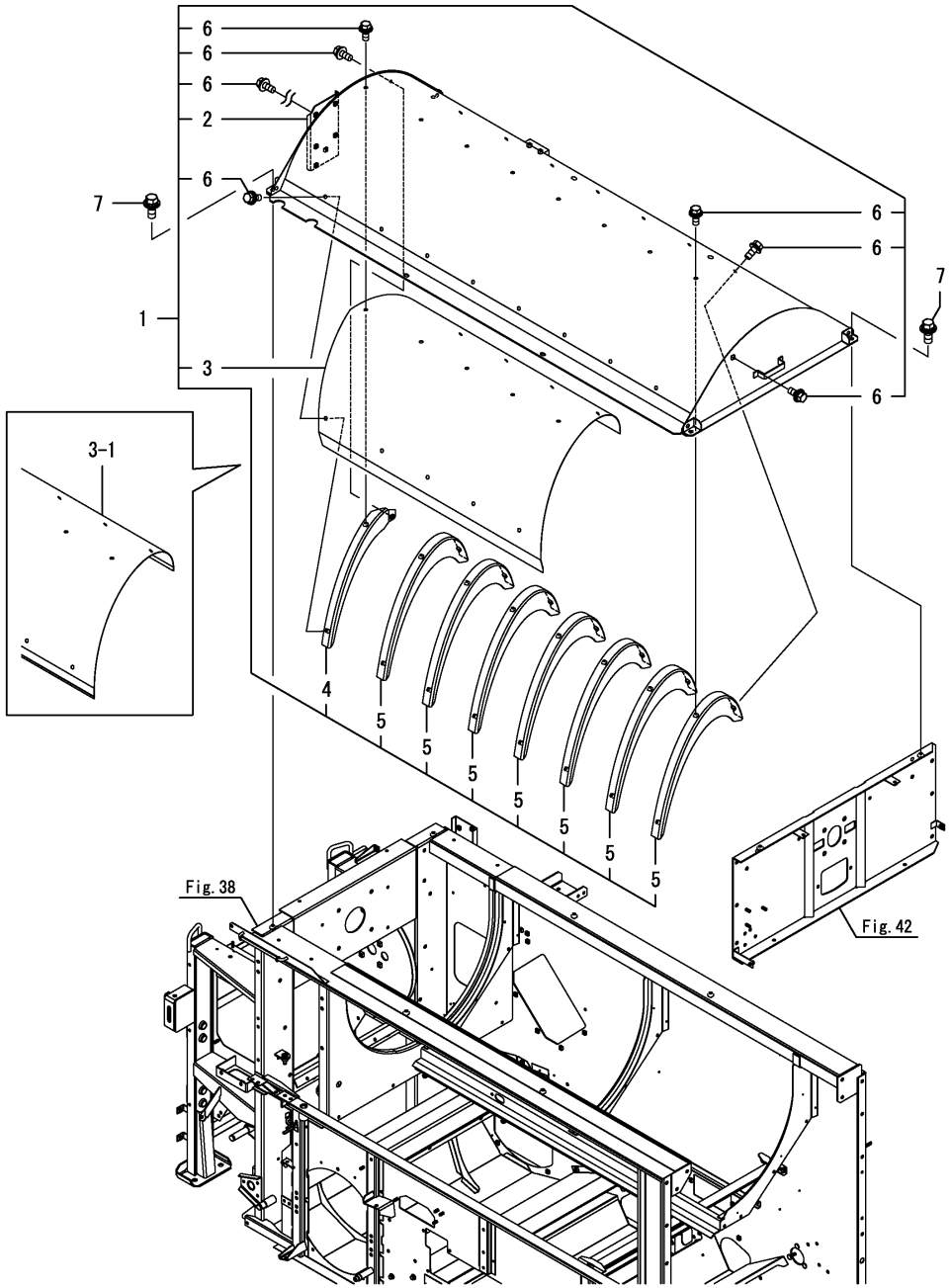

No.	Lev.	Parts No.	Description	Q'ty (A)	(B)	(C)	(D)	(E)	(F)	I	R
1	1	1E6C45-33502-1	COVER ASSY,ROTOR	1							
1-1	1	1E6C45-33503-1	COVER ASSY,ROTOR	1						N	
	(A=F800206)										
2	2	1E6C45-33002-1	COVER,ROTOR	1							
3	2	1E6B35-33110-1	SUPPORT,ROTOR COVER	1							
3-1	2	1E6C85-33110	SUPPORT,ROTOR COVER	1						S	
	(A=F800206)										
4	2	1E6B35-33130-1	PLATE, SCAVEGING A	1							
5	2	1E6B35-33170-1	PLATE,SCAVEING C	7							
6	2	26014-080202	BOLT, M8X 20	31							
7	1	26014-100252	BOLT, M10X 25	8							

N:Old $\xleftarrow[\text{No}]{\text{Yes}}$ New, Q:Old $\xleftarrow[\text{Yes}]{\text{No}}$ New, R:Old $\xleftarrow[\text{Yes}]{\text{Yes}}$ New, S:Old $\xleftarrow[\text{No}]{\text{No}}$ New, W:Add, Z:Discontinued, F:Interchangeable by set, K:Q'ty Change

Copyright (C) 2018 YANMAR CO., LTD. All RightsReserved.

Fig.44. FRAME(CONNECT)

(A)=AW70GV,RSX(F)-IN
(B)=
(C)=
(D)=
(E)=
(F)=

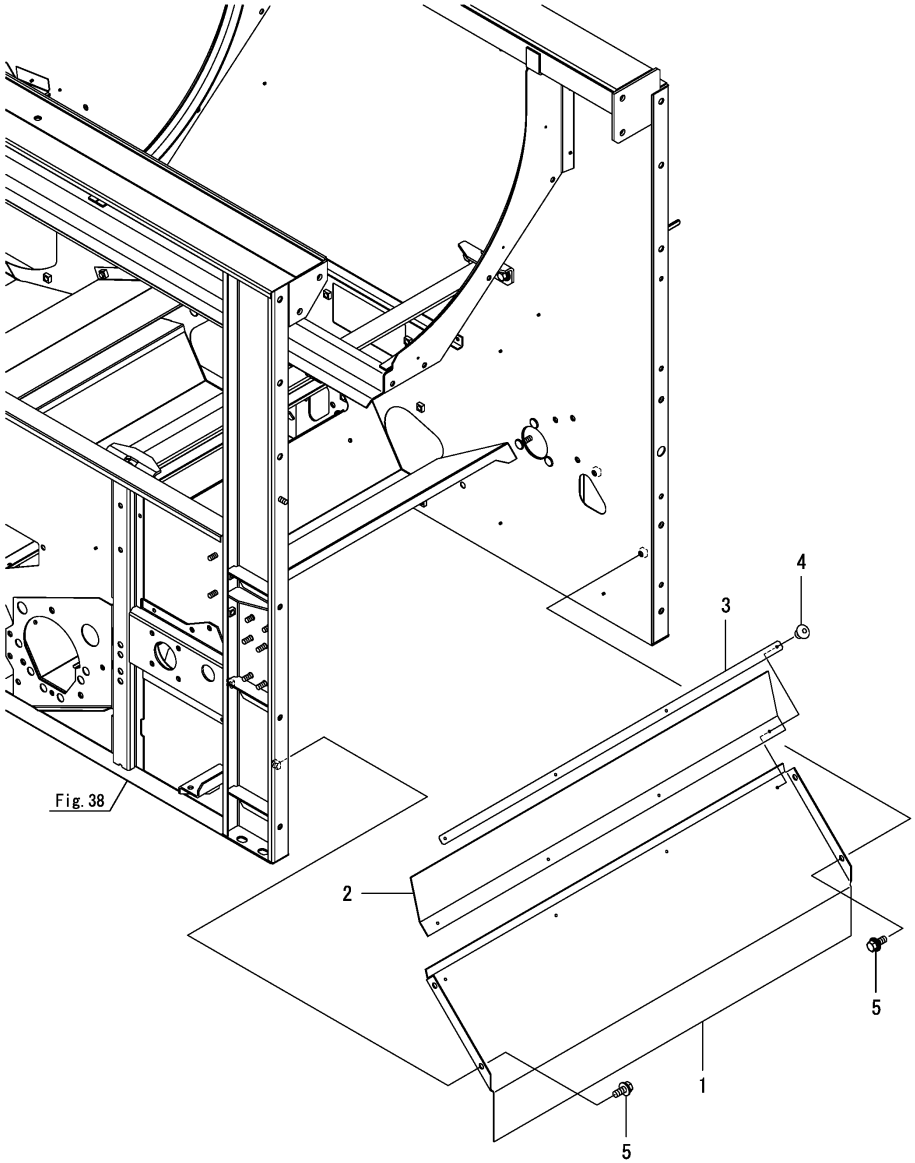

No.	Lev.	Parts No.	Description	Q'ty (A)	(B)	(C)	(D)	(E)	(F)	I	R
1	1	1E6C80-33930	GUTTER, STRAW DIS	1							
2	1	1E6C80-33940	SEAL, REAR	1							
3	1	1E6C80-33950	PLATE	1							
4	1	22697-400321	RIVET, 4.0X 3.2	4							
5	1	26014-080202	BOLT, M8X 20	4							

N:Old ◄Yes/No► New, Q:Old ◄No/Yes► New, R:Old ◄Yes/Yes► New, S:Old ◄No/No► New, W:Add, Z:Discontinued, F:Interchangeable by set, K:Q'ty Change

Copyright (C) 2018 YANMAR CO., LTD. All RightsReserved.

Fig.45. SIDE COVER BRACKET

(A)=AW70GV,RSX(F)-IN (D)=
(B)= (E)=
(C)= (F)=

No.	Lev.	Parts No.	Description	Q'ty (A)	(B)	(C)	(D)	(E)	(F)	I	R
1	1	1E6B30-34700	BRACKET, SIDE COVER	1							
1-1	1	1E6B30-34700-1	BRACKET, SIDE COVER	1						S	1
	(A=*2018.08)										
2	1	1E6B30-34731	STAY, SIDE COVER	1							
3	1	26367-080002	NUT, M8	4							

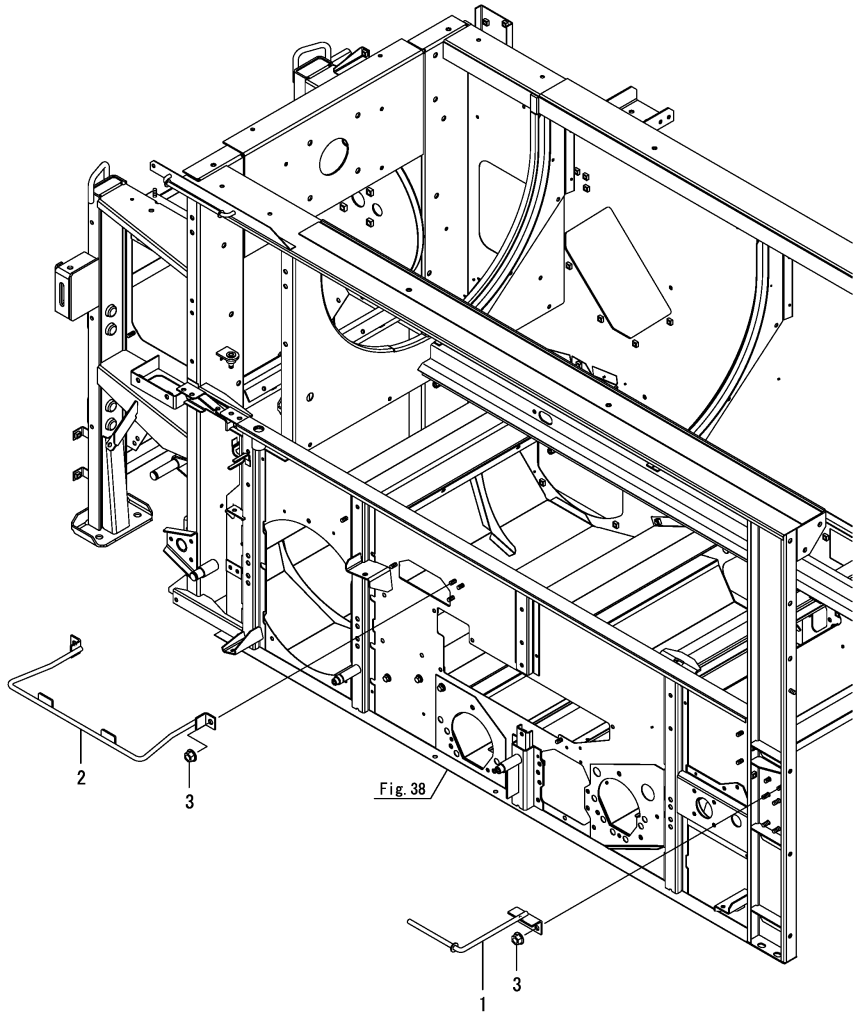

Remarks
(1)Painting color=No.1 : YANMAR NAVY GRAY, No.1-1 : CATION E-COATING BLACK.

N:Old $\frac{\text{Yes}}{\text{No}}$ New, Q:Old $\frac{\text{No}}{\text{Yes}}$ New, R:Old $\frac{\text{Yes}}{\text{Yes}}$ New, S:Old $\frac{\text{No}}{\text{No}}$ New, W:Add, Z:Discontinued, F:Interchangeable by set, K:Q'ty Change

Copyright (C) 2018 YANMAR CO., LTD. All RightsReserved.

Fig.46. SIDE COVER

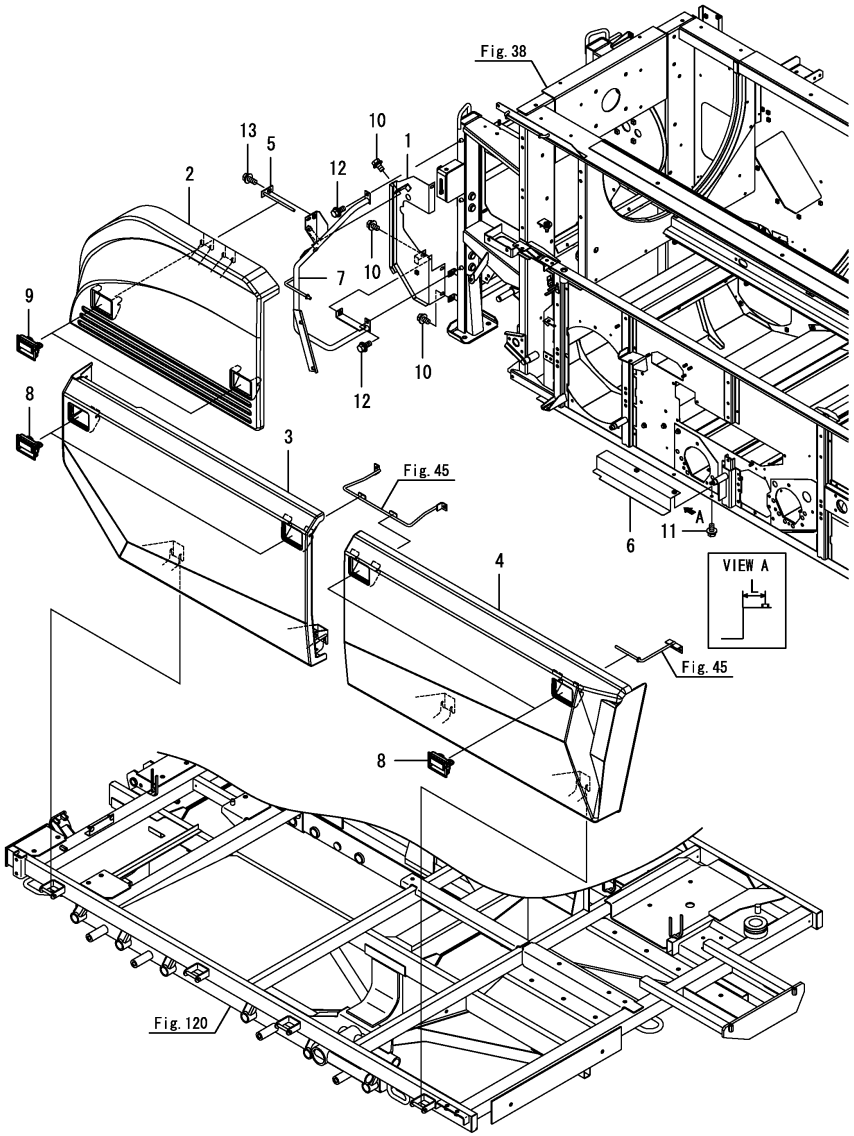

(A)=AW70GV,RSX(F)-IN (D)=
(B)= (E)=
(C)= (F)=

No.	Lev.	Parts No.	Description	Q'ty (A)	(B)	(C)	(D)	(E)	(F)	I	R
1	1	1E6B30-34142-1	COVER, FH DRIVE	1							
1-1	1	1E6B30-34142-2	COVER, FH DRIVE	1						S	3
	(A=*2018.12)										
2	1	1E6C80-34230	COVER, SIDE UPPER	1							
3	1	1E6C80-34300	COVER,SIDE FRONT	1							
3-1	1	1E6C80-34301	COVER,SIDE FRONT	1						N	
	(A=F800269)										
4	1	1E6C80-34340	COVER,SIDE REAR	1							
4-1	1	1E6C80-34341	COVER,SIDE REAR	1						N	
	(A=F800269)										
5	1	1E6B30-34490	HOOK ASSY	1							
5-1	1	1E6B30-34490-1	HOOK ASSY	1						S	2
	(A=*2018.08)										
6	1	1E6C80-34650	COVER, PULLEY	1							
6-1	1	1E6C80-34651	COVER, PULLEY	1						S	1
	(A=F800033)										
7	1	1E6B30-34903-1	FRAME,COVER STAY	1							
8	1	1E6C80-34900	HANDLE,LOCK RED	4							
9	1	1E6C80-34910	HANDLE,LOCK WHITE	2							
10	1	26014-080162	BOLT, M8X 16	5							
11	1	26014-080162	BOLT, M8X 16	2							
12	1	26014-080202	BOLT, M8X 20	2							
13	1	26014-080202	BOLT, M8X 20	1							

Remarks
(1)L=No.6 : 40mm, No.6-1 : 35mm.
(2)Painting color=No.5 : YANMAR NAVY GRAY, No.5-1 : CATION E-COATING BLACK.
(3)Painting color=No.1 : YANMAR NAVY GRAY, No.1-1 : CATION E-COATING BLACK.

N:Old $\xleftrightarrow[\text{No}]{\text{Yes}}$ New, Q:Old $\xleftrightarrow[\text{Yes}]{\text{No}}$ New, R:Old $\xleftrightarrow[\text{Yes}]{\text{Yes}}$ New, S:Old $\xleftrightarrow[\text{No}]{\text{No}}$ New, W:Add, Z:Discontinued, F:Interchangeable by set, K:Q'ty Change

Copyright (C) 2018 YANMAR CO., LTD. All RightsReserved.

Fig.47. COVER(BASE)

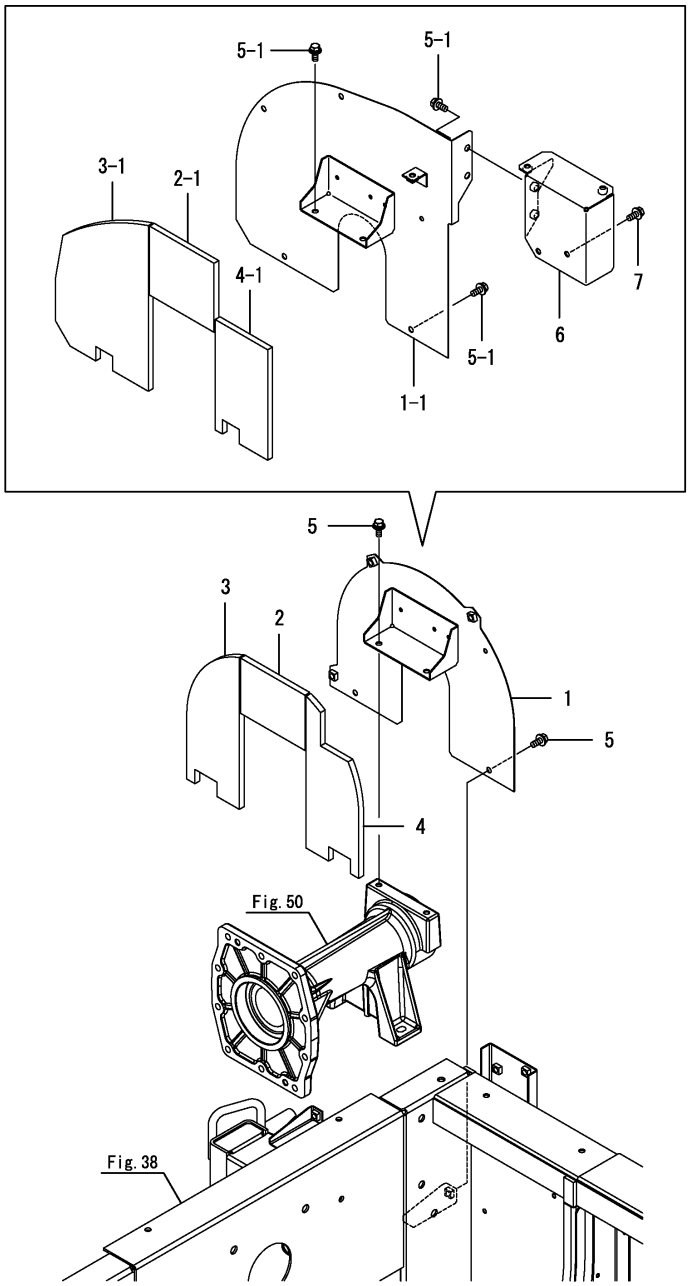

(A)=AW70GV,RSX(F)-IN (D)=
(B)= (E)=
(C)= (F)=

No.	Lev.	Parts No.	Description	Q'ty (A)	(B)	(C)	(D)	(E)	(F)	I	R
1	1	1E6C80-34250	BASE, COVER	1							
1-1	1	1E6D10-34251	BASE, COVER	1						S	
	(A=F800206)										
1-2	1	1E6D10-34252	BASE, COVER	1						N	
	(A=F800213)										
2	1	1E6C80-34350	SPONGE, A	1							
2-1	1	1E6D10-34350	SPONGE, A	1						S	
	(A=F800206)										
3	1	1E6C80-34360	SPONGE, B	1							
3-1	1	1E6D10-34360	SPONGE, B	1						S	
	(A=F800206)										
3-2	1	1E6D10-34361	SPONGE, B	1						N	
	(A=F800213)										
4	1	1E6C80-34370	SPONGE, C	1							
4-1	1	1E6D10-34370	SPONGE, C	1						S	
	(A=F800206)										
4-2	1	1E6D10-34371	SPONGE, C	1						N	
	(A=F800213)										
5	1	26014-080202	BOLT, M8X 20	4							
5-1	1	26014-080202	BOLT, M8X 20	6						K	
	(A=F800206)										
6	1	1E6C80-43800	FRAME, LEVER A	1						W	
	(A=F800206)										
7	1	26014-080202	BOLT, M8X 20	2						W	
	(A=F800206)										

N:Old $\xleftarrow[\text{No}]{\text{Yes}}$ New, Q:Old $\xleftarrow[\text{Yes}]{\text{No}}$ New, R:Old $\xleftarrow[\text{Yes}]{\text{Yes}}$ New, S:Old $\xleftarrow[\text{No}]{\text{No}}$ New, W:Add, Z:Discontinued, F:Interchangeable by set, K:Q'ty Change

Copyright (C) 2018 YANMAR CO., LTD. All RightsReserved.

Fig.48. FRONT COVER

(A)=AW70GV,RSX(F)-IN (D)=
(B)= (E)=
(C)= (F)=

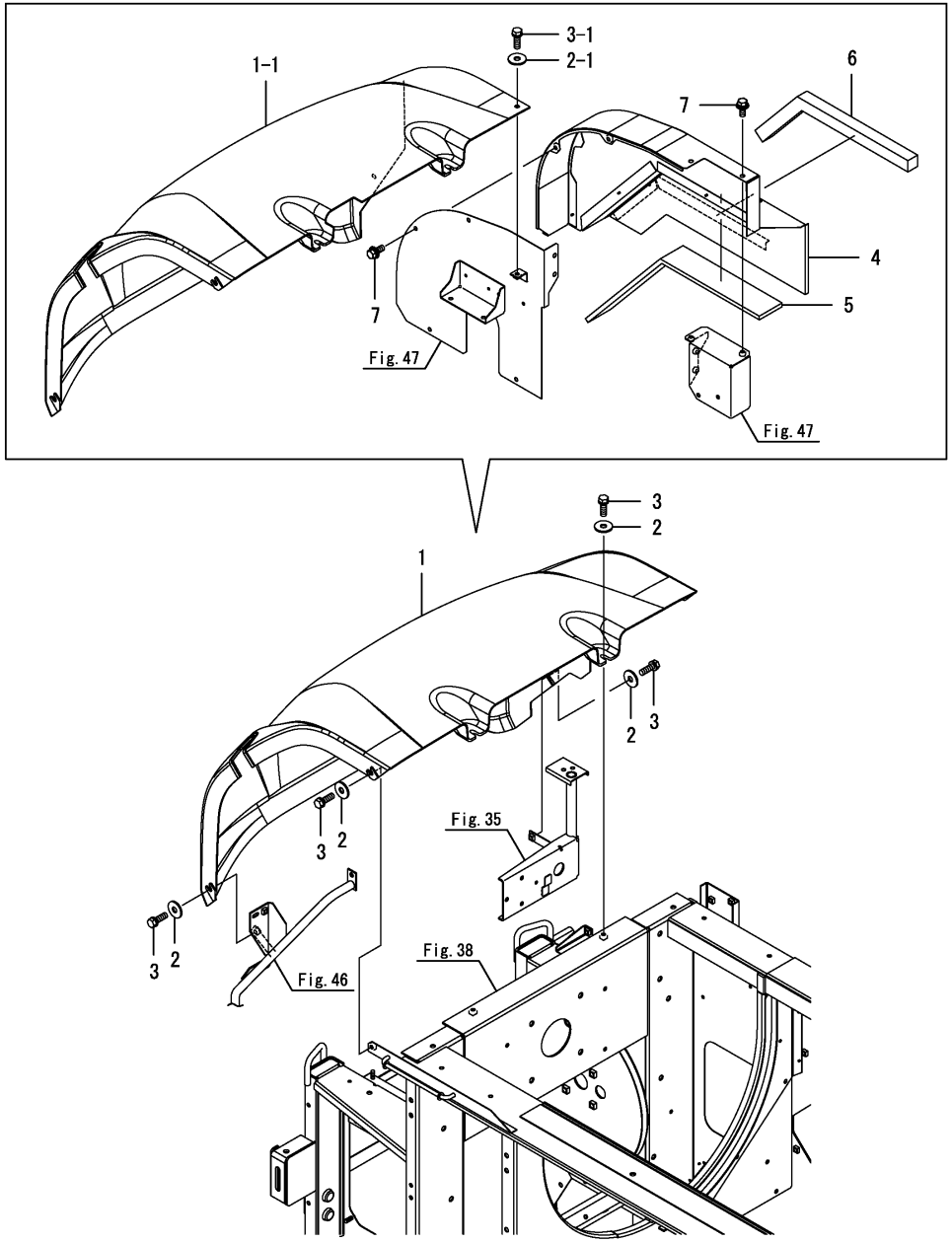

No.	Lev.	Parts No.	Description	Q'ty (A)	(B)	(C)	(D)	(E)	(F)	I	R
1	1	1E6C80-34200	COVER,FRONT	1							
1-1	1	1E6D10-34200	COVER, FRONT	1						S	
	(A=F800206)										
1-2	1	1E6D10-34201	COVER, FRONT	1						N	
	(A=*2018.10)										
2	1	22157-080000	WASHER, 8	5							
2-1	1	22157-080000	WASHER, 8	6						K	
	(A=F800206)										
3	1	26013-080252	BOLT, M8X 25	5							
3-1	1	26013-080252	BOLT, M8X 25	6						K	
	(A=F800206)										
4	1	1E6C43-65400	COVER, K CLUTCH	1						W	
	(A=F800206)										
5	1	1E6C80-65431	SPONGE,K CLUTCH A	1						W	
	(A=F800206)										
6	1	1E6C43-65450	SPONGE,K CLUTCH C	1						W	
	(A=F800206)										
7	1	26014-080202	BOLT, M8X 20	4						W	
	(A=F800206)										

N:Old $\xleftarrow[\text{No}]{\text{Yes}}$ New, Q:Old $\xleftarrow[\text{Yes}]{\text{No}}$ New, R:Old $\xleftarrow[\text{Yes}]{\text{Yes}}$ New, S:Old $\xleftarrow[\text{No}]{\text{No}}$ New, W:Add, Z:Discontinued, F:Interchangeable by set, K:Q'ty Change

Copyright (C) 2018 YANMAR CO., LTD. All RightsReserved.

Fig.49. REAR COVER

(A)=AW70GV,RSX(F)-IN (D)=
(B)= (E)=
(C)= (F)=

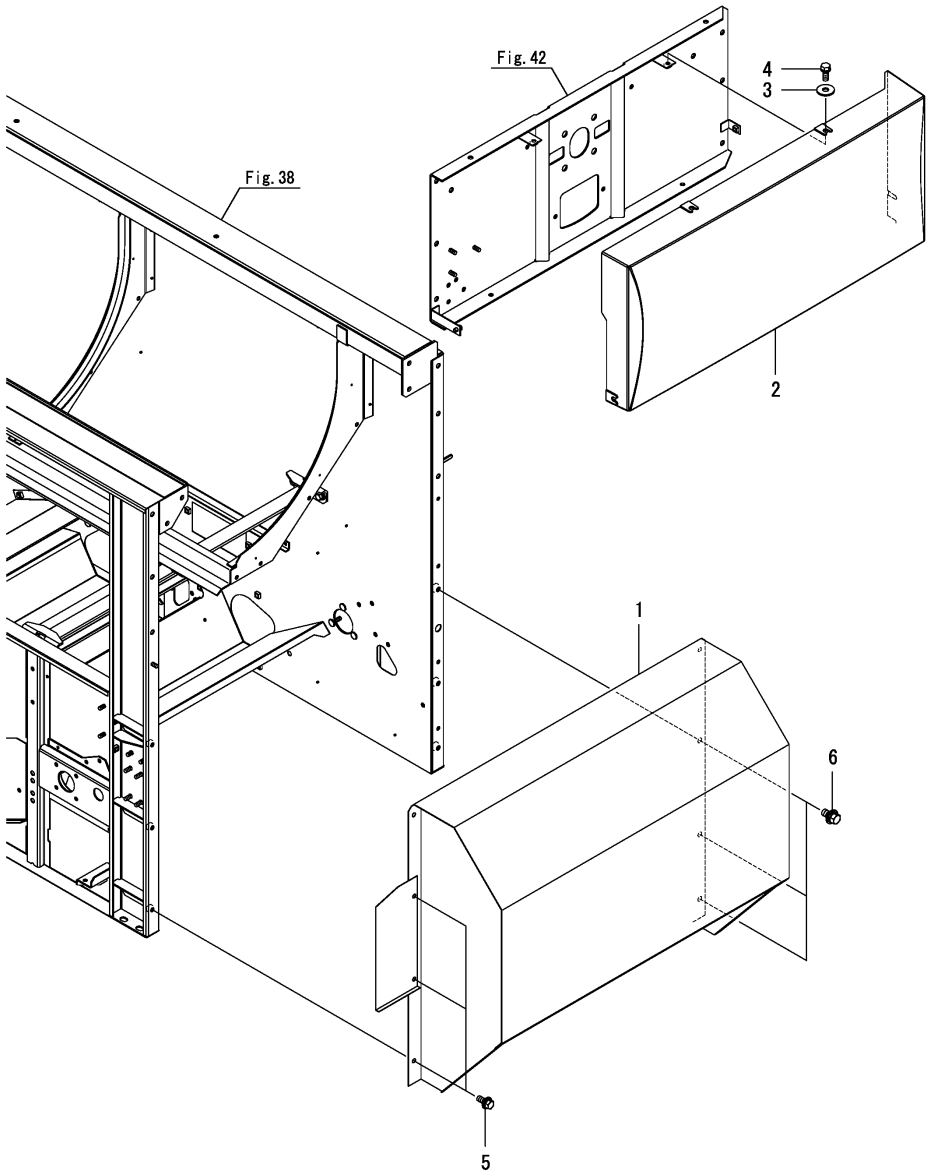

No.	Lev.	Parts No.	Description	Q'ty (A)	(B)	(C)	(D)	(E)	(F)	I	R
1	1	1E6C80-34400	COVER, REAR LOWER	1							
2	1	1E6C80-34450	COVER, REAR UPPER	1							
3	1	22157-080000	WASHER, 8	3							
4	1	26013-080202	BOLT, M8X 20	3							
5	1	26014-080202	BOLT, M8X 20	3							
6	1	26014-100202	BOLT, M10X 20	3							

N:Old $\xleftrightarrow[\text{No}]{\text{Yes}}$ New, Q:Old $\xleftrightarrow[\text{Yes}]{\text{No}}$ New, R:Old $\xleftrightarrow[\text{Yes}]{\text{Yes}}$ New, S:Old $\xleftrightarrow[\text{No}]{\text{No}}$ New, W:Add, Z:Discontinued, F:Interchangeable by set, K:Q'ty Change

Copyright (C) 2018 YANMAR CO., LTD. All RightsReserved.

Fig.50. DRIVE CASE

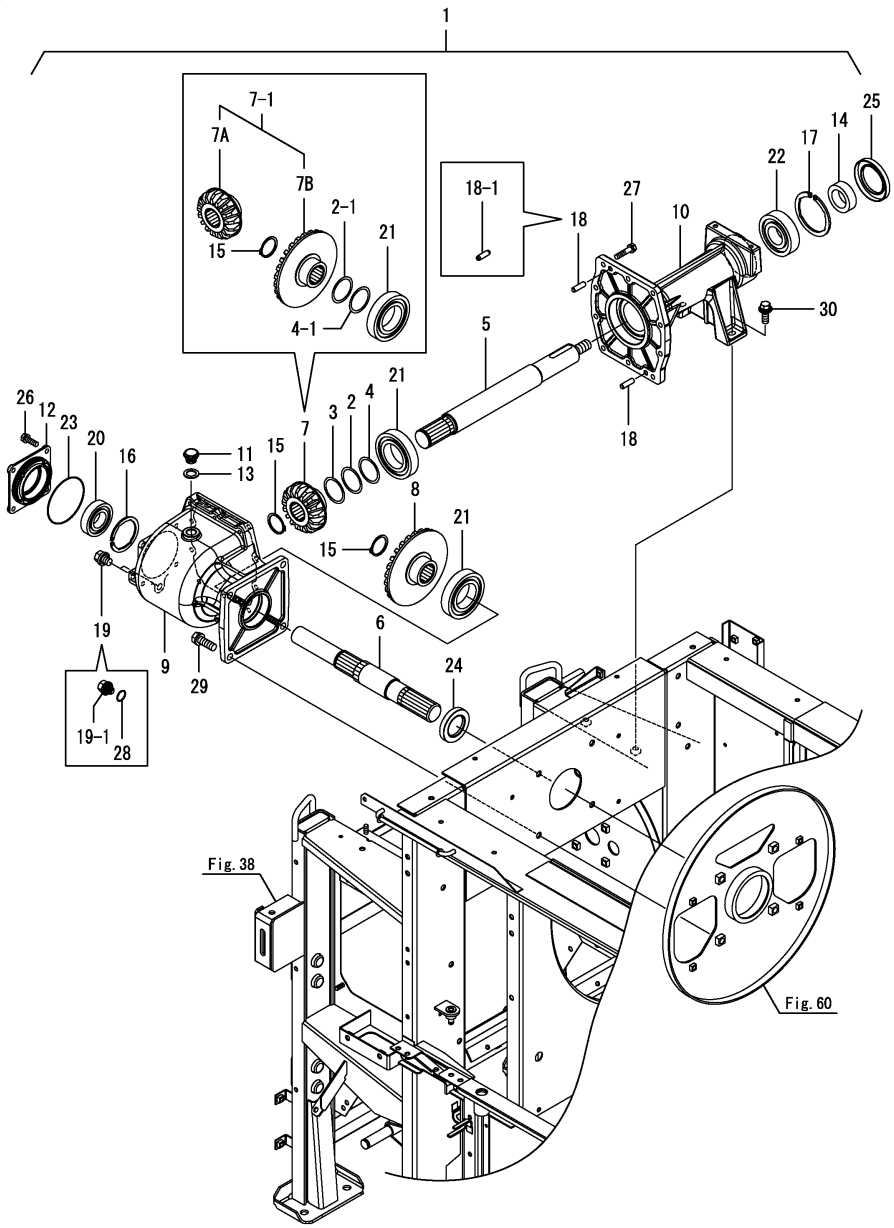

Remarks
(1)No.19-1, 28 interchangeable by set.
(2)No.9-1, 18-1 interchangeable by set.

(A)=AW70GV,RSX(F)-IN (D)=
(B)= (E)=
(C)= (F)=

No.	Lev.	Parts No.	Description	Q'ty (A)	(B)	(C)	(D)	(E)	(F)	I	R
1	1	7E6C80-35000	CASE ASSY, DRIVE	1							
2	2	1E6C80-35020	SHIM, 0.1	1							
2-1	2	1E6C80-35020	SHIM, 0.1	2						K	
	(A=F800105)										
3	2	1E6C80-35030	SHIM, 0.15	1							
4	2	1E6C80-35040	SHIM, 0.2	1							
4-1	2	1E6C80-35040	SHIM, 0.2	2						K	
	(A=F800105)										
5	2	1E6C80-35050	SHAFT,DRUM 1ST	1							
6	2	1E6C80-35060	SHAFT,DRUM 2ND	1							
7	2	1E6C80-35080	GEAR,BEVEL 17	1							
7-1	2	1E6C80-35070	GEAR ASSY, BEVEL	1						S	
	(A=F800105)										
7A	3	1E6C80-35081	GEAR,BEVEL 17	1						W	
	(A=F800105)										
7B	3	1E6C80-35091	GEAR,BEVEL 27	1						W	
	(A=F800105)										
8	2	1E6C80-35090	GEAR,BEVEL 27	1						Z	
	(A=F800105)										
9	2	1E6C80-35102	CASE, DRIVE A	1							
9-1	2	1E6C80-35103	CASE, DRIVE A	1						F	2
	(A=F800063)										
10	2	1E6C80-35111	CASE, DRIVE B	1							
10-1	2	1E6C80-35112	CASE, DRIVE B	1						N	
	(A=F800063)										
11	2	1E6B30-35120	PLUG, OIL	1							
12	2	1E6C80-35120	CASE, BEARING	1							
13	2	1E6B30-35130	PACKING, PLUG 20	1							
14	2	1E6C80-35130	SLEEVE, 40X60X19	1							
15	2	22242-000400	RING, 40	2							
16	2	22252-000721	RING, 72	1							
17	2	22252-000901	RING, 90	1							
18	2	22312-080250	PIN, PARALLEL M8X25	2							
18-1	2	1E8559-11060	PIN, PARALLEL 8X28	2						F	2
	(A=F800063)										
19	2	23490-120002	PLUG, 12	2							
19-1	2	1E6C80-35350	PLUG, M12	2						F	1
	(A=F800063)										
20	2	24104-062074	BEARING, BALL 6207UU	1							
21	2	24104-062114	BEARING, BALL 6211UU	2							
22	2	24104-063084	BEARING, BALL 6308UU	1							
23	2	24321-000950	O-RING, 1AG95.0	1							
24	2	24421-457212	SEAL, OIL TC457212	1							
25	2	24421-609011	SEAL, TC609011	1							
26	2	26013-080252	BOLT, M8X 25	4							
27	2	26013-080352	BOLT, M8X 35	10							
28	2	24311-000140	O-RING, 1AP14.0	2						W	1
	(A=F800063)										
29	1	26013-120352	BOLT, M12X 35	4							
30	1	26014-100302	BOLT, M10X 30	2							

N:Old $\xleftarrow[\text{No}]{\text{Yes}}$ New, Q:Old $\xleftarrow[\text{Yes}]{\text{No}}$ New, R:Old $\xleftarrow[\text{Yes}]{\text{Yes}}$ New, S:Old $\xleftarrow[\text{No}]{\text{No}}$ New, W:Add, Z:Discontinued, F:Interchangeable by set, K:Q'ty Change

Copyright (C) 2018 YANMAR CO., LTD. All RightsReserved.

Fig.51. INPUT SHAFT

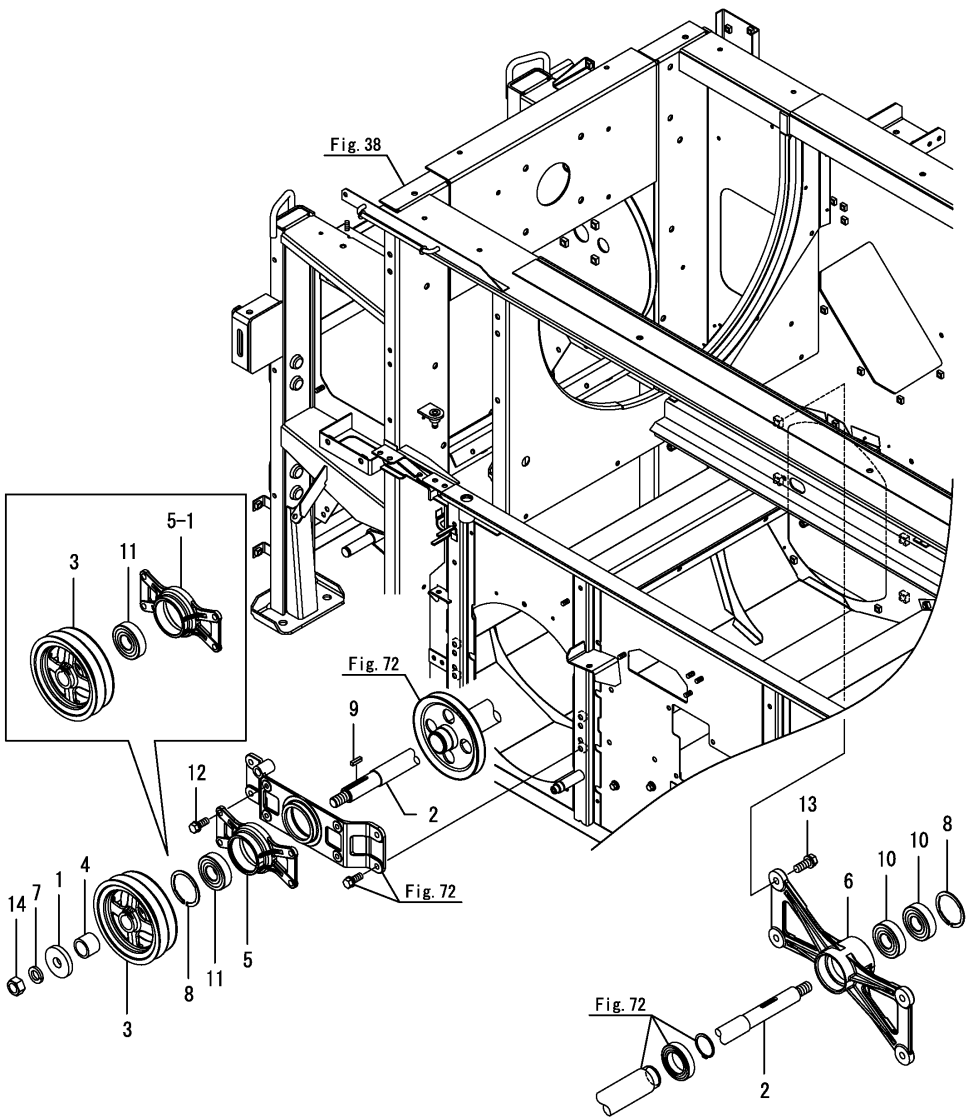

(A)=AW70GV,RSX(F)-IN (D)=
(B)= (E)=
(C)= (F)=

No.	Lev.	Parts No.	Description	Q'ty (A)	(B)	(C)	(D)	(E)	(F)	I	R
1	1	1E6B30-35100	COLLAR, 21X64X10	1							
2	1	1E6C80-35211	SHAFT, INPUT	1							
2-1	1	1E6C80-35212	SHAFT, INPUT	1						N	
	(A=F800063)										
3	1	1E6C80-35220	V-PULLEY, 170C-178C	1							
4	1	1E6C80-36030	COLLAR, 30.5X40X30	1							
5	1	1E6C80-44320	METAL, WINNOWER LB	1							
5-1	1	1E6C80-44321	METAL, WINNOWER LB	1						S	
	(A=F800105)										
6	1	1E6C80-44350	METAL, WINNOWER R	1							
7	1	22217-200000	WASHER, SPRING 20	1							
8	1	22252-000721	RING, 72	2						Z	
	(A=F800105)										
9	1	22550-070250	KEY 7X25	1							
10	1	24104-063064	BEARING, BALL 6306UU	2							
11	1	24104-063064	BEARING, BALL 6306UU	1							
12	1	26013-100252	BOLT, M10X 25	4							
13	1	26013-120302	BOLT, M12X 30	4							
14	1	26737-200002	NUT, M20	1							

N:Old $\xleftarrow[\text{No}]{\text{Yes}}$ New, Q:Old $\xleftarrow[\text{Yes}]{\text{No}}$ New, R:Old $\xleftarrow[\text{Yes}]{\text{Yes}}$ New, S:Old $\xleftarrow[\text{No}]{\text{No}}$ New, W:Add, Z:Discontinued, F:Interchangeable by set, K:Q'ty Change

Copyright (C) 2018 YANMAR CO., LTD. All RightsReserved.

Fig.52. BELT(1ST & 2ND)

(A)=AW70GV,RSX(F)-IN (D)=
(B)= (E)=
(C)= (F)=

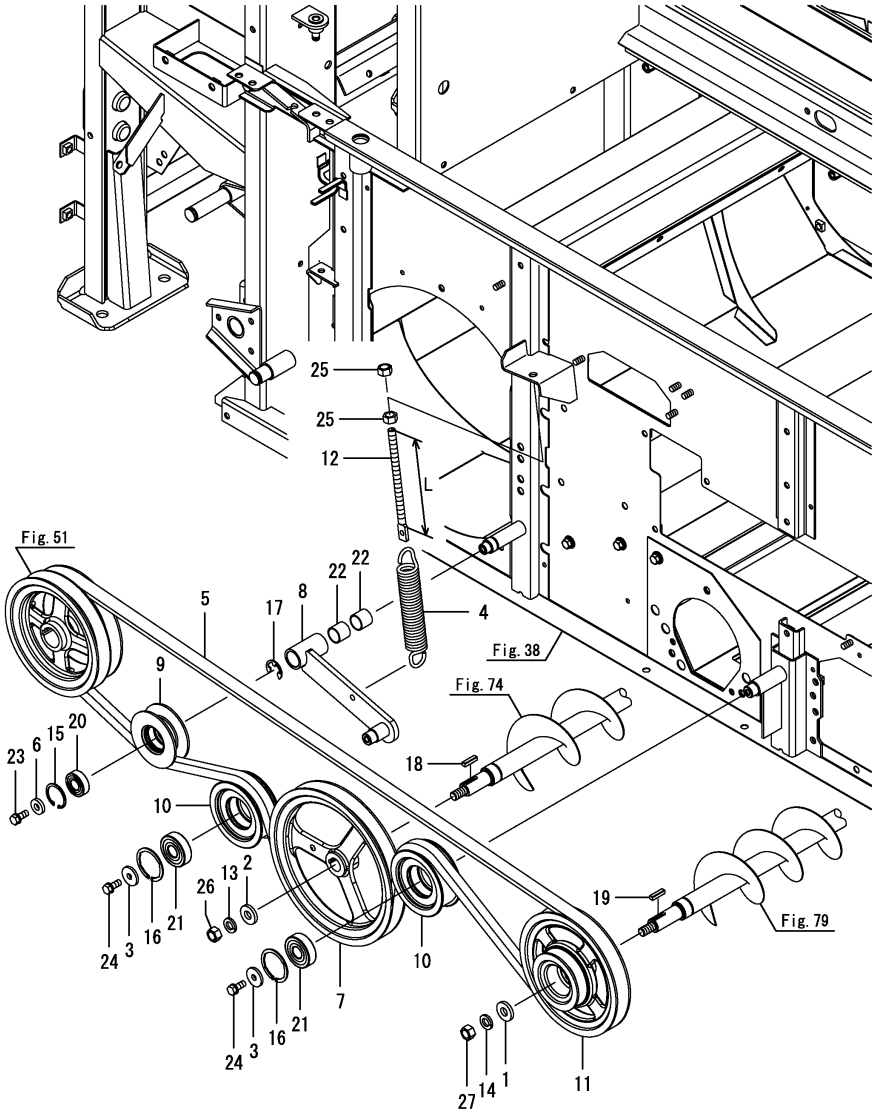

No.	Lev.	Parts No.	Description	Q'ty (A)	(B)	(C)	(D)	(E)	(F)	I	R
1	1	1E8559-12500	WASHER, 12X28X4.5	1							
2	1	1E8559-12500	WASHER, 12X28X4.5	1							
3	1	1E8559-22220	WASHER, 8.5X28X3.2	2							
4	1	1E6B30-35230	SPRING, 25X176	1							
5	1	1E6B30-35290	V-BELT, LC109-AG6	1							
6	1	1E8559-35290	COLLAR, 9.5X22X4.5	1							
7	1	1E6C80-35300	V-PULLEY, 236 C1	1							
8	1	1E6C80-35310	ARM, TENSION 170	1							
9	1	1E8559-35310-1	PULLEY, TENSION 85C	1							
10	1	1E6B30-35350	ROLLER, TENSION 90	2							
11	1	1E6C80-35400	V-PULLEY, 186C-86B	1							
12	1	1E6B30-35620	BOLT, TENSION 10X163	1							
12-1	1	1E8559-51660-2	SCREW,TENSION 10X123	1						S	1
	(A=F800033)										
13	1	22217-120000	WASHER, SPRING 12	1							
14	1	22217-120000	WASHER, SPRING 12	1							
15	1	22252-000350	RING, 35	1							
16	1	22252-000471	RING, 47	2							
17	1	22272-000150	RING, E-15	1							
18	1	22551-050200	KEY, 5X 20	1							
19	1	22551-050200	KEY, 5X 20	1							
20	1	24104-062024	BEARING, BALL 6202UU	1							
21	1	24104-063034	BEARING, BALL 6303UU	2							
22	1	24550-020200	BUSH, 20X20	2							
23	1	26013-080202	BOLT, M8X 20	1							
24	1	26013-080202	BOLT, M8X 20	2							
25	1	26717-100002	NUT, M10	2							
26	1	26737-120002	NUT, M12	1							
27	1	26737-120002	NUT, M12	1							

Remarks
(1)L=No.12 : 150mm, No.12-1 : 110mm.

N:Old $\frac{\text{Yes}}{\text{No}}$ New, Q:Old $\frac{\text{No}}{\text{Yes}}$ New, R:Old $\frac{\text{Yes}}{\text{Yes}}$ New, S:Old $\frac{\text{No}}{\text{No}}$ New, W:Add, Z:Discontinued, F:Interchangeable by set, K:Q'ty Change

Copyright (C) 2018 YANMAR CO., LTD. All RightsReserved.

Fig.53. SWING BELT

(A)=AW70GV,RSX(F)-IN (D)=
(B)= (E)=
(C)= (F)=

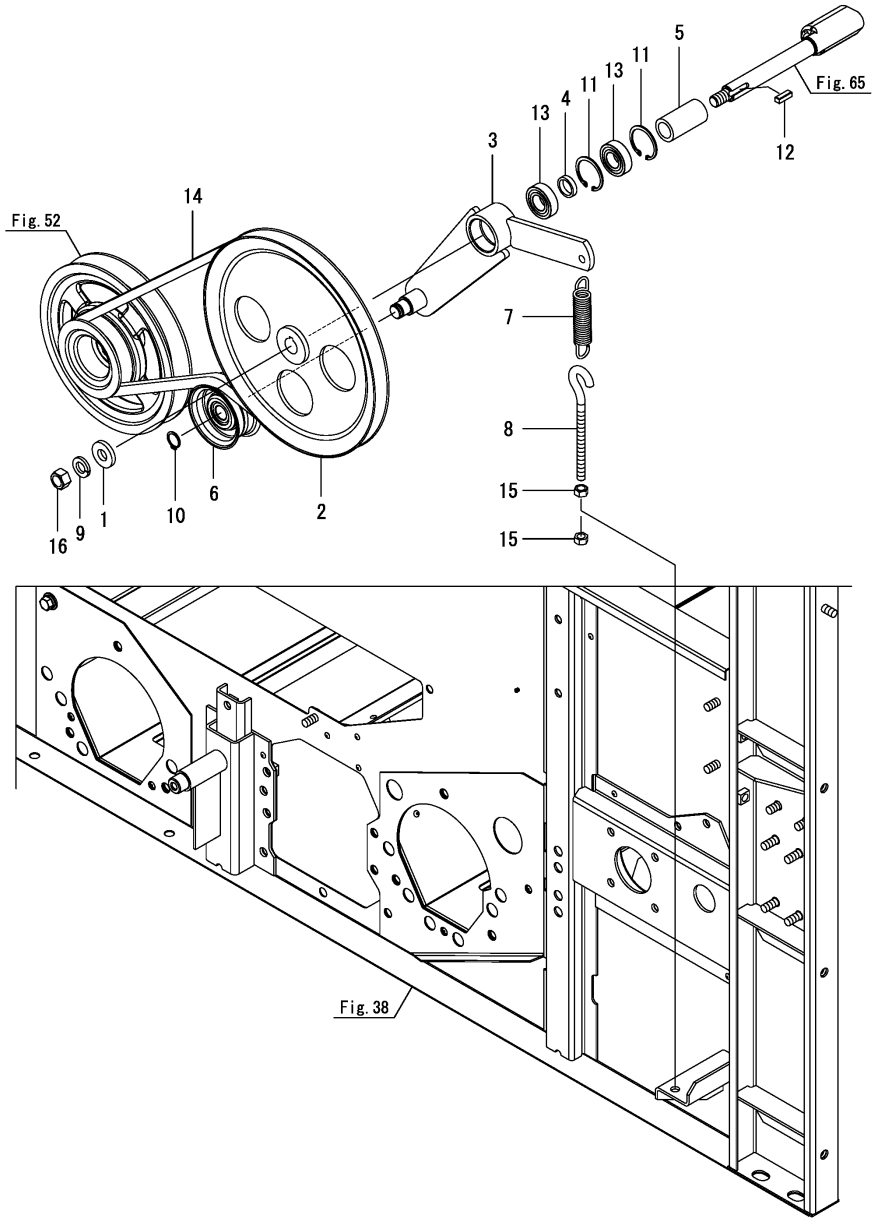

No.	Lev.	Parts No.	Description	Q'ty (A)	(B)	(C)	(D)	(E)	(F)	I	R
1	1	1E8559-12500	WASHER, 12X28X4.5	1							
2	1	1E6B30-35411	V-PULLEY, 240 B1	1							
3	1	1E6B30-35451	ARM, TENTION 167	1							
4	1	1E6B30-35720	COLLAR, 17.2X22X5	1							
5	1	1E6C80-35740	COLLAR, 17.2X25X48	1							
6	1	1E6B30-35760	ROLLER, TENSION 60	1							
7	1	1E6B30-35780	SPRING, 2.6X15X92	1							
8	1	1E6B30-35800	ROD, TENSION	1							
9	1	22217-120000	WASHER, SPRING 12	1							
10	1	22242-000150	RING, 15	1							
11	1	22252-000350	RING, 35	2							
12	1	22551-050150	KEY, 5X 15	1							
13	1	24104-060034	BEARING, BALL 6003UU	2							
14	1	25123-004602	V-BELT, B46H	1							
15	1	26717-080002	NUT, M8	2							
16	1	26737-120002	NUT, M12	1							

N:Old $\xleftarrow[\text{No}]{\text{Yes}}$ New, Q:Old $\xleftarrow[\text{Yes}]{\text{No}}$ New, R:Old $\xleftarrow[\text{Yes}]{\text{Yes}}$ New, S:Old $\xleftarrow[\text{No}]{\text{No}}$ New, W:Add, Z:Discontinued, F:Interchangeable by set, K:Q'ty Change

Copyright (C) 2018 YANMAR CO., LTD. All RightsReserved.

Fig.54. ROTOR DRIVE BELT

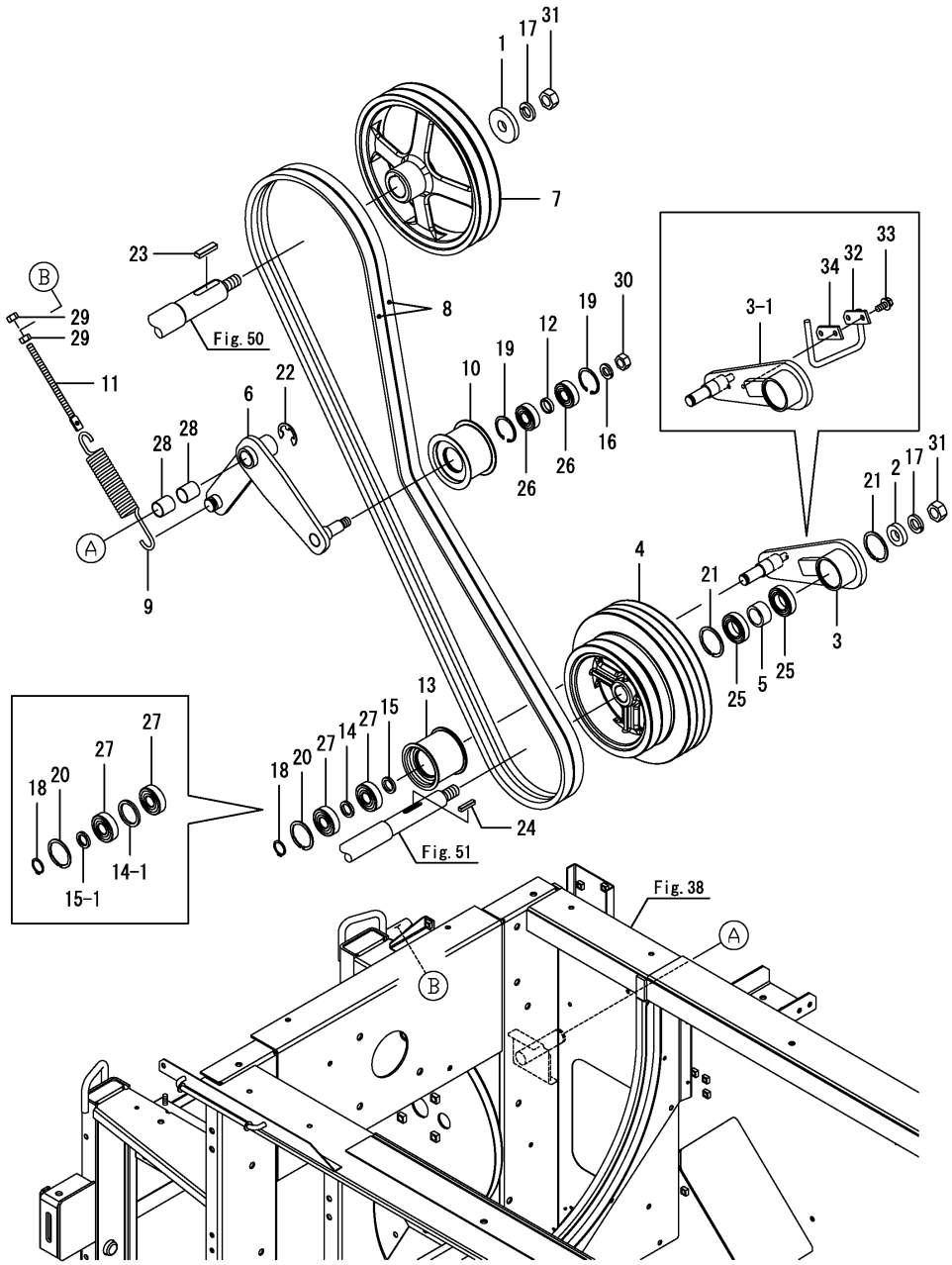

(A)=AW70GV,RSX(F)-IN (D)=
(B)= (E)=
(C)= (F)=

No.	Lev.	Parts No.	Description	Q'ty (A)	(B)	(C)	(D)	(E)	(F)	I	R
1	1	1E6B30-35100	COLLAR, 21X64X10	1							
2	1	1E6C80-35140	COLLAR, 21X40X10	1							
3	1	1E6C80-35151	ARM,THRESHING CLUTCH	1							
3-1	1	1E6C80-35152	ARM,THRESHING CLUTCH	1						N	
	(A=F800049)										
3-2	1	1E6C80-35153	ARM,THRESHING CLUTCH	1						N	
	(A=F800105)										
4	1	1E6C85-35200	V-PULLEY, 218C-289B	1							
5	1	1E6C80-35230	COLLAR, 30.5X40X20	1							
6	1	1E6C80-35250	ARM, TENSION 190	1							
7	1	1E6C80-35500	V-PULLEY, 310 C2	1							
8	1	1E6C80-35510	V-BELT, LC109-AG8	2							
9	1	1E6B30-35580	SPRING, 30X230	1							
10	1	1E6B30-35600	ROLLER,TENSION 90X58	1							
11	1	1E6B30-35620	BOLT, TENSION 10X163	1							
11-1	1	1E9063-51661	SCREW,TENSION 10X143	1						R	
	(A=F800105)										
12	1	1E6B30-35640	COLLAR, 21.6X27.2X6	1							
13	1	1E6C80-35330	ROLLER,TENSION 80	1							
14	1	1E8559-73280	COLLAR, 21X30X4	1							
14-1	1	1E6C80-35360	COLLAR, 40X50X4	1						N	
	(A=F800049)										
15	1	1E8559-73280	COLLAR, 21X30X4	1							
15-1	1	1E6C80-35380	COLLAR, 20X30X4	1						N	
	(A=F800063)										
16	1	22217-160000	WASHER, SPRING 16	1							
17	1	22217-200000	WASHER, SPRING 20	2							
18	1	22242-000200	RING, 20	1							
19	1	22252-000470	RING, 47	2							
20	1	22252-000521	RING, 52	1							
21	1	22252-000551	RING, 55	2							
22	1	22272-000190	RING, E-19	1							
23	1	22550-120450	KEY, 12 X 45	1							
24	1	22551-070350	KEY, 7X 35	1							
25	1	24104-060064	BEARING, BALL 6006UU	2							
26	1	24104-062044	BEARING, BALL 6204UU	2							
27	1	24104-063044	BEARING, BALL 6304UU	2							
28	1	24550-025300	BUSH, 25X30	2							
29	1	26717-100002	NUT, M10	2							
30	1	26737-160002	NUT, M16	1							
31	1	26737-200002	NUT, M20	2							
32	1	1E6C80-35450	GUIDE ASSY, BAR	1						W	
	(A=F800049)										
33	1	26014-080252	BOLT, M8X 25	2						W	
	(A=F800049)										
34	1	1E6C80-35470	PLATE, 64X24	1						W	
	(A=F800049)										

N:Old $\overset{\text{Yes}}{\underset{\text{No}}{\leftrightarrows}}$ New, Q:Old $\overset{\text{No}}{\underset{\text{Yes}}{\leftrightarrows}}$ New, R:Old $\overset{\text{Yes}}{\underset{\text{Yes}}{\leftrightarrows}}$ New, S:Old $\overset{\text{No}}{\underset{\text{No}}{\leftrightarrows}}$ New, W:Add, Z:Discontinued, F:Interchangeable by set, K:Q'ty Change

Copyright (C) 2018 YANMAR CO., LTD. All RightsReserved.

Fig.55. COUNTER BELT

(A)=AW70GV,RSX(F)-IN (D)=
(B)= (E)=
(C)= (F)=

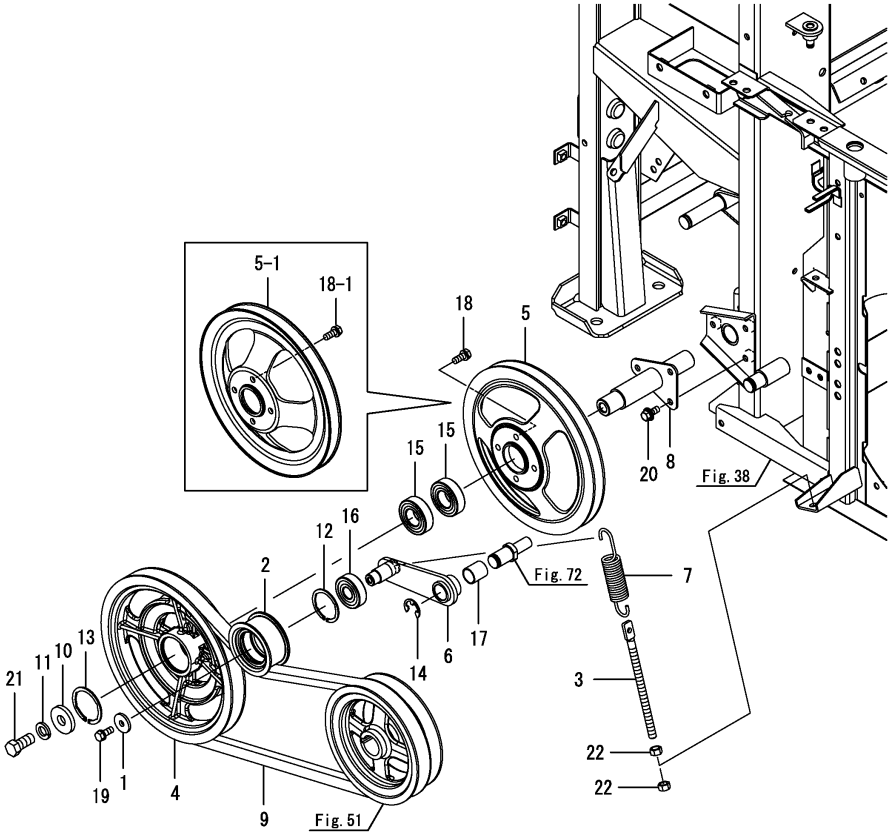

No.	Lev.	Parts No.	Description	Q'ty (A)	(B)	(C)	(D)	(E)	(F)	I	R
1	1	1E8559-22220	WASHER, 8.5X28X3.2	1							
2	1	1E8559-35161	PULLEY, TENSION 70	1							
3	1	1E6B30-35620	BOLT, TENSION 10X163	1							
4	1	1E6C80-36000	V-PULLEY,157C1-252C1	1							
4-1	1	1E6C80-36001	V-PULLEY,157C1-252C1	1						N	
	(A=F800049)										
5	1	1E6C80-36010	V-PULLEY, 252 B1	1							
5-1	1	1E6C80-36040	V-PULLEY, 252 B1	1						F	1
	(A=F800063)										
6	1	1E6C80-36100	ARM,COUNTER	1							
7	1	1E6C80-36140	SPRING,25X127	1							
8	1	1E6C80-36150	SHAFT, COUNTER	1							
9	1	1E6C80-36180	V-BELT, LC58-AG8	1							
10	1	1E9060-51720	WASHER, 15X40X6	1							
11	1	22217-140000	WASHER, SPRING 14	1							
12	1	22252-000471	RING, 47	1							
13	1	22252-000521	RING, 52	1							
14	1	22272-000150	RING, E-15	1							
15	1	24104-062054	BEARING, BALL 6205UU	2							
16	1	24104-063034	BEARING, BALL 6303UU	1							
17	1	24550-020250	BUSH, 20X25	1							
18	1	26013-080202	BOLT, M8X 20	4							
18-1	1	26013-080162	BOLT, M8X 16	4						F	1
	(A=F800063)										
19	1	26013-080202	BOLT, M8X 20	1							
20	1	26014-080202	BOLT, M8X 20	3							
21	1	26156-140302	BOLT, M14X 30 PLATED	1							
22	1	26717-100002	NUT, M10	2							

Remarks
(1)No.5-1, 18-1 interchangeable by set.

N:Old $\xleftarrow[\text{No}]{\text{Yes}}$ New, Q:Old $\xleftarrow[\text{Yes}]{\text{No}}$ New, R:Old $\xleftarrow[\text{Yes}]{\text{Yes}}$ New, S:Old $\xleftarrow[\text{No}]{\text{No}}$ New, W:Add, Z:Discontinued, F:Interchangeable by set, K:Q'ty Change

Copyright (C) 2018 YANMAR CO., LTD. All RightsReserved.

Fig.56. FRONT ROTOR BELT

(A)=AW70GV,RSX(F)-IN (D)=
(B)= (E)=
(C)= (F)=

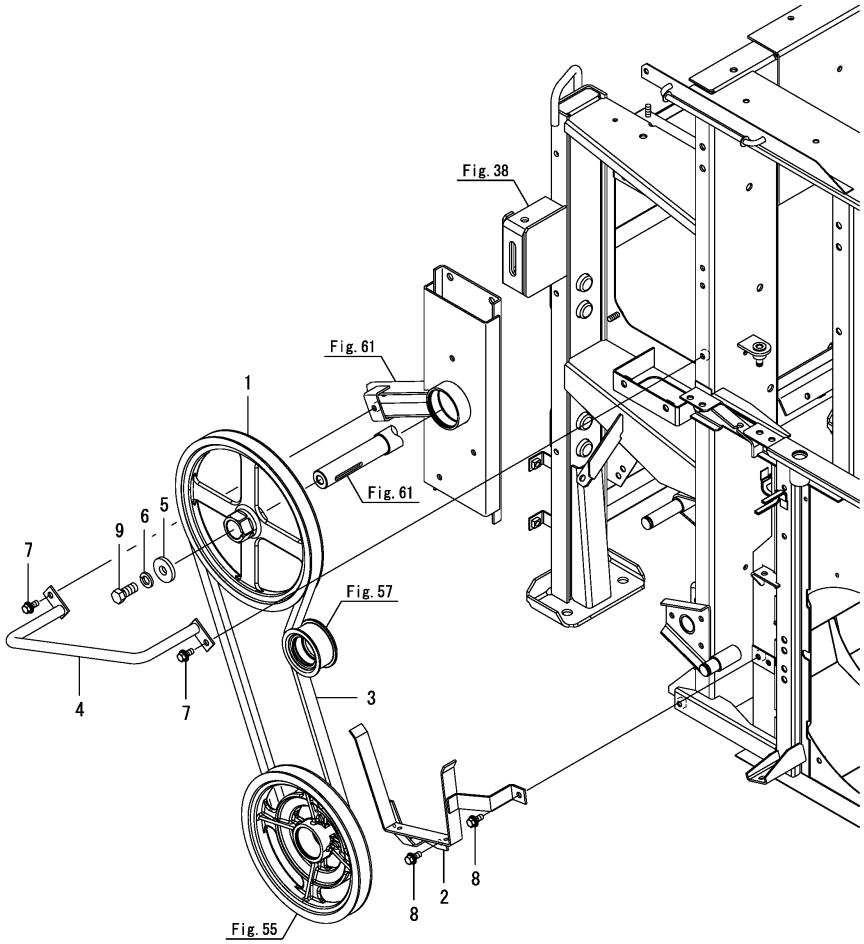

No.	Lev.	Parts No.	Description	Q'ty (A)	(B)	(C)	(D)	(E)	(F)	I	R
1	1	1E6C80-36020	V-PULLEY, 290 C1	1							
2	1	1E6C80-36250	RETAINER, K BELT D.	1							
3	1	1E6C80-36370	V-BELT, LC70-AG8	1							
4	1	1E6C80-36400	RETAINER, K BELT U	1							
4-1	1	1E6C80-36400-1	RETAINER, K BELT U	1						S	1
	(A=*2018.08)										
5	1	1E9060-51720	WASHER, 15X40X6	1							
6	1	22217-140000	WASHER, SPRING 14	1							
7	1	26014-080202	BOLT, M8X 20	2							
8	1	26014-080202	BOLT, M8X 20	2							
9	1	26156-140302	BOLT, M14X 30 PLATED	1							

Remarks
(1)Painting color=No.4 : YANMAR NAVY GRAY, No.4-1 : CATION E-COATING BLACK.

N:Old $\xleftrightarrow[\text{No}]{\text{Yes}}$ New, Q:Old $\xleftrightarrow[\text{Yes}]{\text{No}}$ New, R:Old $\xleftrightarrow[\text{Yes}]{\text{Yes}}$ New, S:Old $\xleftrightarrow[\text{No}]{\text{No}}$ New, W:Add, Z:Discontinued, F:Interchangeable by set, K:Q'ty Change

Copyright (C) 2018 YANMAR CO., LTD. All RightsReserved.

Fig.57. FRONT ROTOR BELT

(A)=AW70GV,RSX(F)-IN (D)=
(B)= (E)=
(C)= (F)=

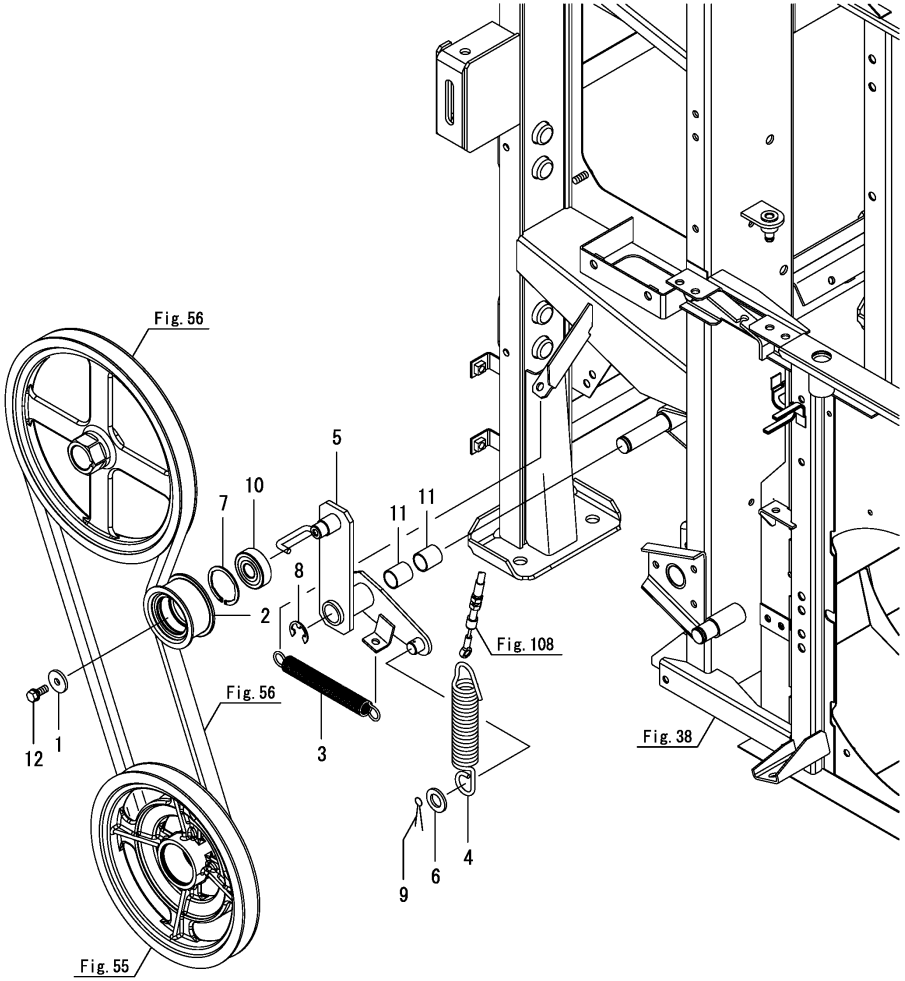

No.	Lev.	Parts No.	Description	Q'ty (A)	(B)	(C)	(D)	(E)	(F)	I	R
1	1	1E8559-22220	WASHER, 8.5X28X3.2	1							
2	1	1E8559-35161	PULLEY, TENSION 70	1							
3	1	1E6B30-36041	SPRING, 17X170	1							
4	1	1E6C80-36240	SPRING,26.2X157	1							
5	1	1E6C80-36301	ARM, TENSION 130	1							
6	1	22137-160000	WASHER, 16	1							
7	1	22252-000471	RING, 47	1							
8	1	22272-000150	RING, E-15	1							
9	1	22417-250250	PIN, COTTER 2.5X25	1							
10	1	24104-063034	BEARING, BALL 6303UU	1							
11	1	24550-020250	BUSH, 20X25	2							
12	1	26013-080202	BOLT, M8X 20	1							

N:Old ◄Yes/No► New, Q:Old ◄No/Yes► New, R:Old ◄Yes/Yes► New, S:Old ◄No/No► New, W:Add, Z:Discontinued, F:Interchangeable by set, K:Q'ty Change

Copyright (C) 2018 YANMAR CO., LTD. All RightsReserved.

Fig.58. REAP DRIVE CHAIN

(A)=AW70GV,RSX(F)-IN (D)=
(B)= (E)=
(C)= (F)=

No.	Lev.	Parts No.	Description	Q'ty (A)	(B)	(C)	(D)	(E)	(F)	I	R
1	1	1E6C80-36550	COVER, CHAIN	1							
1-1	1	1E6C80-36530	COVER, CHAIN	1						F	1
	(A=F800157)										
1-2	1	1E6C80-36530-1	COVER, CHAIN	1						S	2
	(A=*2018.08)										
2	1	1E6C80-36600	SPROCKET, 16T	1							
2-1	1	1E6C80-36500-1	SPROCKET, 16T	1						F	1
	(A=F800157)										
3	1	22551-070500	KEY, 7X 50	1							
4	1	25210-600621	CHAIN, 60 X 62	1							
5	1	26014-080162	BOLT, M8X 16	3							

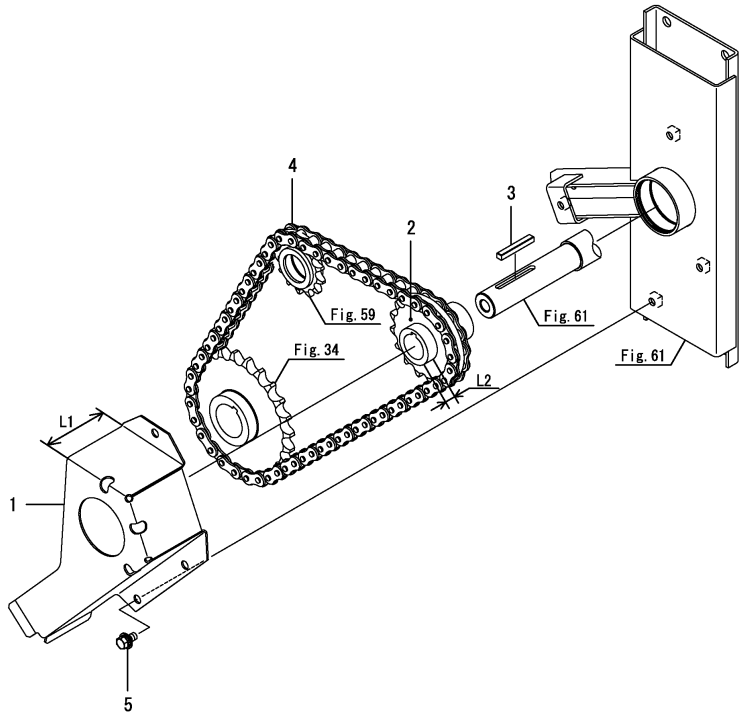

Remarks
(1)No.1-1, 2-1 Fig.34 No.15-1 & Fig.59 No.5-1 interchangeable by set.
L1=No.1 : 86mm, No.1-1 : 84mm.
L2=No.2 : 14.25mm, No.2-1 : 16.25mm.
(2)Painting color=No.1-1 : YANMAR NAVY GRAY, No.1-2 : CATION E-COATING BLACK.

N:Old ◄Yes/No► New, Q:Old ◄No/Yes► New, R:Old ◄Yes/Yes► New, S:Old ◄No/No► New, W:Add, Z:Discontinued, F:Interchangeable by set, K:Q'ty Change

Copyright (C) 2018 YANMAR CO., LTD. All RightsReserved.

Fig.59. REAP DRIVE CHAIN

(A)=AW70GV,RSX(F)-IN (D)=
(B)= (E)=
(C)= (F)=

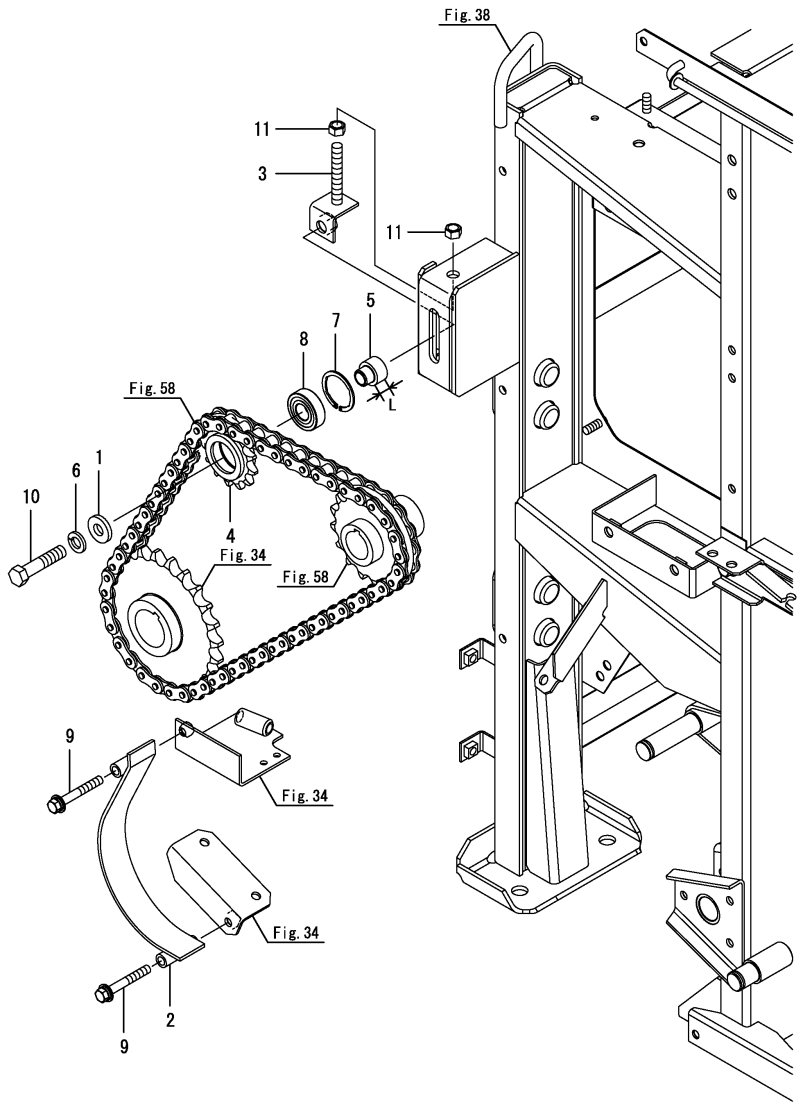

No.	Lev.	Parts No.	Description	Q'ty (A)	(B)	(C)	(D)	(E)	(F)	I	R
1	1	1E8559-12500	WASHER, 12X28X4.5	1							
2	1	1E6C80-36450	COVER ASSY,CHAIN	1							
2-1	1	1E6C80-36450-1	COVER ASSY,CHAIN	1						S	2
	(A=*2018.12)										
3	1	1E6B30-36501	BOLT, ADJUST	1							
4	1	1E6B30-36590	SPROCKET, 12 TENSION	1							
5	1	1E6B30-36610	BUSH, TENSION	1							
5-1	1	1E6C80-36520	BUSH, TENSION	1						F	1
	(A=F800157)										
6	1	22217-120000	WASHER, SPRING 12	1							
7	1	22252-000401	RING, 40	1							
8	1	24104-062034	BEARING, BALL 6203UU	1							
9	1	26014-080602	BOLT, M8X 60	2							
10	1	26116-120552	BOLT, M12X 55 PLATED	1							
11	1	26717-100002	NUT, M10	2							

Remarks
(1)No.5-1, Fig.34 No.15-1, Fig.58 No.1-1 & 2-1 interchangeable by set.
L=No.5 : 13.5mm, No.5-1 : 11.5mm.
(2)Painting color=No.2 : YANMAR NAVY GRAY, No.2-1 : CATION E-COATING BLACK.

N:Old $\frac{\text{Yes}}{\text{No}}$ New, Q:Old $\frac{\text{No}}{\text{Yes}}$ New, R:Old $\frac{\text{Yes}}{\text{Yes}}$ New, S:Old $\frac{\text{No}}{\text{No}}$ New, W:Add, Z:Discontinued, F:Interchangeable by set, K:Q'ty Change

Copyright (C) 2018 YANMAR CO., LTD. All RightsReserved.

Fig.60. THRESH ROTOR

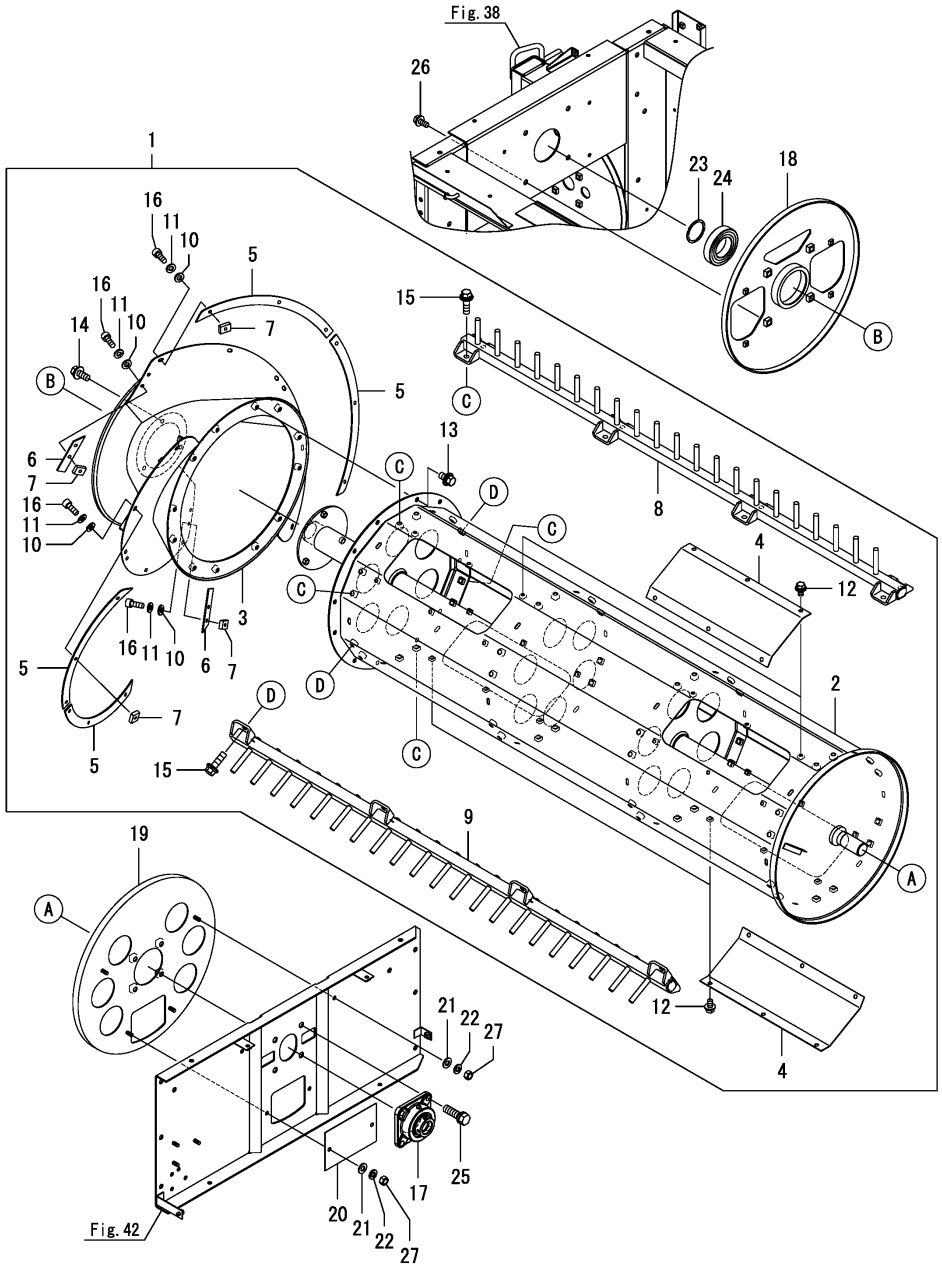

(A)=AW70GV,RSX(F)-IN (D)=
(B)= (E)=
(C)= (F)=

No.	Lev.	Parts No.	Description	Q'ty (A)	(B)	(C)	(D)	(E)	(F)	I	R
1	1	1E6C40-38001	ROTOR ASSY	1							
2	2	1E6C40-38010	DRUM ASSY,ROTOR	1							
3	2	1E6C40-38150	CONE ASSY,ROTOR	1							
4	2	1E6C40-38190	PLATE, ROTOR A	4							
5	2	1E6B30-38220	PLATE, IMPELLER A	4							
6	2	1E6B30-38230	PLATE, IMPELLER B	2							
7	2	1E6B30-38270	NUT, SQUARE M6	16							
8	2	1E6C40-38281	BAR,ROTOR A	4							
9	2	1E6C40-38301	BAR,ROTOR B	2							
10	2	22137-060000	WASHER, 6	16							
11	2	22217-060000	WASHER, SPRING 6	16							
12	2	26014-080162	BOLT, M8X 16	24							
13	2	26014-100202	BOLT, M10X 20	12							
14	2	26014-100252	BOLT, M10X 25	3							
15	2	26014-100352	BOLT 10X35	48							
16	2	26450-060162	BOLT, M6X 16	16							
17	1	1E6B30-38260	BEARING ASSY, 35	1							
18	1	1E6C40-38400	PROTECTOR, FRONT	1							
19	1	1E6C40-38471	PROTECTOR,REAR	1							
20	1	1E6C40-38490	COVER, CLEANING REAR	1							
21	1	22137-080000	WASHER, 8	4							
22	1	22217-080000	WASHER, SPRING 8	4							
23	1	22242-000551	RING, 55	1							
24	1	24104-062114	BEARING, BALL 6211UU	1							
25	1	26013-120402	BOLT, M12X 40	4							
26	1	26014-080202	BOLT, M8X 20	4							
27	1	26717-080002	NUT, M8	4							

N:Old $\frac{\text{Yes}}{\text{No}}$ New, Q:Old $\frac{\text{No}}{\text{Yes}}$ New, R:Old $\frac{\text{Yes}}{\text{Yes}}$ New, S:Old $\frac{\text{No}}{\text{No}}$ New, W:Add, Z:Discontinued, F:Interchangeable by set, K:Q'ty Change

Copyright (C) 2018 YANMAR CO., LTD. All RightsReserved.

Fig.61. FRONT ROTOR

(A)=AW70GV,RSX(F)-IN (D)=
(B)= (E)=
(C)= (F)=

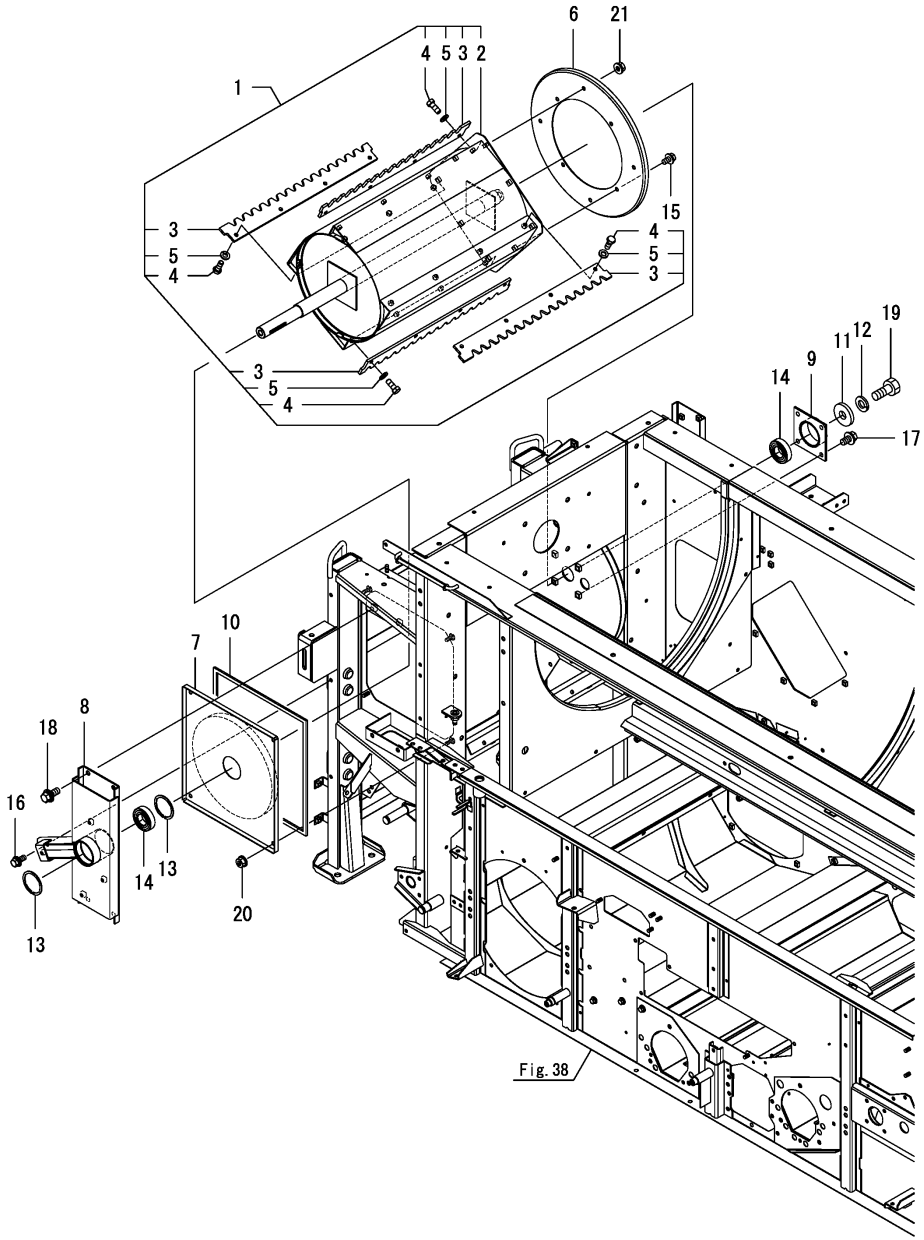

No.	Lev.	Parts No.	Description	Q'ty (A)	(B)	(C)	(D)	(E)	(F)	I	R
1	1	1E6C43-38510	ROTOR,FRONT WP	1							
2	2	1E6C43-38500	ROTOR, FRONT	1							
3	2	1E6B30-38650	BLADE, FRONT ROTOR	4							
4	2	1E8550-85760	BOLT, M8X20 10.9	16							
5	2	22217-080000	WASHER, SPRING 8	16							
6	1	1E6C40-38690-1	PLATE, PROTECTOR R	1							
7	1	1E6B30-38700-1	COVER, FRONT ROTOR	1							
8	1	1E6C80-38730	METAL, FRONT ROTOR	1							
9	1	1E6B30-38790	HOLDER, BEARING	1							
10	1	1E6B30-38830	SEAL, 5X10X135	1							
11	1	1E9060-51720	WASHER, 15X40X6	1							
12	1	22217-140000	WASHER, SPRING 14	1							
13	1	22252-000621	RING, 62	2							
14	1	24104-062064	BEARING, BALL 6206UU	2							
15	1	26014-080162	BOLT, M8X 16	7							
16	1	26014-080202	BOLT, M8X 20	1							
17	1	26014-100202	BOLT, M10X 20	4							
18	1	26014-100252	BOLT, M10X 25	4							
19	1	26156-140302	BOLT, M14X 30 PLATED	1							
20	1	26367-080002	NUT, M8	4							
21	1	26367-080002	NUT, M8	1							

N:Old $\xleftarrow[\text{No}]{\text{Yes}}$ New, Q:Old $\xleftarrow[\text{Yes}]{\text{No}}$ New, R:Old $\xleftarrow[\text{Yes}]{\text{Yes}}$ New, S:Old $\xleftarrow[\text{No}]{\text{No}}$ New, W:Add, Z:Discontinued, F:Interchangeable by set, K:Q'ty Change

Copyright (C) 2018 YANMAR CO., LTD. All RightsReserved.

Fig.62. CONCAVE

(A)=AW70GV,RSX(F)-IN (D)=
(B)= (E)=
(C)= (F)=

No.	Lev.	Parts No.	Description	Q'ty (A)	(B)	(C)	(D)	(E)	(F)	I	R
1	1	1E6B30-39001	CONCAVE ASSY, 14	4							
2	1	26014-080202	BOLT, M8X 20	4							

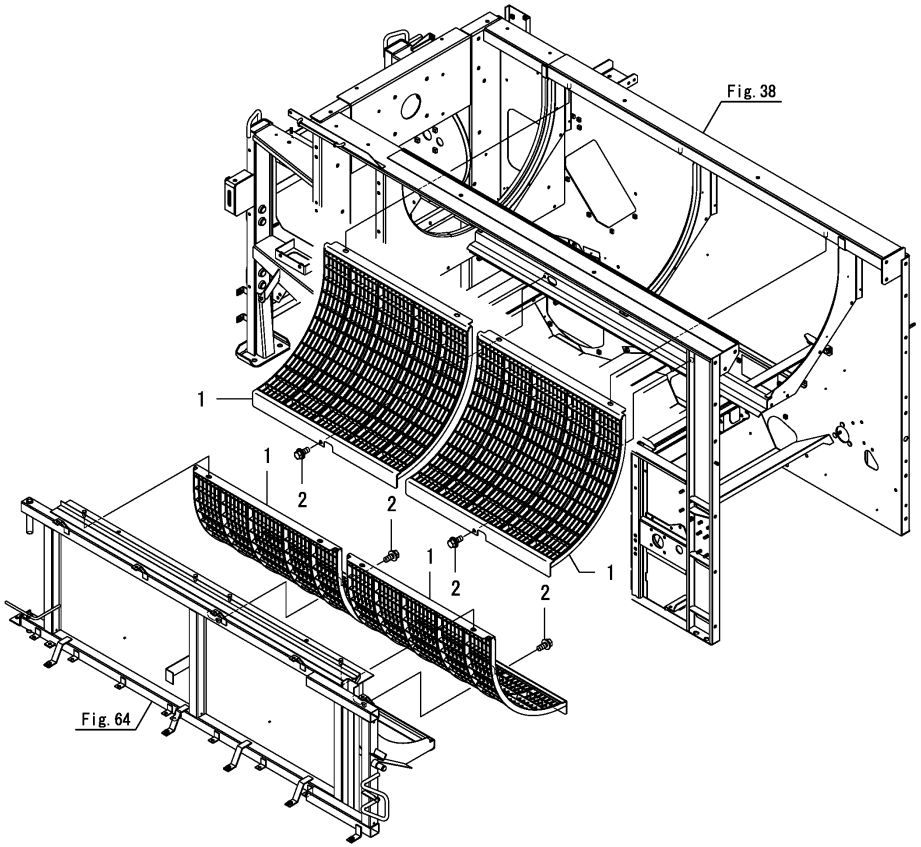

N:Old $\xleftarrow[\text{No}]{\text{Yes}}$ New, Q:Old $\xleftarrow[\text{Yes}]{\text{No}}$ New, R:Old $\xleftarrow[\text{Yes}]{\text{Yes}}$ New, S:Old $\xleftarrow[\text{No}]{\text{No}}$ New, W:Add, Z:Discontinued, F:Interchangeable by set, K:Q'ty Change

Copyright (C) 2018 YANMAR CO., LTD. All RightsReserved.

Fig.63. BODY(UPPER)(INNER)

(A)=AW70GV,RSX(F)-IN (D)=
(B)= (E)=
(C)= (F)=

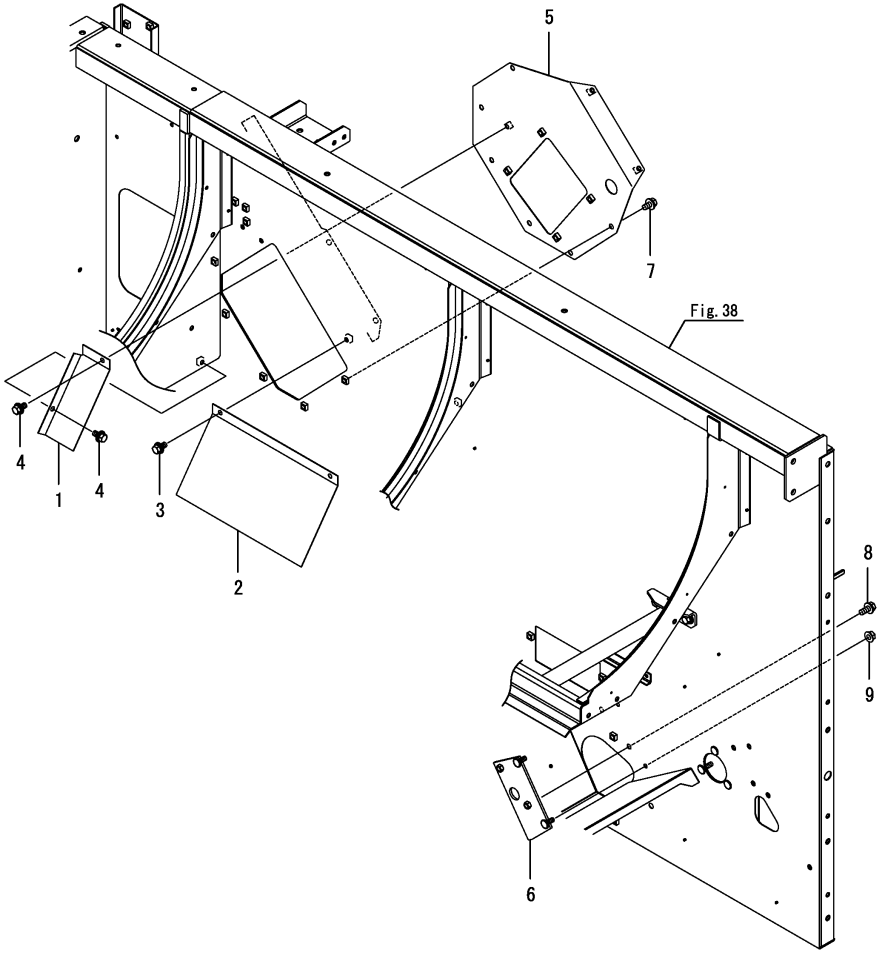

No.	Lev.	Parts No.	Description	Q'ty (A)	(B)	(C)	(D)	(E)	(F)	I	R
1	1	1E6B30-39250-1	PLATE, GUIDE R	1							
2	1	1E6B30-39260-1	PLATE, GUIDE R REAR	1							
3	1	26014-080162	BOLT, M8X 16	2							
4	1	26014-080162	BOLT, M8X 16	2							
5	1	1E6C40-33650	PLATE, PLUG	1						W	
	(A=F800033)										
5-1	1	1E6C40-33650-1	PLATE, PLUG	1						S	1
	(A=*2018.08)										
6	1	1E6C80-46850	PLATE, GUIDE	1						W	
	(A=F800033)										
6-1	1	1E6C80-46900-1	PLATE, BAFFLE 2ND	1						N	
	(A=*2018.09)										
7	1	26014-080162	BOLT, M8X 16	8						W	
	(A=F800033)										
8	1	26014-080202	BOLT, M8X 20	2						W	
	(A=F800033)										
9	1	26367-080002	NUT, M8	2						W	
	(A=F800033)										

Remarks
(1)Painting color=No.5 : YANMAR NAVY GRAY, No.5-1 : CATION E-COATING BLACK.

N:Old $\xleftrightarrow[\text{No}]{\text{Yes}}$ New, Q:Old $\xleftrightarrow[\text{Yes}]{\text{No}}$ New, R:Old $\xleftrightarrow[\text{Yes}]{\text{Yes}}$ New, S:Old $\xleftrightarrow[\text{No}]{\text{No}}$ New, W:Add, Z:Discontinued, F:Interchangeable by set, K:Q'ty Change

Copyright (C) 2018 YANMAR CO., LTD. All RightsReserved.

Fig.64. OPEN FRAME

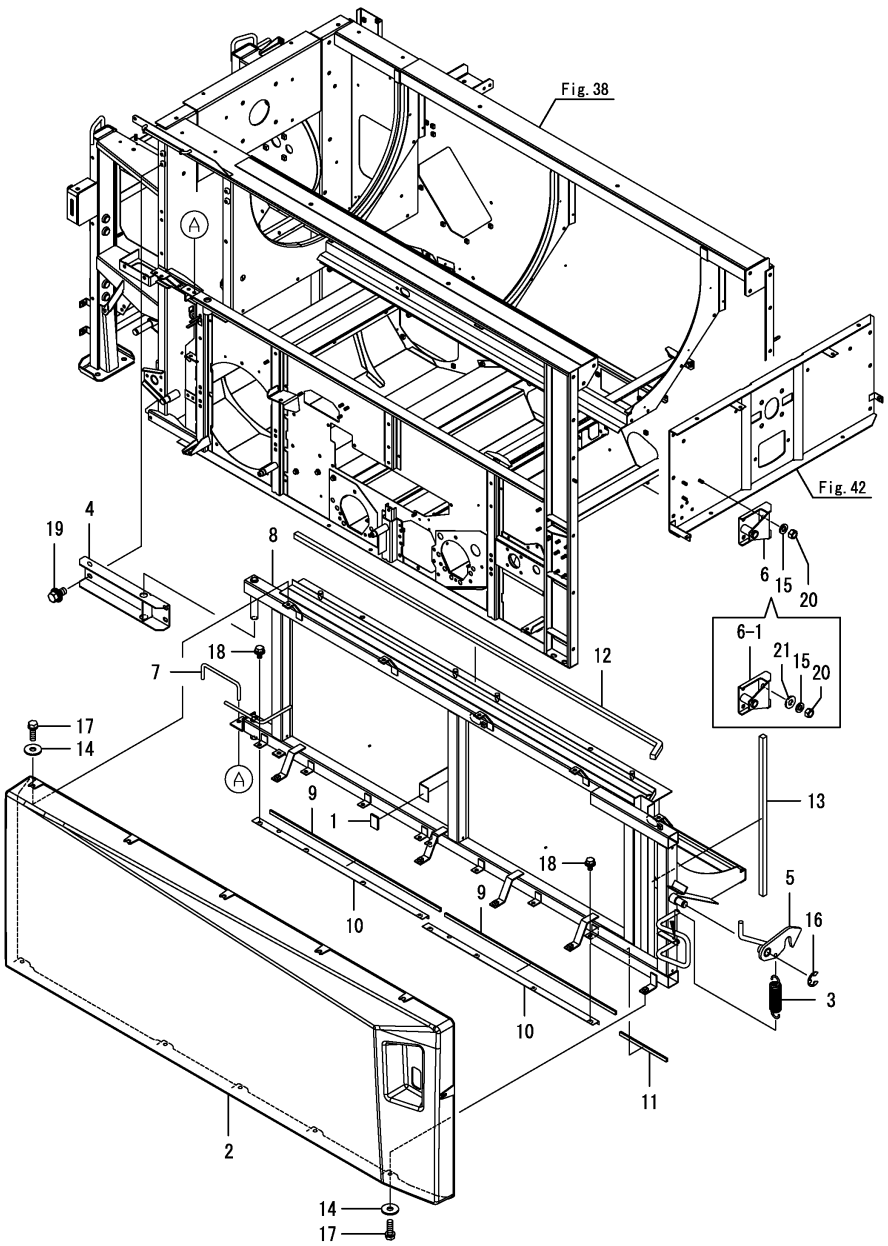

(A)=AW70GV,RSX(F)-IN (D)=
(B)= (E)=
(C)= (F)=

No.	Lev.	Parts No.	Description	Q'ty (A)	(B)	(C)	(D)	(E)	(F)	I	R
1	1	1E6B30-34170	SPONGE, 5X26X40	1							
2	1	1E6C80-34500	COVER, OPEN	1							
3	1	1E8559-35700	SPRING, 2.3X17.3X74	1							
4	1	1E6C40-39300	SUPPORT, FULCRUM	1							
5	1	1E6B30-39351-1	ARM, LOCK	1							
6	1	1E6B30-39430	SHAFT, OPEN LOCK	1							
6-1	1	1E6B30-39431	SHAFT, OPEN LOCK	1						F	1
	(A=F800105)										
7	1	1E6B30-39480	ROD, OPEN LOCK	1							
8	1	1E6C80-39500	FRAME, OPEN	1							
9	1	1E6C40-39600	SEAL, 5X10X660	2							
10	1	1E6C40-39610	SUPPORT, SEAL	2							
11	1	1E6C40-39630	SEAL, 5X10X180	1							
12	1	1E6B30-39980	SEAL, 15X15X1465	1							
13	1	1E6B30-39990	SEAL, 15X15X530	1							
14	1	22157-080000	WASHER, 8	10							
15	1	22217-080000	WASHER, SPRING 8	3							
16	1	22272-000150	RING, E-15	1							
17	1	26013-080252	BOLT, M8X 25	10							
18	1	26014-060122	BOLT, M6X 12	8							
19	1	26014-100202	BOLT, M10X 20	4							
20	1	26717-080002	NUT, M8	3							
21	1	22137-080000	WASHER, 8	1						W	1
	(A=F800105)										

Remarks
(1)No.6-1, 21 interchangeable by set.

N:Old $\frac{\text{Yes}}{\text{No}}$ New, Q:Old $\frac{\text{No}}{\text{Yes}}$ New, R:Old $\frac{\text{Yes}}{\text{Yes}}$ New, S:Old $\frac{\text{No}}{\text{No}}$ New, W:Add, Z:Discontinued, F:Interchangeable by set, K:Q'ty Change

Copyright (C) 2018 YANMAR CO., LTD. All RightsReserved.

Fig.65. SWING SHAFT

(A)=AW70GV,RSX(F)-IN (D)=
(B)= (E)=
(C)= (F)=

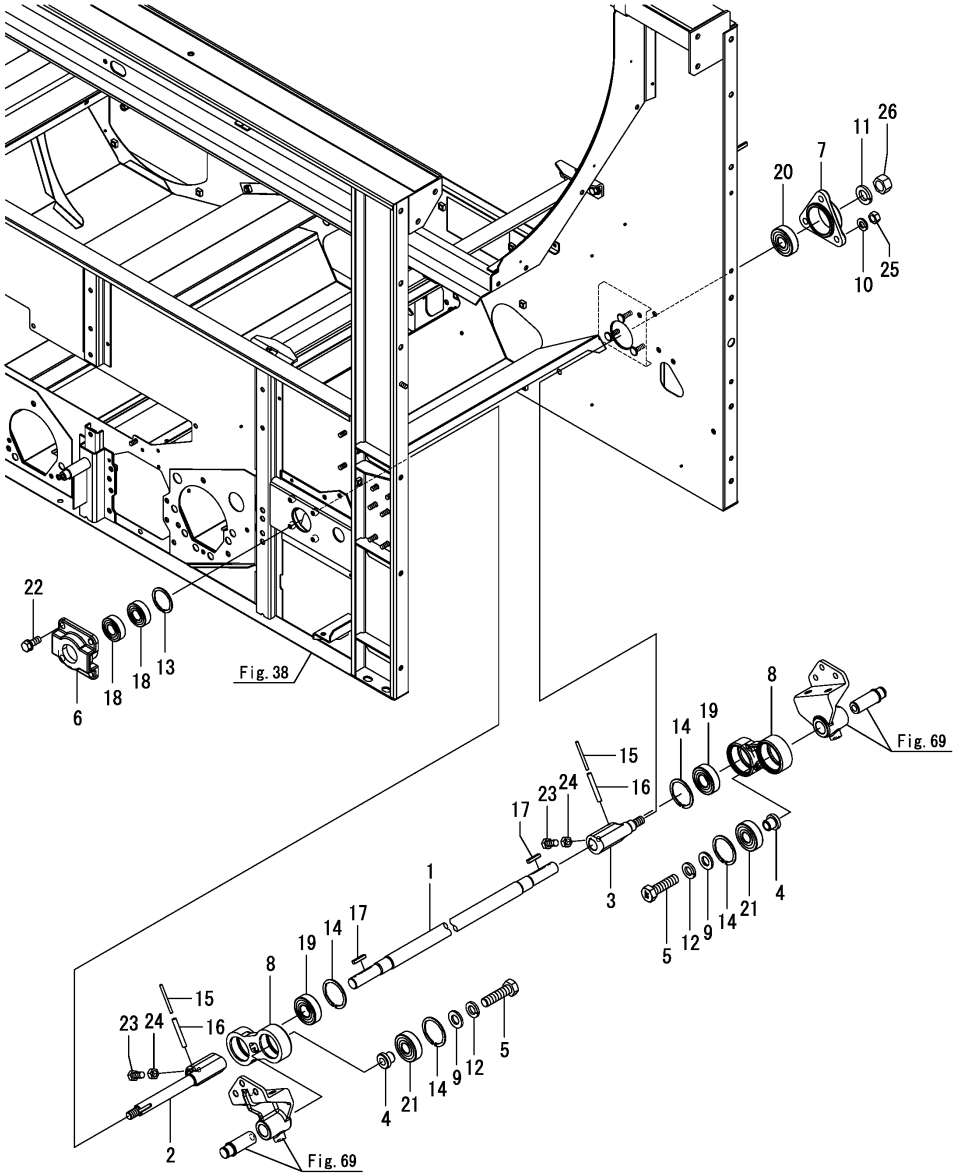

No.	Lev.	Parts No.	Description	Q'ty (A)	(B)	(C)	(D)	(E)	(F)	I	R
1	1	1E6B30-42011	SHAFT, SWING A	1							
2	1	1E6C80-42020	SHAFT,SWING L	1							
3	1	1E6B30-42030	SHAFT, SWING R	1							
4	1	1E8990-42150	BUSH, 12X17X19.5	2							
5	1	1E8990-42170	BOLT, 12X45 11T	2							
6	1	1E6B30-42240	METAL, SWING SHAFT L	1							
7	1	1E6B30-42250	METAL, SWING SHAFT R	1							
8	1	1E8990-42250	ARM, SWING REAR	2							
9	1	22137-120000	WASHER, 12	2							
10	1	22217-080000	WASHER, SPRING 8	3							
11	1	22217-120000	WASHER, SPRING 12	1							
12	1	22217-120000	WASHER, SPRING 12	2							
13	1	22252-000401	RING, 40	1							
14	1	22252-000471	RING, 47	4							
15	1	22351-030040	PIN, SPRING 3.0X40	2							
16	1	22351-050040	PIN, SPRING 5.0X40	2							
17	1	22551-050250	KEY, 5X 25	2							
18	1	24104-062034	BEARING, BALL 6203UU	2							
19	1	24104-062044	BEARING, BALL 6204UU	2							
20	1	24104-063034	BEARING, BALL 6303UU	1							
21	1	24104-063034	BEARING, BALL 6303UU	2							
22	1	26013-080202	BOLT, M8X 20	4							
23	1	26116-080162	BOLT, M8X 16 PLATED	2							
24	1	26717-080002	NUT, M8	2							
25	1	26717-080002	NUT, M8	3							
26	1	26737-120002	NUT, M12	1							

N:Old $\overset{\text{Yes}}{\underset{\text{No}}{\leftrightarrows}}$ New, Q:Old $\overset{\text{No}}{\underset{\text{Yes}}{\leftrightarrows}}$ New, R:Old $\overset{\text{Yes}}{\underset{\text{Yes}}{\leftrightarrows}}$ New, S:Old $\overset{\text{No}}{\underset{\text{No}}{\leftrightarrows}}$ New, W:Add, Z:Discontinued, F:Interchangeable by set, K:Q'ty Change

Copyright (C) 2018 YANMAR CO., LTD. All RightsReserved.

Fig.66. SWING ARM(REAR)

(A)=AW70GV,RSX(F)-IN
(B)=
(C)=
(D)=
(E)=
(F)=

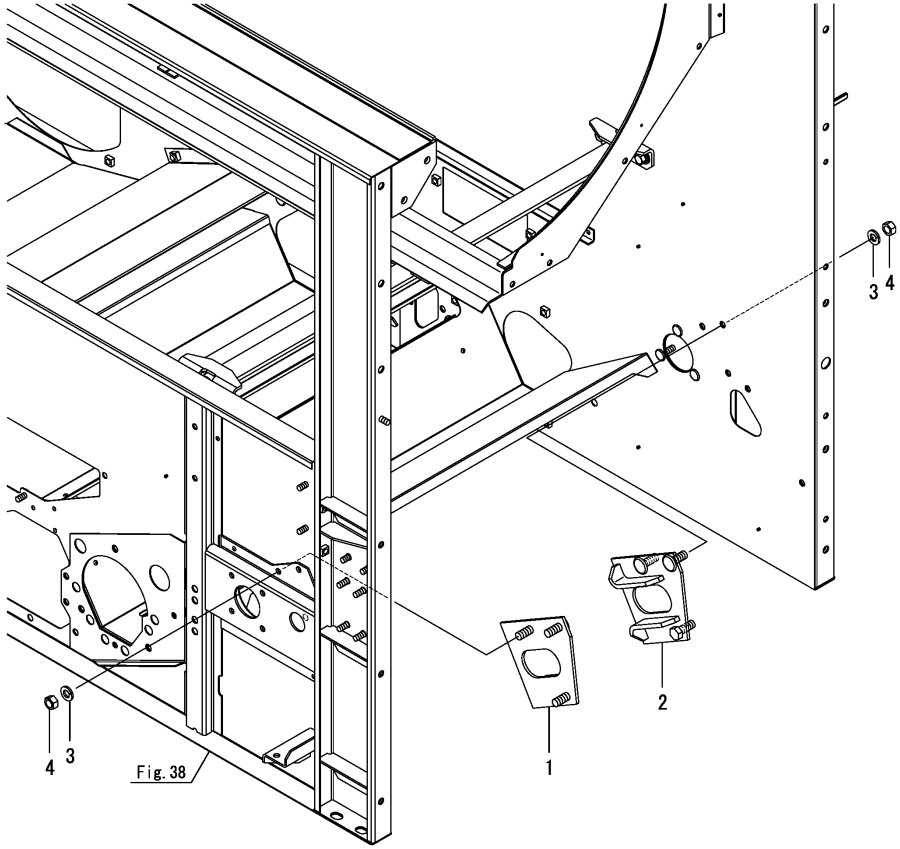

No.	Lev.	Parts No.	Description	Q'ty (A)	(B)	(C)	(D)	(E)	(F)	I	R
1	1	1E6B30-42051	GUIDE, FULCRUM R L	1							
2	1	1E6B30-42101	GUIDE, FULCRUM R R	1							
3	1	22217-080000	WASHER, SPRING 8	6							
4	1	26717-080002	NUT, M8	6							

N:Old ◄Yes/No► New, Q:Old ◄No/Yes► New, R:Old ◄Yes/Yes► New, S:Old ◄No/No► New, W:Add, Z:Discontinued, F:Interchangeable by set, K:Q'ty Change

Copyright (C) 2018 YANMAR CO., LTD. All RightsReserved.

Fig.67. SWING ARM(FRONT)

(A)=AW70GV,RSX(F)-IN (D)=
(B)= (E)=
(C)= (F)=

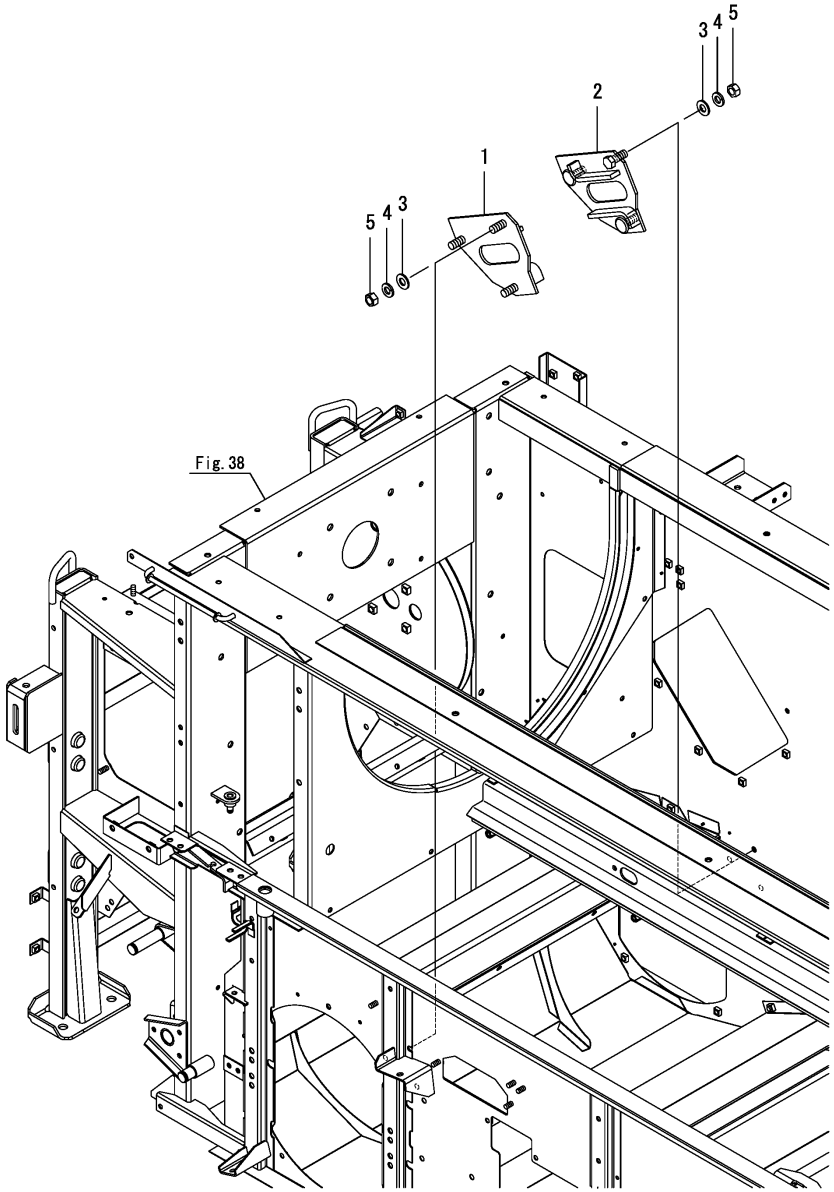

No.	Lev.	Parts No.	Description	Q'ty (A)	(B)	(C)	(D)	(E)	(F)	I	R
1	1	1E6C40-42130	GUIDE, FULCRUM F L	1							
2	1	1E6C40-42170	GUIDE, FULCRUM F R	1							
3	1	22137-080000	WASHER, 8	6							
4	1	22217-080000	WASHER, SPRING 8	6							
5	1	26717-080002	NUT, M8	6							

N:Old $\xleftarrow[\text{No}]{\text{Yes}}$ New, Q:Old $\xleftarrow[\text{Yes}]{\text{No}}$ New, R:Old $\xleftarrow[\text{Yes}]{\text{Yes}}$ New, S:Old $\xleftarrow[\text{No}]{\text{No}}$ New, W:Add, Z:Discontinued, F:Interchangeable by set, K:Q'ty Change

Copyright (C) 2018 YANMAR CO., LTD. All RightsReserved.

Fig.68. SWING FRAME(1)

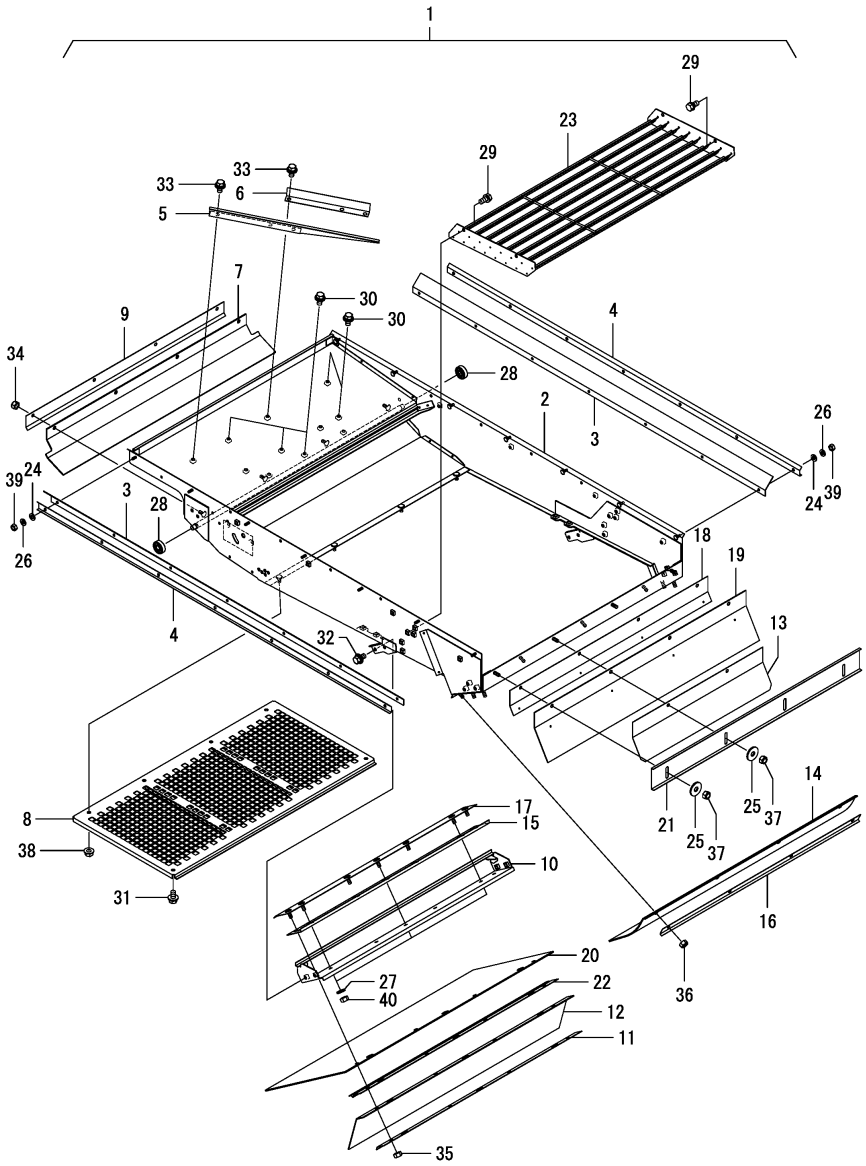

(A)=AW70GV,RSX(F)-IN (D)=
(B)= (E)=
(C)= (F)=

No.	Lev.	Parts No.	Description	Q'ty (A)	(B)	(C)	(D)	(E)	(F)	I	R
1	1	1E6C85-42452	SWING ASSY,15	1							1
1-1	1	1E6C85-42453	SWING ASSY,15	1						N	1
	(A=F800049)										
1-2	1	1E6C85-42454	SWING ASSY,15	1						N	1
	(A=F800063)										
2	2	1E6C85-42501	FRAME,SWING V	1							
2-1	2	1E6C85-42502	FRAME,SWING V	1						N	
	(A=F800063)										
3	2	1E6B30-42730	SEAL, SIDE A	2							
4	2	1E6B30-42740	RETAINER, SIDE A	2							
5	2	1E6B30-42761	PLATE, LEAD L	1							
6	2	1E6B30-42771	PLATE, LEAD	1							
7	2	1E6B30-42780	SEAL, SORTING WIND	1							
8	2	1E6C85-42800	NET,15	1							
9	2	1E6B30-42830	RETAINER, SOTER SEAL	1							
10	2	1E6C80-42891	PLATE ASSY,GRAIN	1							
11	2	1E6C85-42890	RETAINER,1ST SEAL	1							
12	2	1E6C85-42900	SEAL, 2ND FRONT	1							
13	2	1E6B30-42911	RETAINER,REAR SEAL A	1							
14	2	1E6B30-42920	SEAL, 2ND	1							
15	2	1E6C80-42920	PLATE, GRAIN FLOW C	1							
16	2	1E6B30-42930	RETAINER, 2ND SEAL	1							
17	2	1E6C80-42930	PLATE, GRAIN FLOW D	1							
18	2	1E6B30-42940	RETAINER,REAR SEAL B	1							
19	2	1E6B30-42951	SEAL, REAR	1							
20	2	1E6C80-42950	SEAL, 1ST	1							
21	2	1E6B30-42961	PLATE,SWING REAR	1							
22	2	1E6C80-42960	SUPPORT,SEAL	1							
23	2	1E6C40-43150	SIEVE, CHAFF B	1							
24	2	22137-060000	WASHER, 6	14							
25	2	22157-080000	WASHER, 8	4							
26	2	22217-060000	WASHER, SPRING 6	14							
27	2	22217-080000	WASHER, SPRING 8	3							
28	2	24104-063014	BEARING, BALL 6301UU	2							
29	2	26013-080162	BOLT, M8X 16	4							
30	2	26014-080162	BOLT, M8X 16	5							
31	2	26014-080162	BOLT, M8X 16	2							
32	2	26014-080162	BOLT, M8X 16	4							
33	2	26014-080162	BOLT, M8X 16	6							
34	2	26346-080002	NUT, M8	4							
35	2	26346-080002	NUT, M8	4							
36	2	26346-080002	NUT, M8	4							
37	2	26346-080002	NUT, M8	4							
38	2	26367-080002	NUT, M8	4							
39	2	26717-060002	NUT, M6	14							
40	2	26717-080002	NUT, M8	3							

Remarks
(1)No.1 includes Fig.68 & Fig.69.
* This item is applicable to [(A)=F800268] or previous machines(Refer to Fig.170, 171, 172).

N:Old $\frac{\text{Yes}}{\text{No}}$ New, Q:Old $\frac{\text{No}}{\text{Yes}}$ New, R:Old $\frac{\text{Yes}}{\text{Yes}}$ New, S:Old $\frac{\text{No}}{\text{No}}$ New, W:Add, Z:Discontinued, F:Interchangeable by set, K:Q'ty Change

Copyright (C) 2018 YANMAR CO., LTD. All RightsReserved.

Fig.170. (68A)SWING FRAME(1)

(A)=AW70GV,RSX(F)-IN
(B)=
(C)=
(D)=
(E)=
(F)=

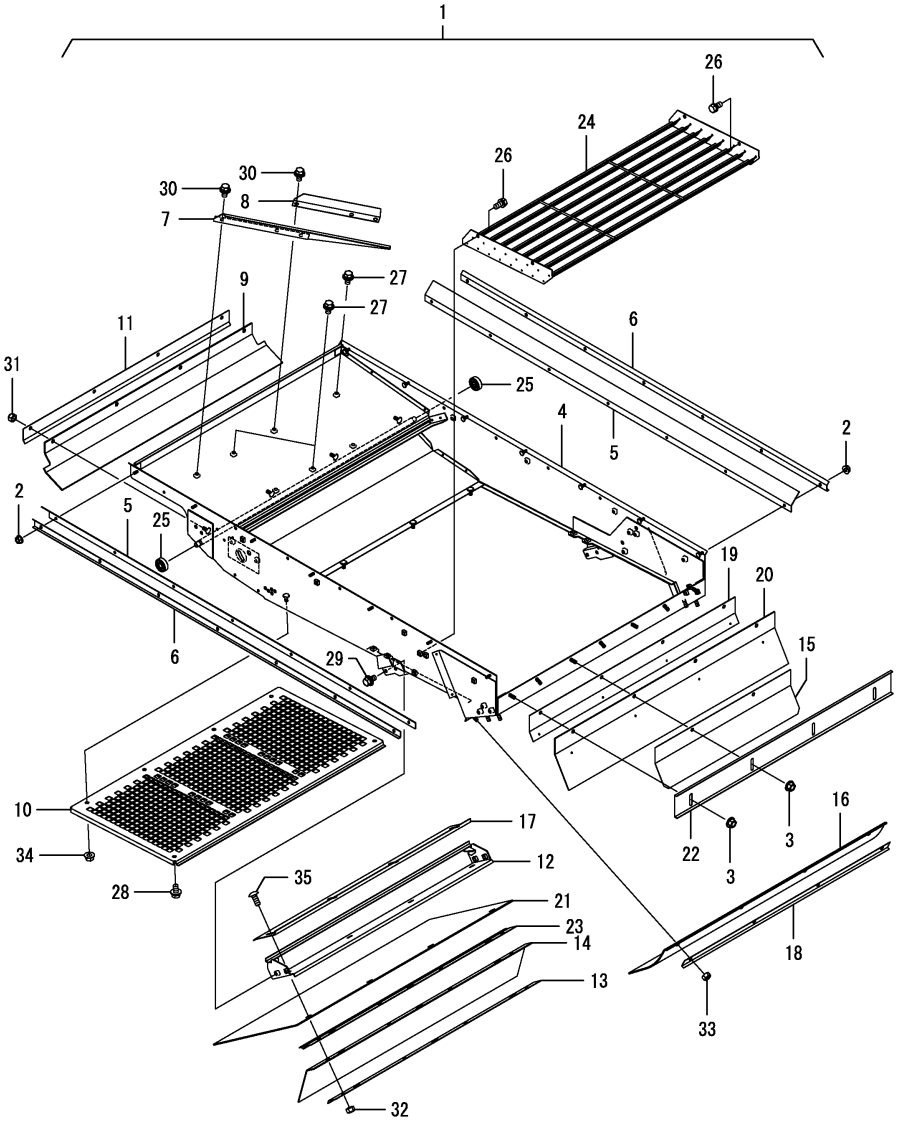

No.	Lev.	Parts No.	Description	Q'ty (A)	(B)	(C)	(D)	(E)	(F)	I	R
1	1	1E6C85-42455	SWING ASSY,15	1							1
2	2	194990-22130	NUT, M6	14							
3	2	194990-22140	NUT, M8	4							
4	2	1E6C85-42503	FRAME,SWING V	1							
5	2	1E6B30-42730	SEAL, SIDE A	2							
6	2	1E6B30-42740	RETAINER, SIDE A	2							
7	2	1E6B30-42762	PLATE,LEAD L	1							
8	2	1E6B30-42772	PLATE,LEAD	1							
9	2	1E6B30-42780	SEAL, SORTING WIND	1							
10	2	1E6C85-42800	NET,15	1							
11	2	1E6B30-42830	RETAINER, SOTER SEAL	1							
12	2	1E6C80-42892	PLATE ASSY,GRAIN	1							
13	2	1E6C85-42890	RETAINER,1ST SEAL	1							
14	2	1E6C85-42900	SEAL, 2ND FRONT	1							
15	2	1E6B30-42911	RETAINER,REAR SEAL A	1							
16	2	1E6B30-42920	SEAL, 2ND	1							
17	2	1E6C80-42921	PLATE, GRAIN FLOW C	1							
18	2	1E6B30-42930	RETAINER, 2ND SEAL	1							
19	2	1E6B30-42940	RETAINER,REAR SEAL B	1							
20	2	1E6B30-42951	SEAL, REAR	1							
21	2	1E6C80-42951	SEAL, 1ST	1							
22	2	1E6B30-42961	PLATE,SWING REAR	1							
23	2	1E6C80-42960	SUPPORT,SEAL	1							
24	2	1E6C40-43150	SIEVE, CHAFF B	1							
25	2	24104-063014	BEARING, BALL 6301UU	2							
26	2	26013-080162	BOLT, M8X 16	4							
27	2	26014-080162	BOLT, M8X 16	3							
28	2	26014-080162	BOLT, M8X 16	2							
29	2	26014-080162	BOLT, M8X 16	4							
30	2	26014-080162	BOLT, M8X 16	4							
31	2	26346-080002	NUT, M8	4							
32	2	26346-080002	NUT, M8	4							
33	2	26346-080002	NUT, M8	4							
34	2	26367-080002	NUT, M8	4							
35	2	26487-080202	BOLT, M8X20	4							

Remarks
* This item is applicable to [(A)=F800269] or previous machines(Refer to Fig.68, 69, 70).
(1)No.1 includes Fig.170 & Fig.171.

N:Old $\frac{\text{Yes}}{\text{No}}$ New, Q:Old $\frac{\text{No}}{\text{Yes}}$ New, R:Old $\frac{\text{Yes}}{\text{Yes}}$ New, S:Old $\frac{\text{No}}{\text{No}}$ New, W:Add, Z:Discontinued, F:Interchangeable by set, K:Q'ty Change

Copyright (C) 2018 YANMAR CO., LTD. All RightsReserved.

Fig.69. SWING FRAME(2)

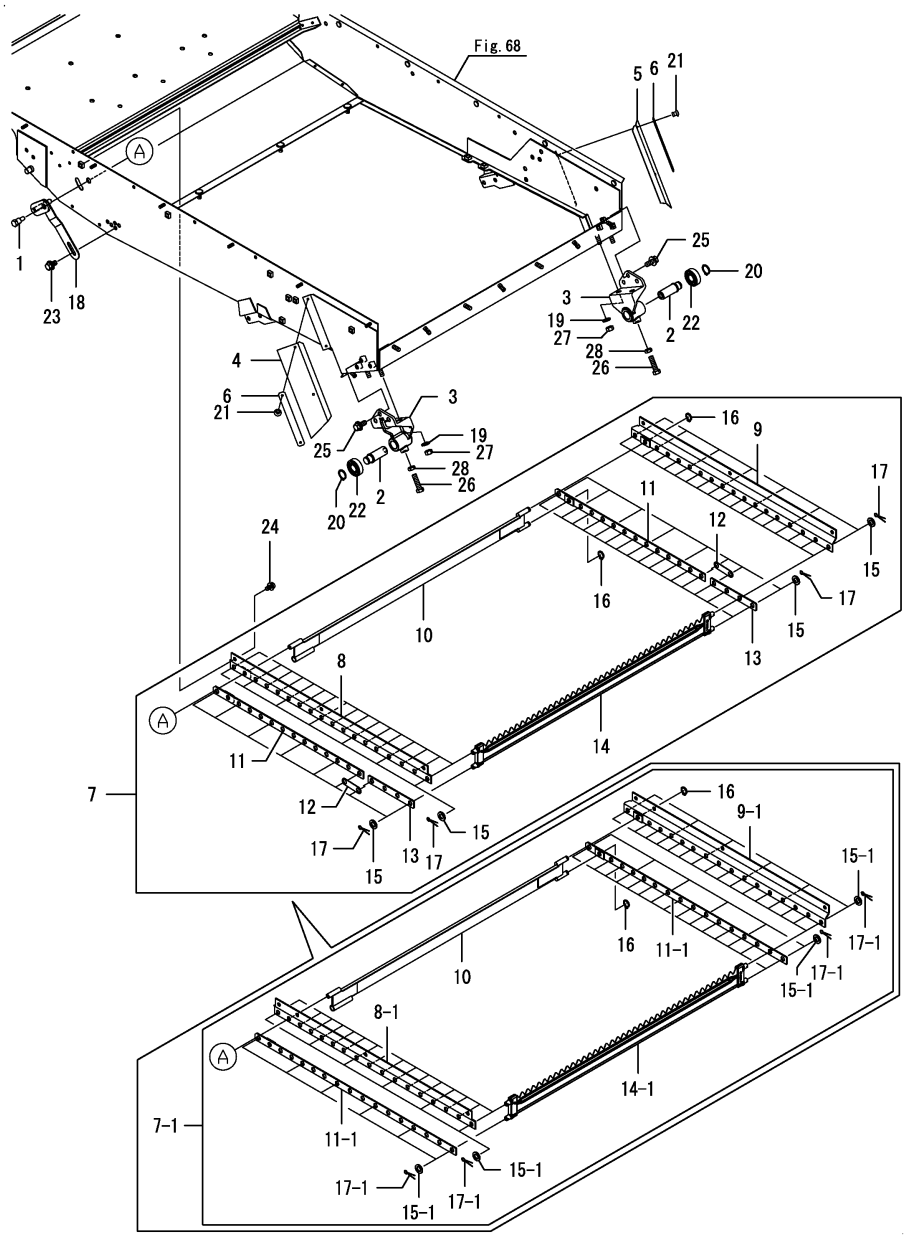

(A)=AW70GV,RSX(F)-IN (D)=
(B)= (E)=
(C)= (F)=

No.	Lev.	Parts No.	Description	Q'ty (A)	(B)	(C)	(D)	(E)	(F)	I	R
1	2	1E8230-14400	PIN, LOCK LEVER	1							
2	2	1E6B30-42190	SHAFT, SWING REAR	2							
3	2	1E6B30-42200	METAL, SWING REAR	2							
3-1	2	1E6B30-42201	METAL, SWING REAR	2						N	
	(A=F800049)										
4	2	1E6C80-42970	SEAL, SIDE L	1							
5	2	1E6C80-42980	SEAL, SIDE R	1							
6	2	1E6C80-42990	PLATE, SIDE B	2							
7	2	1E6C80-43000	FIN ASSY	1							
7-1	2	1E6C81-43000	FIN ASSY	1						N	
	(A=F800049)										
8	3	1E6C80-43010	BRACKET, FIN L	1							
8-1	3	1E6C81-43010	BRACKET, FIN L	1						N	
	(A=F800049)										
9	3	1E6C80-43050	BRACKET, FIN R	1							
9-1	3	1E6C81-43050	BRACKET, FIN R	1						N	
	(A=F800049)										
10	3	1E6C80-43100	FIN,FULCRUM	1							
11	3	1E6C80-43160	PLATE,CHAFF	2							
11-1	3	1E6C81-43160	PLATE, CHAFF	2						N	
	(A=F800049)										
12	3	1E6C80-43180	JOINT, CHAFF	2						Z	
	(A=F800049)										
13	3	1E6C80-43190	PLATE,CHAFF D	2						Z	
	(A=F800049)										
14	3	1E6C80-43200	FIN, CHAFF	17							
14-1	3	1E6C80-43200	FIN, CHAFF	16						K	
	(A=F800049)										
15	3	22117-100000	WASHER, 10	30							
15-1	3	22117-100000	WASHER, 10	24						K	
	(A=F800049)										
16	3	22242-000100	RING, 10	2							
17	3	22417-200150	PIN, COTTER 2.0X15	30							
17-1	3	22417-200150	PIN, COTTER 2.0X15	24						K	
	(A=F800049)										
18	2	1E6C85-43350	ARM,FULC.CHAFF	1							
19	2	22217-080000	WASHER, SPRING 8	4							
20	2	22242-000170	RING, 17	2							
21	2	22697-400321	RIVET, 4.0X 3.2	4							
22	2	24104-062034	BEARING, BALL 6203UU	2							
23	2	26014-080162	BOLT, M8X 16	1							
24	2	26014-080162	BOLT, M8X 16	6							
25	2	26014-080202	BOLT, M8X 20	6							
26	2	26116-080304	BOLT, M8X 30 PLATED	2							
27	2	26717-080002	NUT, M8	4							
28	2	26757-080002	NUT, LOCK M8	2							

Remarks
* This figure is incorporated in Fig.68 No.1.
* This item is applicable to [(A)=F800268] or previous machines(Refer to Fig.170, 171, 172).

N:Old $\frac{\text{Yes}}{\text{No}}$ New, Q:Old $\frac{\text{No}}{\text{Yes}}$ New, R:Old $\frac{\text{Yes}}{\text{Yes}}$ New, S:Old $\frac{\text{No}}{\text{No}}$ New, W:Add, Z:Discontinued, F:Interchangeable by set, K:Q'ty Change

Copyright (C) 2018 YANMAR CO., LTD. All RightsReserved.

Fig.171. (69A)SWING FRAME(2)

(A)=AW70GV,RSX(F)-IN (D)=
(B)= (E)=
(C)= (F)=

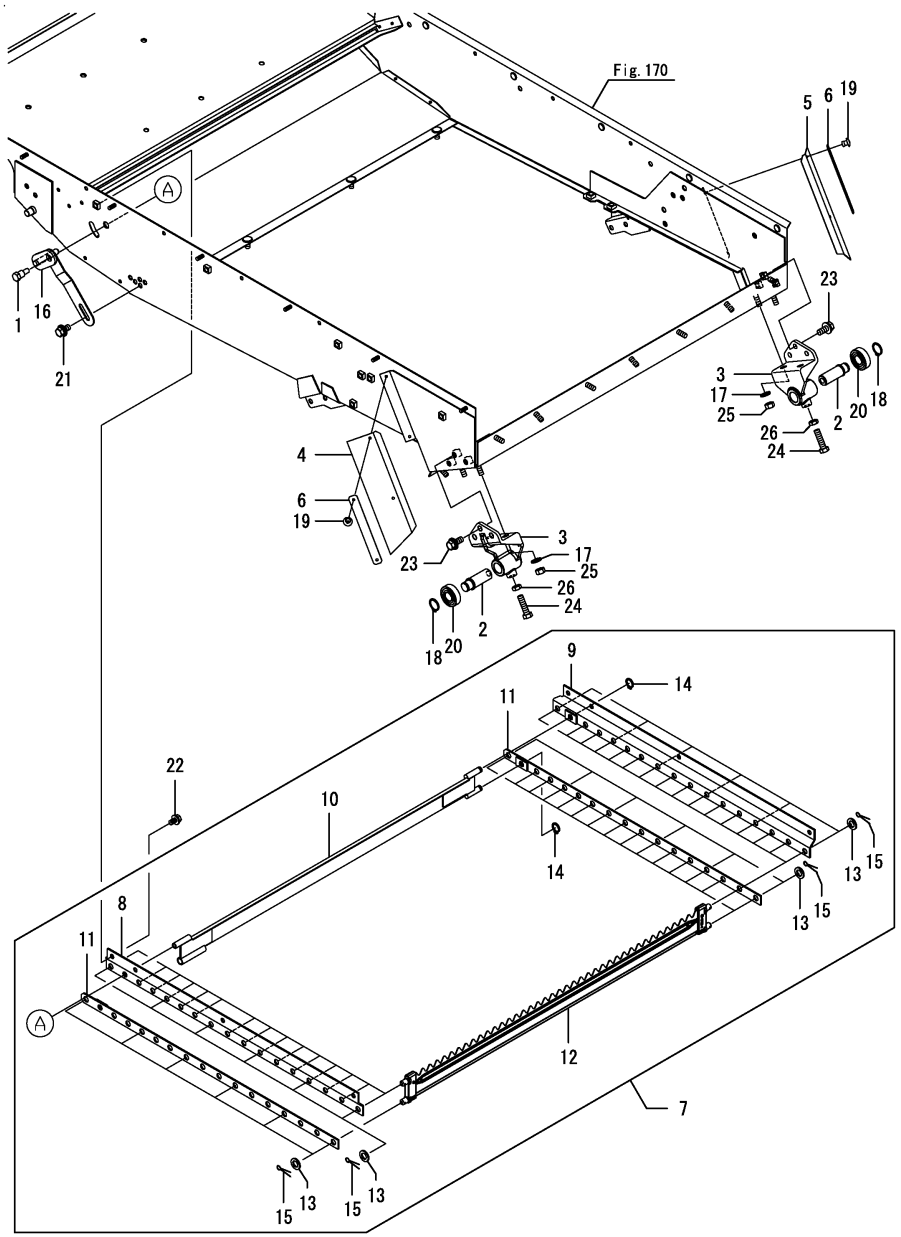

No.	Lev.	Parts No.	Description	Q'ty (A)	(B)	(C)	(D)	(E)	(F)	I	R
1	2	1E8230-14400	PIN, LOCK LEVER	1							
2	2	1E6B30-42190	SHAFT, SWING REAR	2							
3	2	1E6B30-42201	METAL, SWING REAR	2							
4	2	1E6C80-42970	SEAL, SIDE L	1							
5	2	1E6C80-42980	SEAL, SIDE R	1							
6	2	1E6C80-42990	PLATE, SIDE B	2							
7	2	1E6C81-43000	FIN ASSY	1							
8	3	1E6C81-43010	BRACKET, FIN L	1							
9	3	1E6C81-43050	BRACKET, FIN R	1							
10	3	1E6C80-43100	FIN,FULCRUM	1							
11	3	1E6C81-43160	PLATE, CHAFF	2							
12	3	1E6C80-43200	FIN, CHAFF	16							
13	3	22117-100000	WASHER, 10	24							
14	3	22242-000100	RING, 10	2							
15	3	22417-200150	PIN, COTTER 2.0X15	24							
16	2	1E6C85-43350	ARM,FULC.CHAFF	1							
17	2	22217-080000	WASHER, SPRING 8	4							
18	2	22242-000170	RING, 17	2							
19	2	22697-400321	RIVET, 4.0X 3.2	4							
20	2	24104-062034	BEARING, BALL 6203UU	2							
21	2	26014-080162	BOLT, M8X 16	1							
22	2	26014-080162	BOLT, M8X 16	6							
23	2	26014-080202	BOLT, M8X 20	6							
24	2	26116-080304	BOLT, M8X 30 PLATED	2							
25	2	26717-080002	NUT, M8	4							
26	2	26757-080002	NUT, LOCK M8	2							

Remarks
* This item is applicable to [(A)=F800269] or previous machines(Refer to Fig.68, 69, 70).
* This figure is incorporated in Fig.170 No.1.

N:Old ←Yes/No→ New, Q:Old ←No/Yes→ New, R:Old ←Yes/Yes→ New, S:Old ←No/No→ New, W:Add, Z:Discontinued, F:Interchangeable by set, K:Q'ty Change

Copyright (C) 2018 YANMAR CO., LTD. All RightsReserved.

Fig.70. SWING FRAME(3)

(A)=AW70GV,RSX(F)-IN (D)=
(B)= (E)=
(C)= (F)=

No.	Lev.	Parts No.	Description	Q'ty (A)	(B)	(C)	(D)	(E)	(F)	I	R
1	1	1E6C85-31440	COVER, CLEANING	1							
1-1	1 (A=F800083)	1E6C85-31441	COVER, CLEANING	1						N	
2	1	1E6B30-42470	SEAL, FRONT B	1							
3	1	1E6B30-42750	SEAL, FRONT	1							
4	1	1E6B30-42790	RETAINER, SEAL FRONT	1							
5	1	26014-080202	BOLT, M8X 20	4							
6	1	26367-080002	NUT, M8	2							

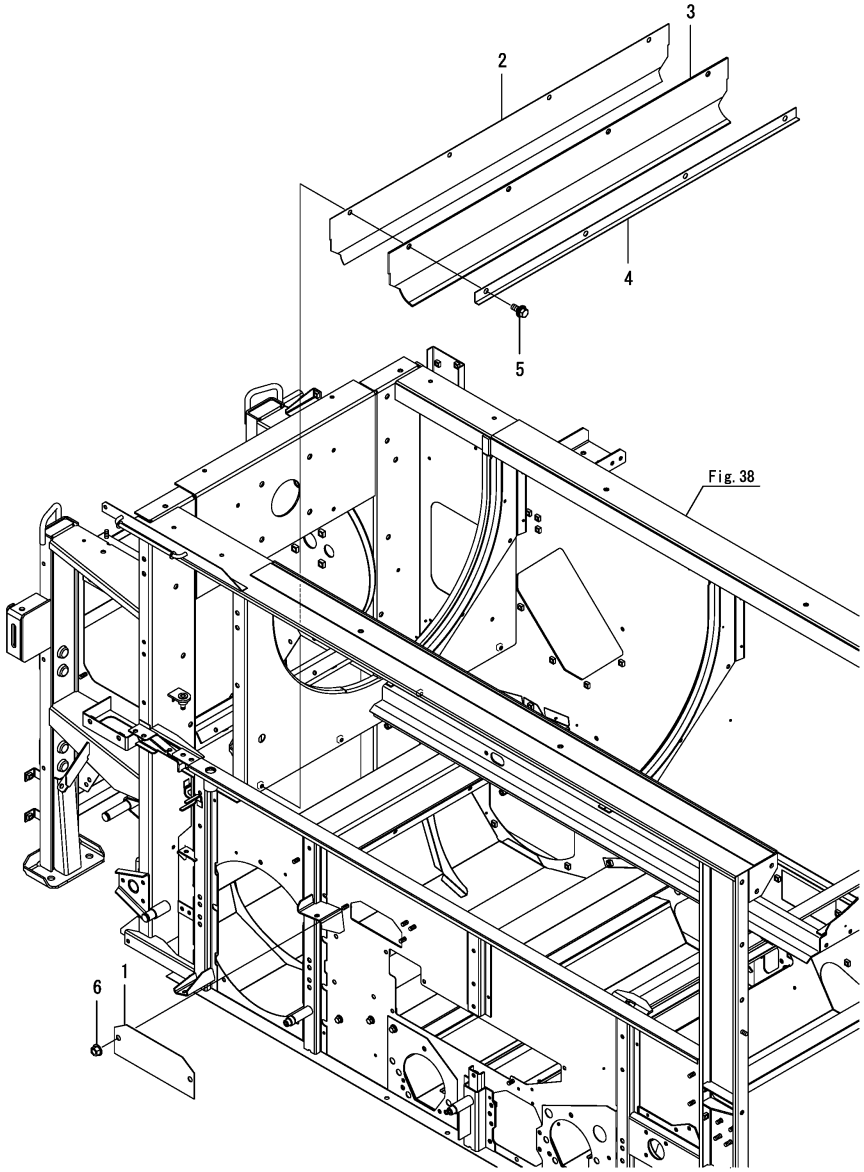

Remarks
* This item is applicable to [(A)=F800268] or previous machines(Refer to Fig.170, 171, 172).

N:Old ◄Yes/No► New, Q:Old ◄No/Yes► New, R:Old ◄Yes/Yes► New, S:Old ◄No/No► New, W:Add, Z:Discontinued, F:Interchangeable by set, K:Q'ty Change

Copyright (C) 2018 YANMAR CO., LTD. All RightsReserved.

Fig.172. (70A)SWING FRAME(3)

(A)=AW70GV,RSX(F)-IN (D)=
(B)= (E)=
(C)= (F)=

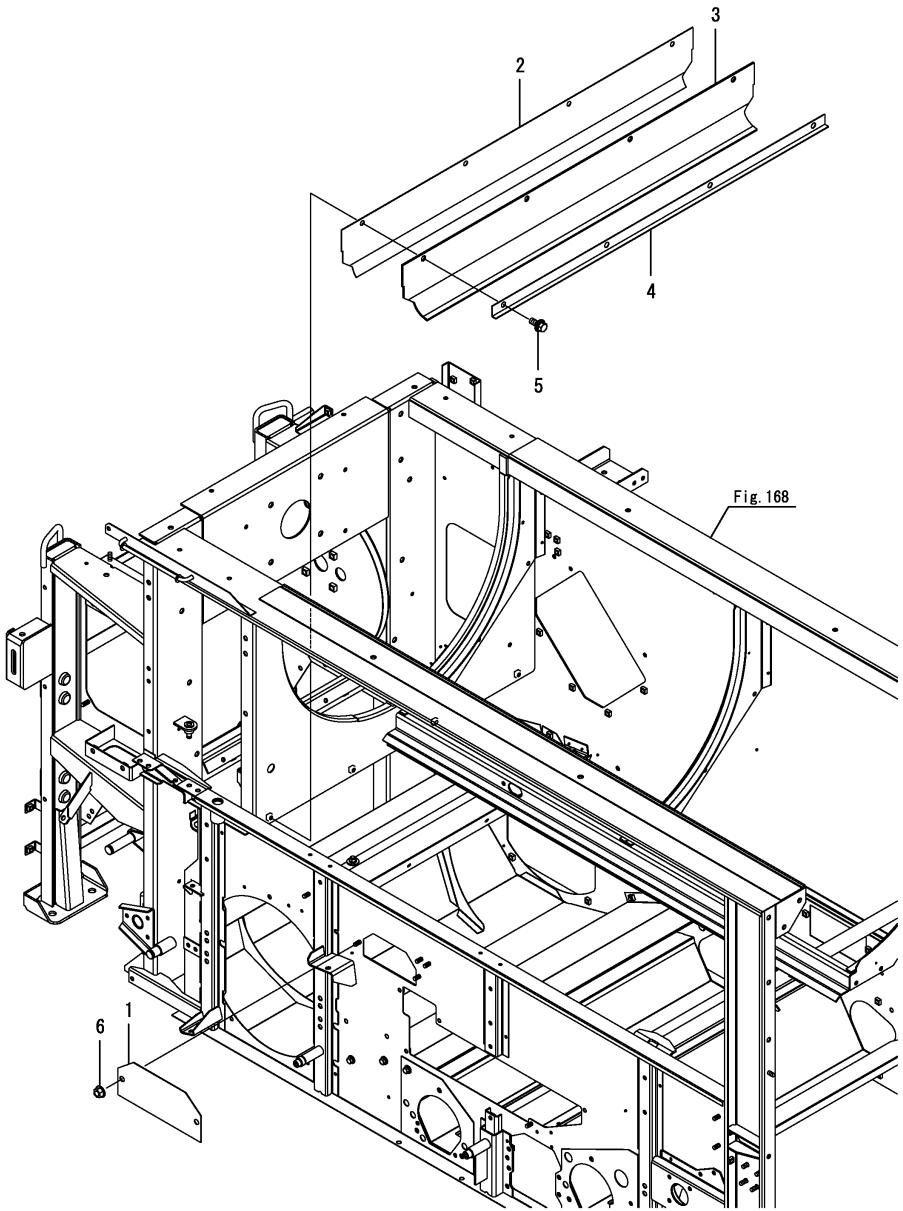

No.	Lev.	Parts No.	Description	Q'ty (A)	(B)	(C)	(D)	(E)	(F)	I	R
1	1	1E6C85-31441	COVER, CLEANING	1							
2	1	1E6B30-42470	SEAL, FRONT B	1							
3	1	1E6B30-42750	SEAL, FRONT	1							
4	1	1E6B30-42790	RETAINER, SEAL FRONT	1							
5	1	26014-080202	BOLT, M8X 20	4							
6	1	26367-080002	NUT, M8	2							

Remarks
* This item is applicable to [(A)=F800269] or previous machines(Refer to Fig.68, 69, 70).

N:Old $\xleftarrow[\text{No}]{\text{Yes}}$ New, Q:Old $\xleftarrow[\text{Yes}]{\text{No}}$ New, R:Old $\xleftarrow[\text{Yes}]{\text{Yes}}$ New, S:Old $\xleftarrow[\text{No}]{\text{No}}$ New, W:Add, Z:Discontinued, F:Interchangeable by set, K:Q'ty Change

Copyright (C) 2018 YANMAR CO., LTD. All RightsReserved.

Fig.71. WINNOWER SHUTTER

(A)=AW70GV,RSX(F)-IN (D)=
(B)= (E)=
(C)= (F)=

No.	Lev.	Parts No.	Description	Q'ty (A)	(B)	(C)	(D)	(E)	(F)	I	R
1	1	1E6B30-43712	SHUTTER, WINNOWER	2							
2	1	22157-080000	WASHER, 8	2							
3	1	26013-080162	BOLT, M8X 16	2							

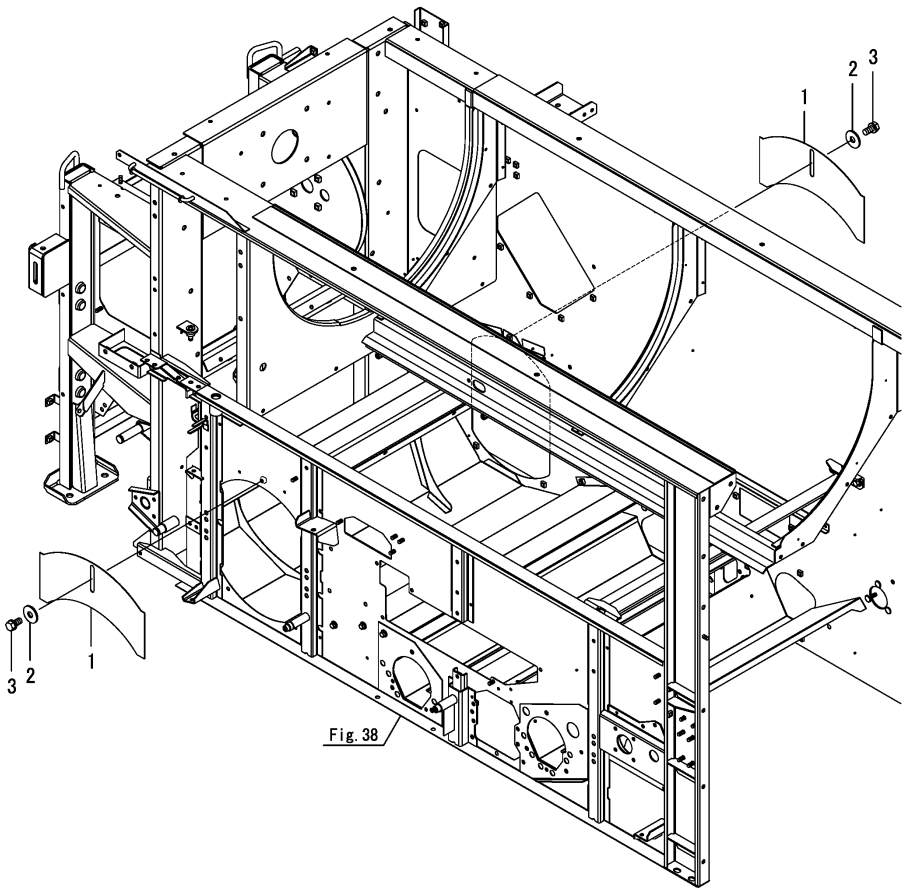

N:Old ◄Yes/No► New, Q:Old ◄No/Yes► New, R:Old ◄Yes/Yes► New, S:Old ◄No/No► New, W:Add, Z:Discontinued, F:Interchangeable by set, K:Q'ty Change

Copyright (C) 2018 YANMAR CO., LTD. All RightsReserved.

Fig.72. WINNOWER FAN

(A)=AW70GV,RSX(F)-IN (D)=
(B)= (E)=
(C)= (F)=

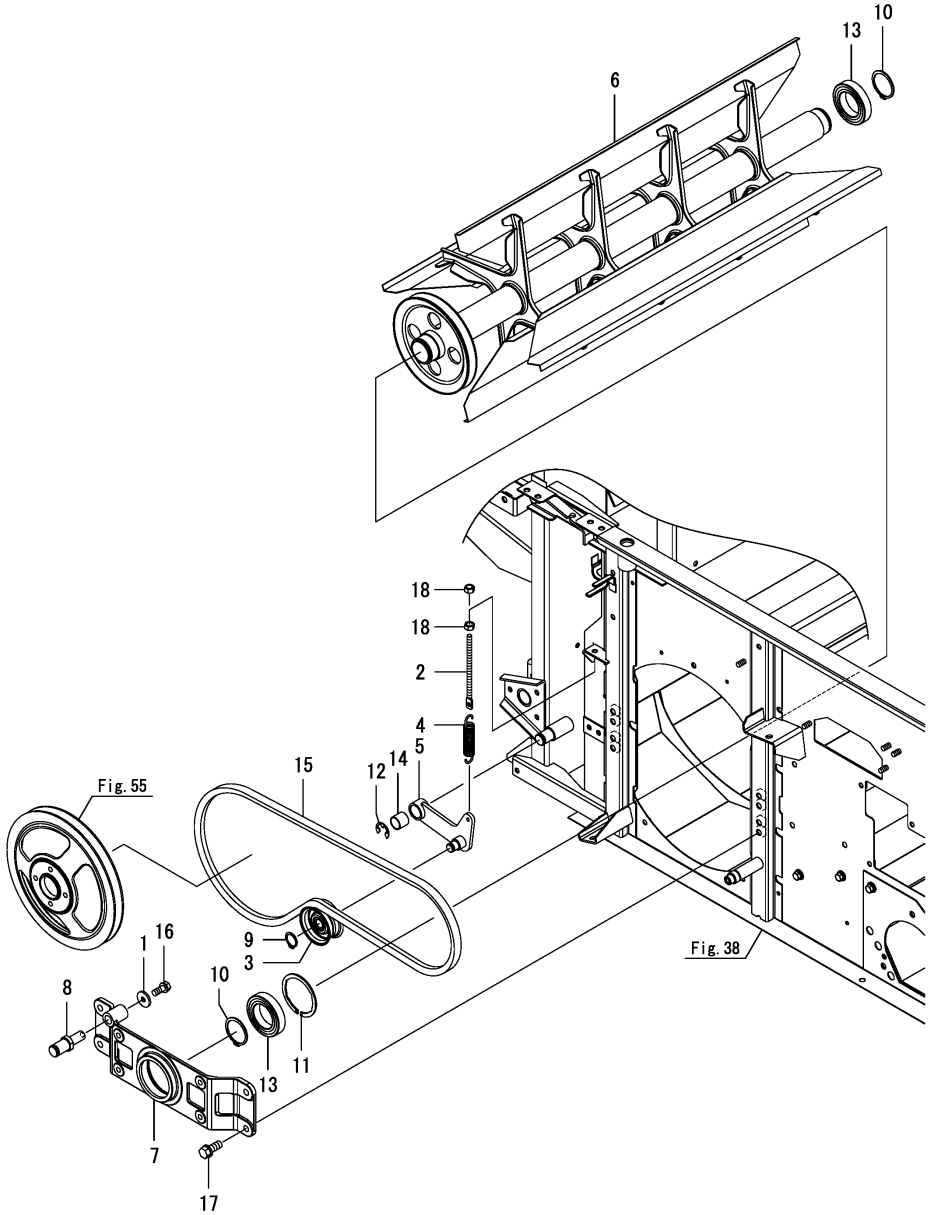

No.	Lev.	Parts No.	Description	Q'ty (A)	(B)	(C)	(D)	(E)	(F)	I	R
1	1	1E8559-22220	WASHER, 8.5X28X3.2	1							
2	1	1E8559-35170	SCREW, TENSION 8X140	1							
3	1	1E6B30-35760	ROLLER, TENSION 60	1							
4	1	1E6B30-35780	SPRING, 2.6X15X92	1							
5	1	1E6C80-36200	ARM, TENSION 140	1							
6	1	1E6C80-44250	FAN, WINNOWER	1							
6-1	1	1E6C80-44251	FAN, WINNOWER	1						N	
	(A=F800063)										
7	1	1E6C80-44310	METAL, WINNOWER LA	1							
8	1	1E6C80-44330	SHAFT, FULCRUM	1							
9	1	22242-000150	RING, 15	1							
10	1	22242-000450	RING, 45	2							
11	1	22252-000751	RING, 75	1							
12	1	22272-000150	RING, E-15	1							
13	1	24104-060094	BEARING, BALL 6009UU	2							
14	1	24550-020200	BUSH, 20X20	1							
15	1	25123-005802	V BELT, SB 58 H2	1							
16	1	26013-080202	BOLT, M8X 20	1							
17	1	26013-100252	BOLT, M10X 25	4							
18	1	26717-080002	NUT, M8	2							

N:Old $\overset{\text{Yes}}{\underset{\text{No}}{\leftrightarrows}}$ New, Q:Old $\overset{\text{No}}{\underset{\text{Yes}}{\leftrightarrows}}$ New, R:Old $\overset{\text{Yes}}{\underset{\text{Yes}}{\leftrightarrows}}$ New, S:Old $\overset{\text{No}}{\underset{\text{No}}{\leftrightarrows}}$ New, W:Add, Z:Discontinued, F:Interchangeable by set, K:Q'ty Change

Copyright (C) 2018 YANMAR CO., LTD. All RightsReserved.

Fig.73. COVER(BODY)

(A)=AW70GV,RSX(F)-IN (D)=
(B)= (E)=
(C)= (F)=

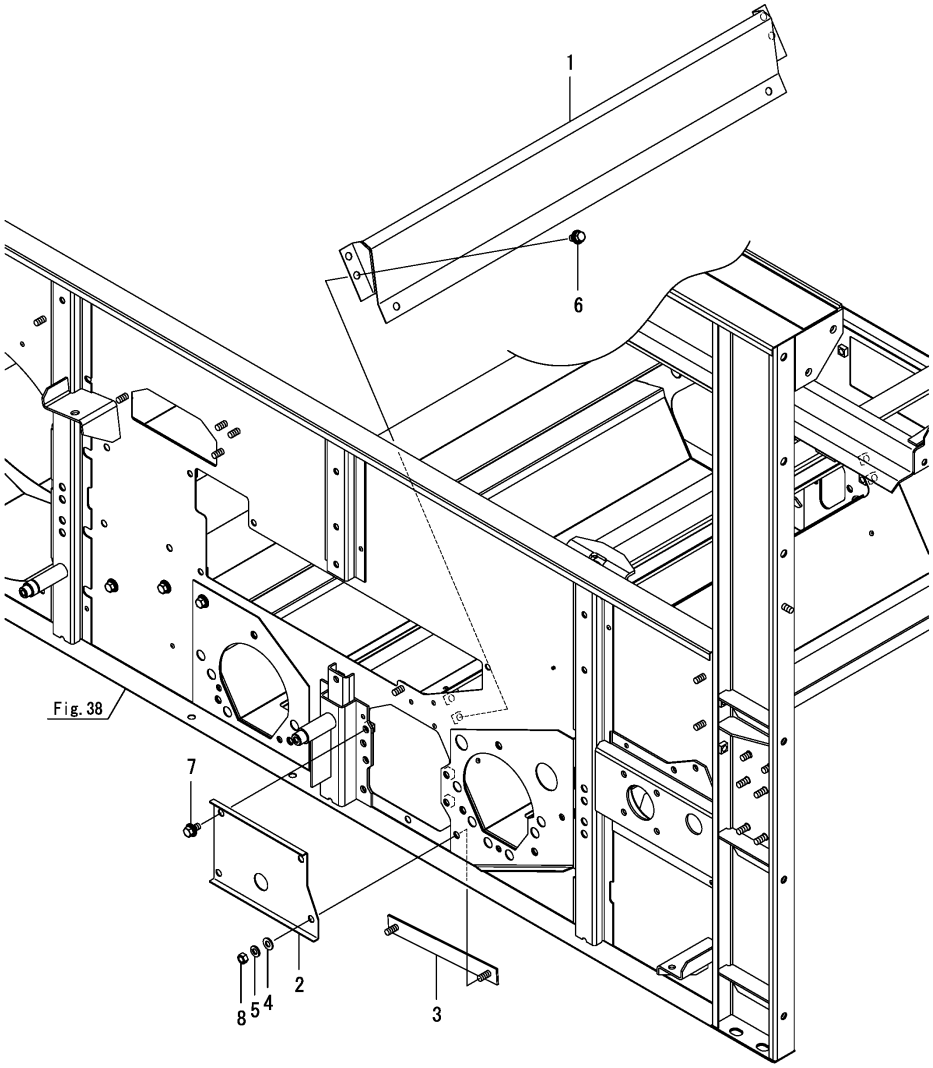

No.	Lev.	Parts No.	Description	Q'ty (A)	(B)	(C)	(D)	(E)	(F)	I	R
1	1	1E6B35-44300	COVER, 2ND FAN	1							
2	1	1E6B35-44500	COVER, BODY	1							
3	1	1E6B35-44550	STAY, COVER	1							
4	1	22137-080000	WASHER, 8	2							
5	1	22217-080000	WASHER, SPRING 8	2							
6	1	26014-080162	BOLT, M8X 16	4							
7	1	26014-080162	BOLT, M8X 16	2							
8	1	26717-080002	NUT, M8	2							

N:Old $\xleftrightarrow[\text{No}]{\text{Yes}}$ New, Q:Old $\xleftrightarrow[\text{Yes}]{\text{No}}$ New, R:Old $\xleftrightarrow[\text{Yes}]{\text{Yes}}$ New, S:Old $\xleftrightarrow[\text{No}]{\text{No}}$ New, W:Add, Z:Discontinued, F:Interchangeable by set, K:Q'ty Change

Copyright (C) 2018 YANMAR CO., LTD. All RightsReserved.

Fig.74. CONVEYOR(1ST)

(A)=AW70GV,RSX(F)-IN (D)=
(B)= (E)=
(C)= (F)=

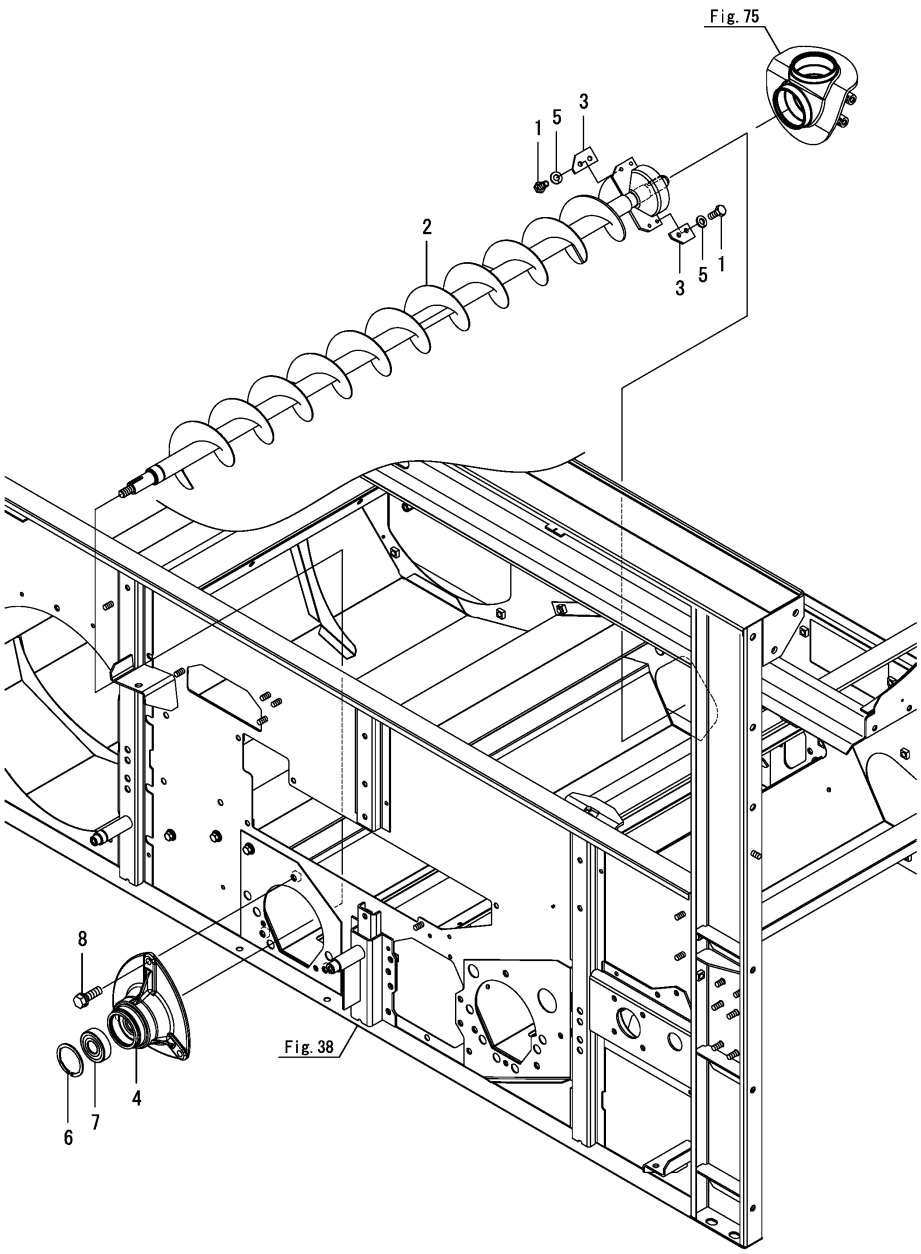

No.	Lev.	Parts No.	Description	Q'ty (A)	(B)	(C)	(D)	(E)	(F)	I	R
1	1	1E8559-35380	BOLT, M6X16 10.9	4							
2	1	7E6C80-45000	CONVEYOR, 1ST-49	1							
3	1	1E6C80-45080	BLADE, SUCCESSION	2							
4	1	1E6B30-45750	METAL, 1ST L	1							
5	1	22217-060000	WASHER, SPRING 6	4							
6	1	22252-000521	RING, 52	1							
7	1	24104-063044	BEARING, BALL 6304UU	1							
8	1	26013-080252	BOLT, M8X 25	3							

N:Old $\frac{\text{Yes}}{\text{No}}$ New, Q:Old $\frac{\text{No}}{\text{Yes}}$ New, R:Old $\frac{\text{Yes}}{\text{Yes}}$ New, S:Old $\frac{\text{No}}{\text{No}}$ New, W:Add, Z:Discontinued, F:Interchangeable by set, K:Q'ty Change

Copyright (C) 2018 YANMAR CO., LTD. All RightsReserved.

Fig.75. GRAIN ELEVATE AUGER CASE

(A)=AW70GV,RSX(F)-IN (D)=
(B)= (E)=
(C)= (F)=

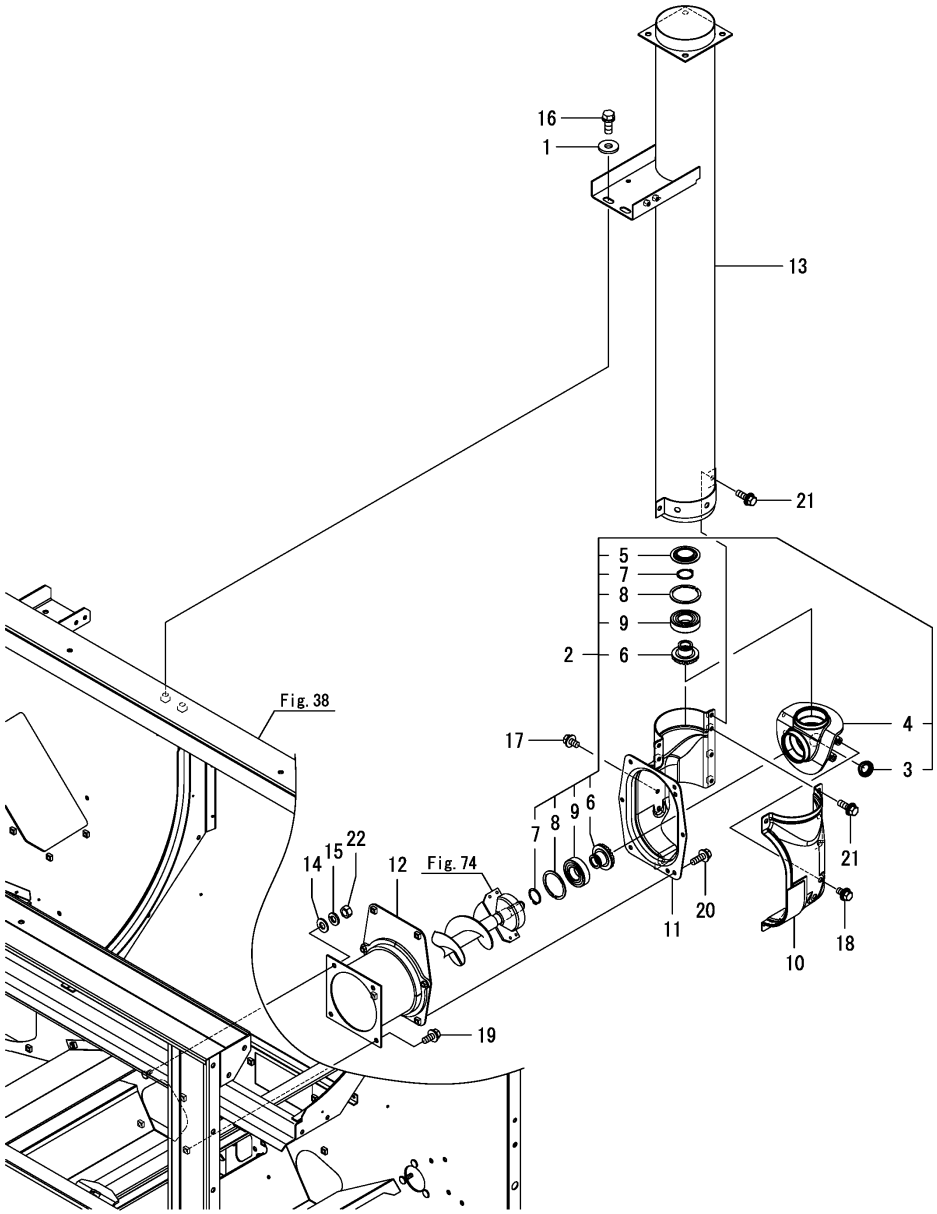

No.	Lev.	Parts No.	Description	Q'ty (A)	(B)	(C)	(D)	(E)	(F)	I	R
1	1	1E8559-17110	COLLAR, 10.5X28X3.2	2							
2	1	7E6B30-45100-1	CASE ASSY, BEVEL	1							
3	2	1C730C-36280	PLUG, BORE 28	1							
4	2	1E6B30-45104-1	CASE, BEVEL	1							
5	2	1E6B30-45110	SEAL, METAL	1							
6	2	1E6B30-45130	GEAR, BEVEL 17A	2							
7	2	22242-000300	RING, 30	2							
8	2	22252-000621	RING, 62	2							
9	2	24104-062064	BEARING, BALL 6206UU	2							
10	1	1E6B30-45191-1	COVER ASSY, CASE	1							
11	1	1E6B30-45201	CASE, SUCCESSION	1							
12	1	1E6B30-45302	PIPE, SUCCESSION	1							
13	1	1E6C41-45501	PIPE, GRAIN ELEVAT.G	1							
14	1	22137-080000	WASHER, 8	1							
15	1	22217-080000	WASHER, SPRING 8	1							
16	1	26013-100252	BOLT, M10X 25	2							
17	1	26014-080162	BOLT, M8X 16	2							
18	1	26014-080162	BOLT, M8X 16	2							
19	1	26014-080202	BOLT, M8X 20	3							
20	1	26014-080252	BOLT, M8X 25	6							
21	1	26014-080252	BOLT, M8X 25	7							
22	1	26717-080002	NUT, M8	1							

N:Old ◄Yes/No► New, Q:Old ◄No/Yes► New, R:Old ◄Yes/Yes► New, S:Old ◄No/No► New, W:Add, Z:Discontinued, F:Interchangeable by set, K:Q'ty Change

Copyright (C) 2018 YANMAR CO., LTD. All RightsReserved.

Fig.76. GRAIN ELEVATE AUGER

(A)=AW70GV,RSX(F)-IN (D)=
(B)= (E)=
(C)= (F)=

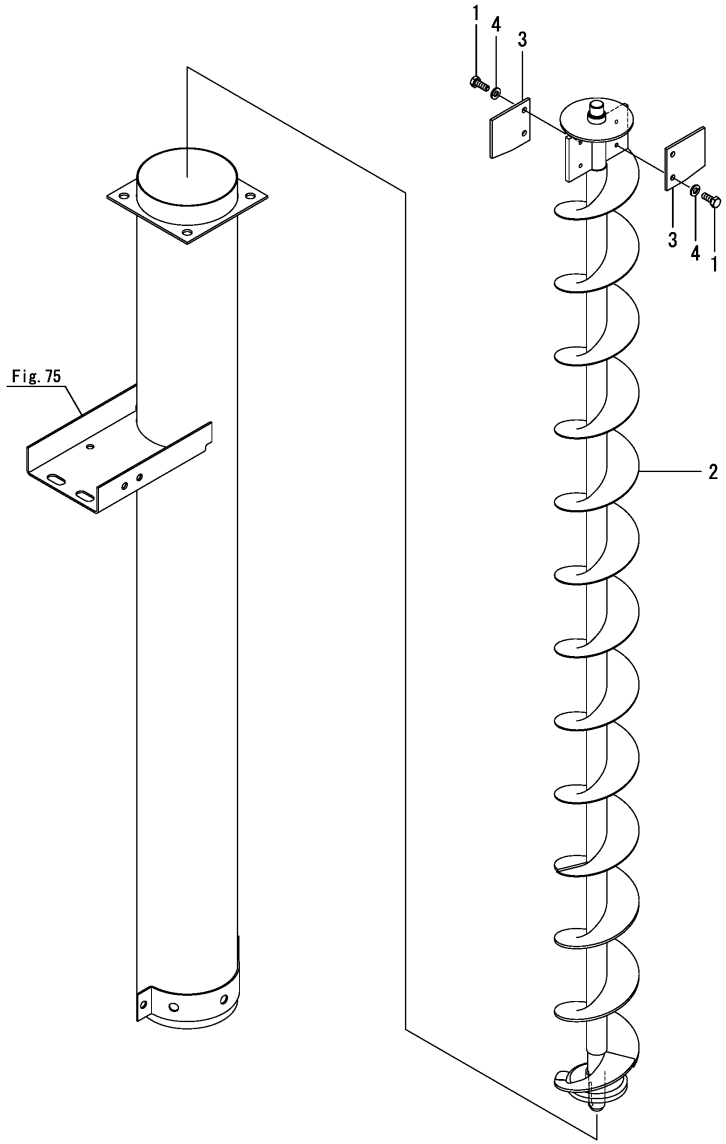

No.	Lev.	Parts No.	Description	Q'ty (A)	(B)	(C)	(D)	(E)	(F)	I	R
1	1	1E8559-35380	BOLT, M6X16 10.9	4							
2	1	1E6B31-45402	CONVEYOR, ELEVATOR	1							
3	1	1E6B31-45471	BLADE,GRAIN ELEVATOR	2							
4	1	22217-060000	WASHER, SPRING 6	4							

N:Old $\xleftrightarrow[\text{No}]{\text{Yes}}$ New, Q:Old $\xleftrightarrow[\text{Yes}]{\text{No}}$ New, R:Old $\xleftrightarrow[\text{Yes}]{\text{Yes}}$ New, S:Old $\xleftrightarrow[\text{No}]{\text{No}}$ New, W:Add, Z:Discontinued, F:Interchangeable by set, K:Q'ty Change

Copyright (C) 2018 YANMAR CO., LTD. All RightsReserved.

Fig.77. THROWER(GRAIN ELEVATE)

(A)=AW70GV,RSX(F)-IN (D)=
(B)= (E)=
(C)= (F)=

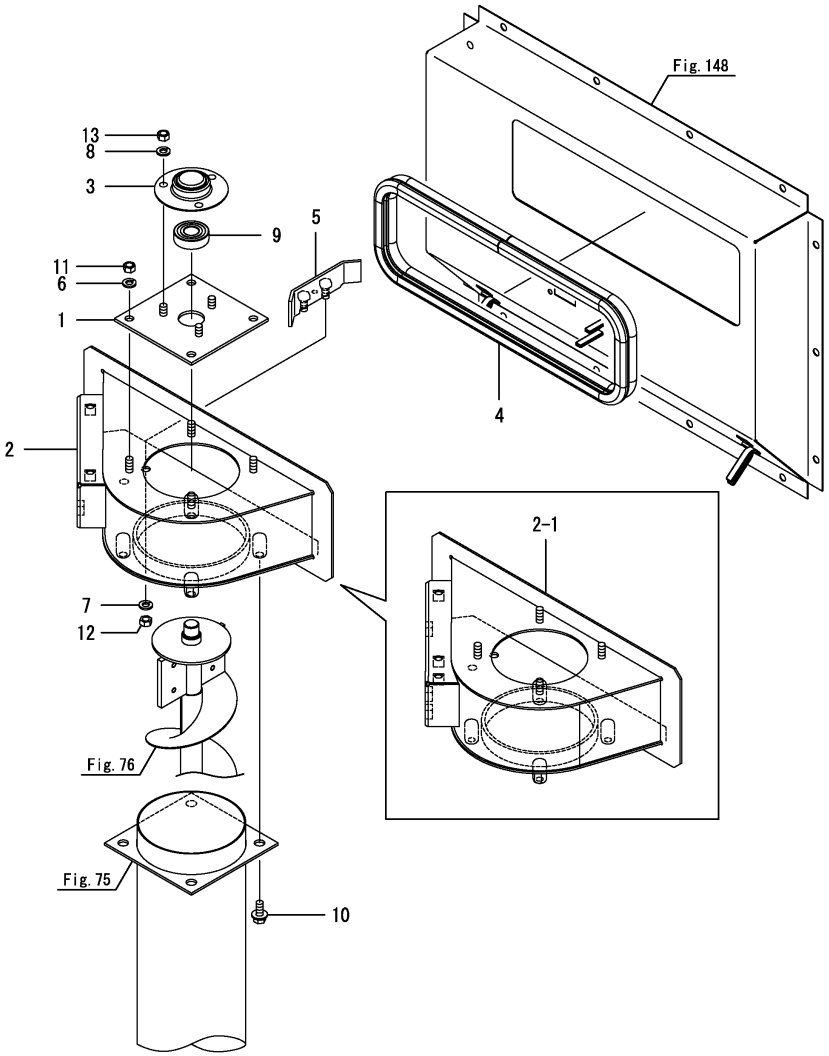

No.	Lev.	Parts No.	Description	Q'ty (A)	(B)	(C)	(D)	(E)	(F)	I	R
1	1	1E6B31-45570	PLATE, THROWER UPPER	1							
2	1	1E6B31-45602	THROWER, PADDY	1							
2-1	1	1E6C43-45600	THROWER,PADDY	1						S	
	(A=F800103)										
3	1	1E6B30-45680	RETAINER, BEARING 40	1							
4	1	1E6B31-45700	SEAL, THROWER	1							
5	1	1E6B31-45900	LEAD ASSY,THROWER 35	1							
5-1	1	1E6B31-45900-1	LEAD ASSY,THROWER 35	1						S	1
	(A=*2018.08)										
6	1	22217-080000	WASHER, SPRING 8	4						Z	
	(A=F800103)										
7	1	22217-080000	WASHER, SPRING 8	2						Z	
	(A=F800103)										
8	1	22217-080000	WASHER, SPRING 8	3						Z	
	(A=F800103)										
9	1	24104-062034	BEARING, BALL 6203UU	1							
10	1	26014-080202	BOLT, M8X 20	4							
11	1	26717-080002	NUT, M8	4							
11-1	1	26367-080002	NUT, M8	4						N	
	(A=F800103)										
12	1	26717-080002	NUT, M8	2							
12-1	1	26367-080002	NUT, M8	2						N	
	(A=F800103)										
13	1	26717-080002	NUT, M8	3							
13-1	1	26367-080002	NUT, M8	3						N	
	(A=F800103)										

Remarks
(1)Painting color=No.5 : YANMAR NAVY GRAY, No.5-1 : CATION E-COATING BLACK.

N:Old $\xleftarrow[\text{No}]{\text{Yes}}$ New, Q:Old $\xleftarrow[\text{Yes}]{\text{No}}$ New, R:Old $\xleftarrow[\text{Yes}]{\text{Yes}}$ New, S:Old $\xleftarrow[\text{No}]{\text{No}}$ New, W:Add, Z:Discontinued, F:Interchangeable by set, K:Q'ty Change

Copyright (C) 2018 YANMAR CO., LTD. All RightsReserved.

Fig.78. BOTTOM PLATE

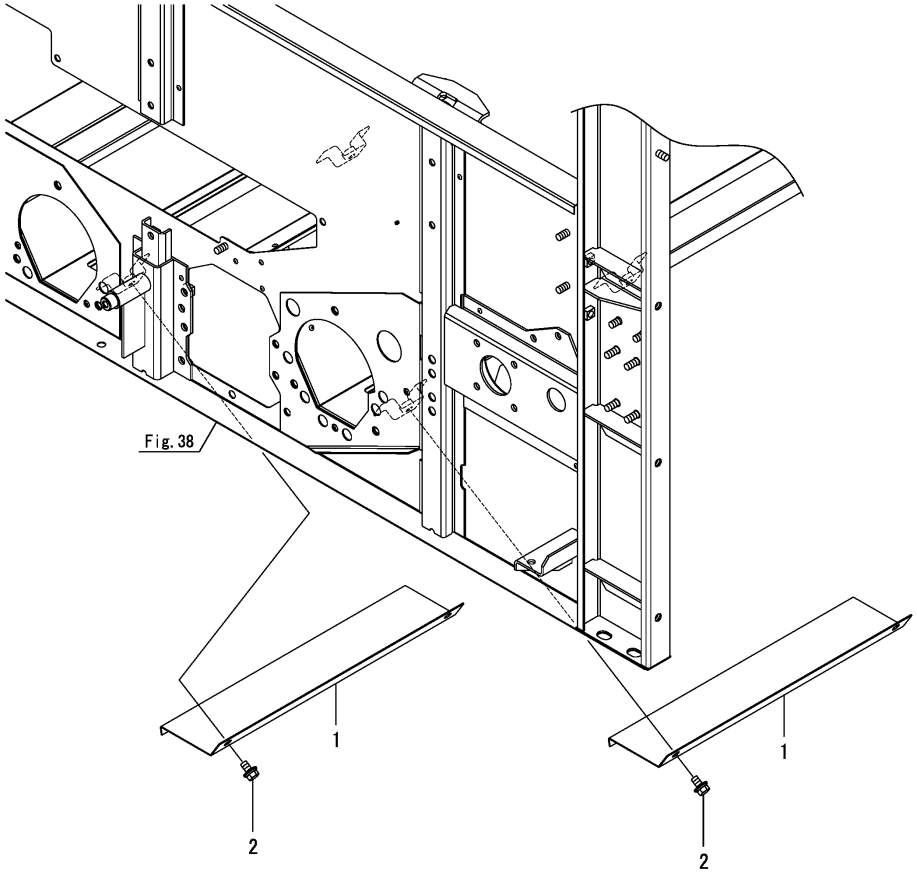

(A)=AW70GV,RSX(F)-IN (D)=
(B)= (E)=
(C)= (F)=

No.	Lev.	Parts No.	Description	Q'ty (A)	(B)	(C)	(D)	(E)	(F)	I	R
1	1	1E6B30-45700-2	COVER, GUTTER	2							
1-1	1 (A=F800063)	1E6C80-45690	COVER ASSY, GUTTER	2						N	
2	1	26014-080162	BOLT, M8X 16	4							

N:Old $\xleftrightarrow[\text{No}]{\text{Yes}}$ New, Q:Old $\xleftrightarrow[\text{Yes}]{\text{No}}$ New, R:Old $\xleftrightarrow[\text{Yes}]{\text{Yes}}$ New, S:Old $\xleftrightarrow[\text{No}]{\text{No}}$ New, W:Add, Z:Discontinued, F:Interchangeable by set, K:Q'ty Change

Copyright (C) 2018 YANMAR CO., LTD. All RightsReserved.

Fig.79. CONVEYOR(2ND)

(A)=AW70GV,RSX(F)-IN (D)=
(B)= (E)=
(C)= (F)=

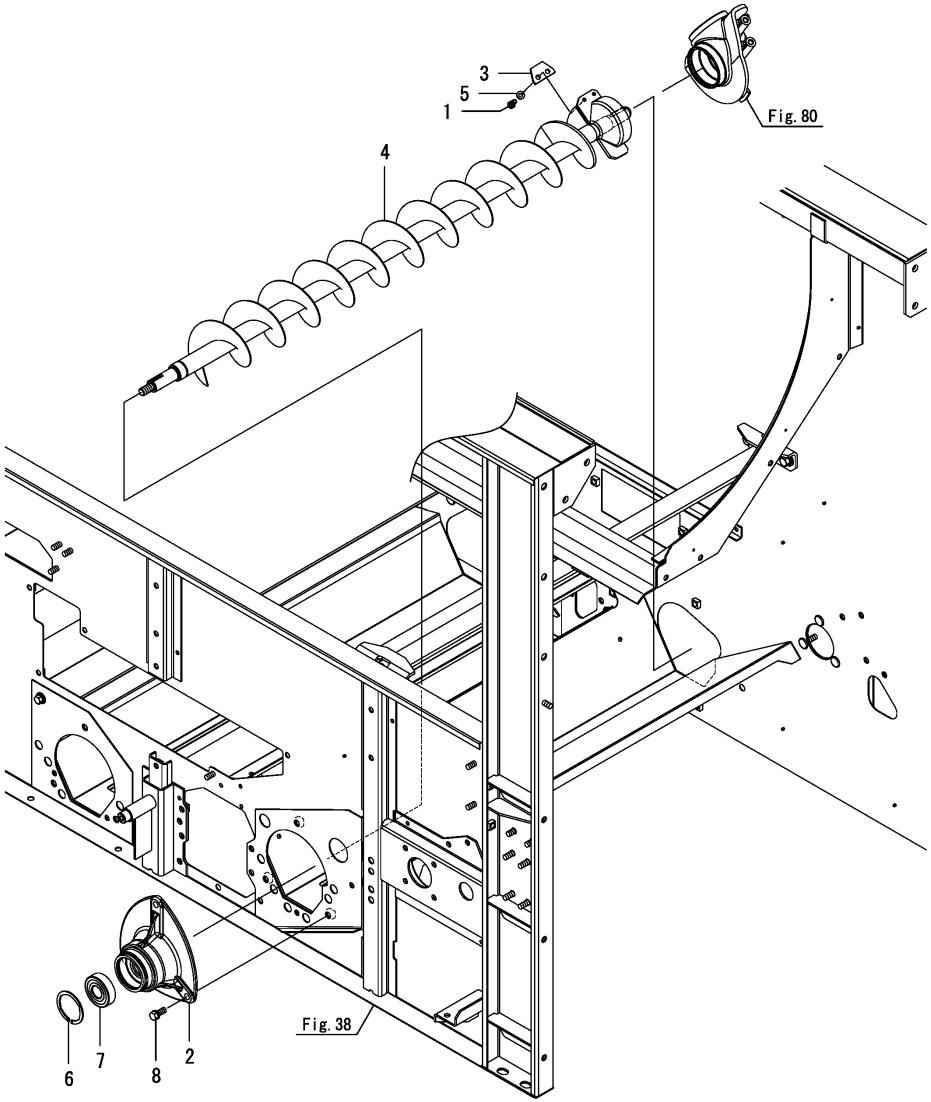

No.	Lev.	Parts No.	Description	Q'ty (A)	(B)	(C)	(D)	(E)	(F)	I	R
1	1	1E8559-35380	BOLT, M6X16 10.9	2							
2	1	1E6B30-45750	METAL, 1ST L	1							
3	1	1E6C80-46090	BLADE, SUCCESSION	1							
3-1	1 (A=F800049)	1E6C80-46091	BLADE, SUCCESSION	1						N	
4	1	7E6C80-46100	CONVEYOR, 2ND-49	1							
5	1	22217-060000	WASHER, SPRING 6	2							
6	1	22252-000521	RING, 52	1							
7	1	24104-063044	BEARING, BALL 6304UU	1							
8	1	26013-080252	BOLT, M8X 25	3							

N:Old $\frac{\text{Yes}}{\text{No}}$ New, Q:Old $\frac{\text{No}}{\text{Yes}}$ New, R:Old $\frac{\text{Yes}}{\text{Yes}}$ New, S:Old $\frac{\text{No}}{\text{No}}$ New, W:Add, Z:Discontinued, F:Interchangeable by set, K:Q'ty Change

Copyright (C) 2018 YANMAR CO., LTD. All RightsReserved.

Fig.80. VERTICAL CONVEYOR CASE(2ND)

(A)=AW70GV,RSX(F)-IN (D)=
(B)= (E)=
(C)= (F)=

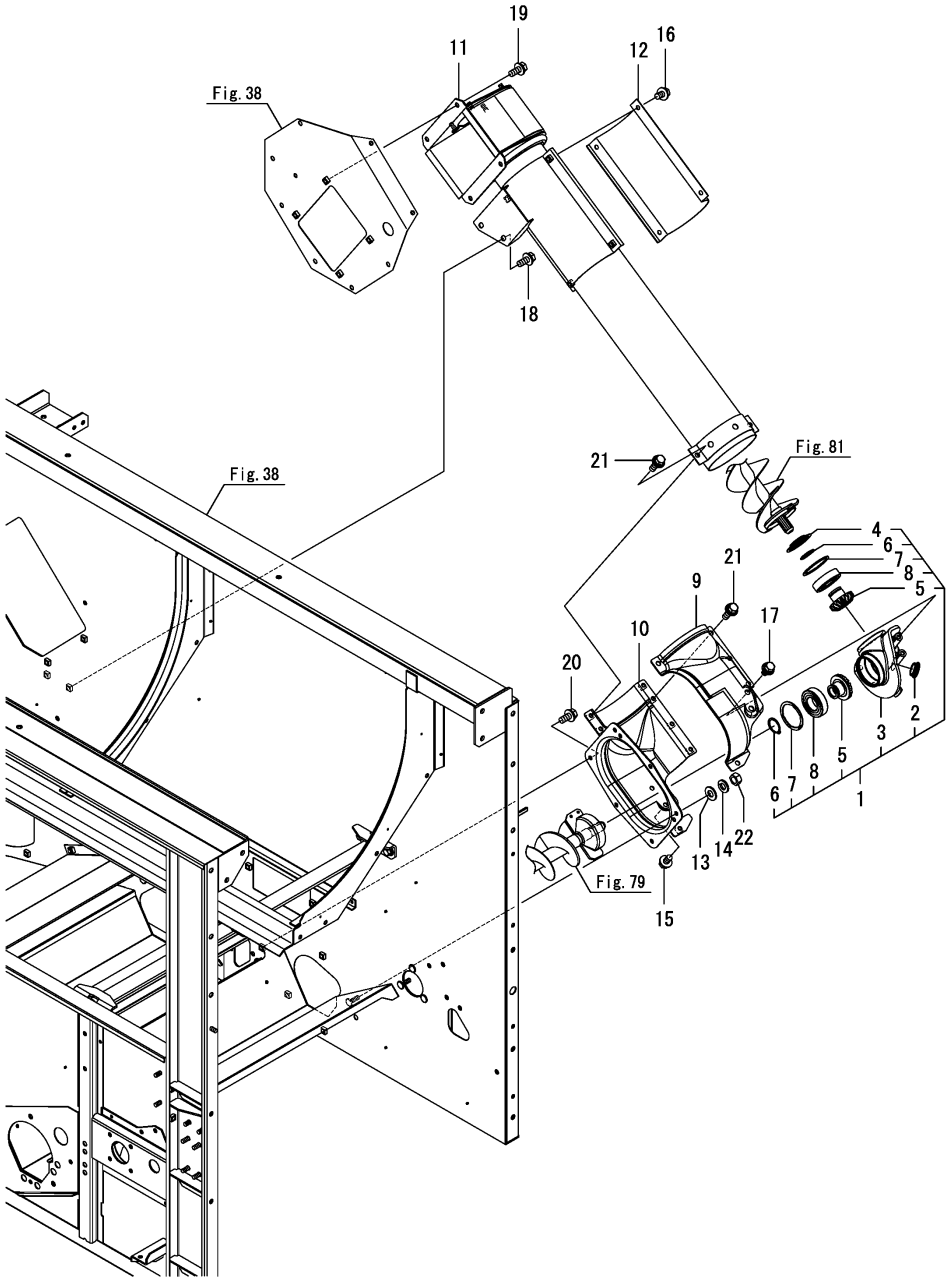

No.	Lev.	Parts No.	Description	Q'ty (A)	(B)	(C)	(D)	(E)	(F)	I	R
1	1	7E6B30-45100-1	CASE ASSY, BEVEL	1							
2	2	1C730C-36280	PLUG, BORE 28	1							
3	2	1E6B30-45104-1	CASE, BEVEL	1							
4	2	1E6B30-45110	SEAL, METAL	1							
5	2	1E6B30-45130	GEAR, BEVEL 17A	2							
6	2	22242-000300	RING, 30	2							
7	2	22252-000621	RING, 62	2							
8	2	24104-062064	BEARING, BALL 6206UU	2							
9	1	1E6B30-45191-1	COVER ASSY, CASE	1							
10	1	1E6B30-45201	CASE, SUCCESSION	1							
11	1	1E6B30-46406	PIPE, VERT. 2ND	1							
11-1	1	1E6B30-46407	PIPE, VERT. 2ND	1						N	
	(A=F800049)										
12	1	1E6B30-46480-1	PIPE, 2ND VERT. B	1							
13	1	22137-080000	WASHER, 8	1							
14	1	22217-080000	WASHER, SPRING 8	1							
15	1	26014-080162	BOLT, M8X 16	2							
16	1	26014-080162	BOLT, M8X 16	4							
17	1	26014-080162	BOLT, M8X 16	2							
18	1	26014-080202	BOLT, M8X 20	2							
19	1	26014-080202	BOLT, M8X 20	4							
20	1	26014-080202	BOLT, M8X 20	5							
21	1	26014-080252	BOLT, M8X 25	7							
22	1	26717-080002	NUT, M8	1							

N:Old $\frac{\text{Yes}}{\text{No}}$ New, Q:Old $\frac{\text{No}}{\text{Yes}}$ New, R:Old $\frac{\text{Yes}}{\text{Yes}}$ New, S:Old $\frac{\text{No}}{\text{No}}$ New, W:Add, Z:Discontinued, F:Interchangeable by set, K:Q'ty Change

Copyright (C) 2018 YANMAR CO., LTD. All RightsReserved.

Fig.81. VERTICAL CONVEYOR(2ND)

(A)=AW70GV,RSX(F)-IN (D)=
(B)= (E)=
(C)= (F)=

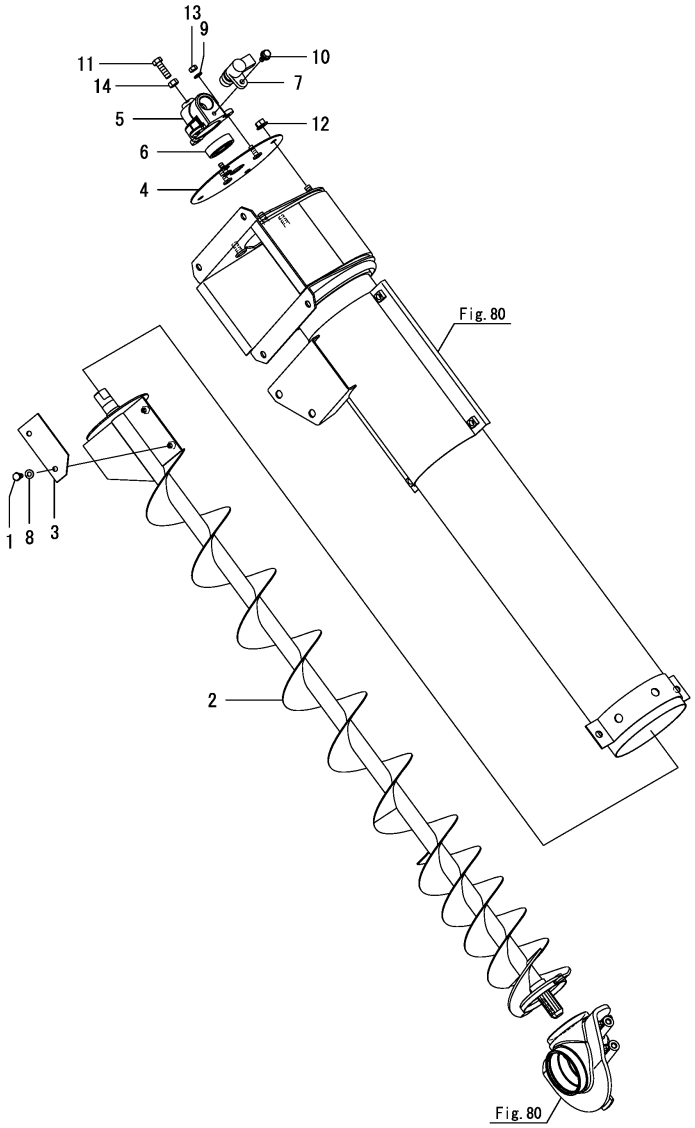

No.	Lev.	Parts No.	Description	Q'ty (A)	(B)	(C)	(D)	(E)	(F)	I	R
1	1	1E8559-35380	BOLT, M6X16 10.9	2							
2	1	7E6C80-46500	CONVEYOR, 2ND VERT.	1							
3	1	1E6B30-46571	BLADE, DIFFUSION 2ND	1							
4	1	1E6B30-46582	PLATE, METAL 2ND	1							
4-1	1	1E6B30-46582-1	PLATE,METAL 2ND	1						S	1
	(A=*2018.08)										
5	1	1E6B30-46600	METAL, 2ND UPPER	1							
6	1	1E6B30-46720	BEARING, 6004UU	1							
7	1	158557-61720	SENSOR, ROTATION	1							
8	1	22217-060000	WASHER, SPRING 6	2							
9	1	22217-060000	WASHER, SPRING 6	3							
10	1	26014-060162	BOLT, M6X 16	1							
11	1	26116-080252	BOLT, M8X 25 PLATED	1							
12	1	26367-080002	NUT, M8	4							
13	1	26717-060002	NUT, M6	3							
14	1	26717-080002	NUT, M8	1							

Remarks
(1)Painting color=No.4 : YANMAR NAVY GRAY, No.4-1 : CATION E-COATING BLACK.

N:Old $\xleftarrow[\text{No}]{\text{Yes}}$ New, Q:Old $\xleftarrow[\text{Yes}]{\text{No}}$ New, R:Old $\xleftarrow[\text{Yes}]{\text{Yes}}$ New, S:Old $\xleftarrow[\text{No}]{\text{No}}$ New, W:Add, Z:Discontinued, F:Interchangeable by set, K:Q'ty Change

Copyright (C) 2018 YANMAR CO., LTD. All RightsReserved.

Fig.82. TRAVEL DRIVE BELT

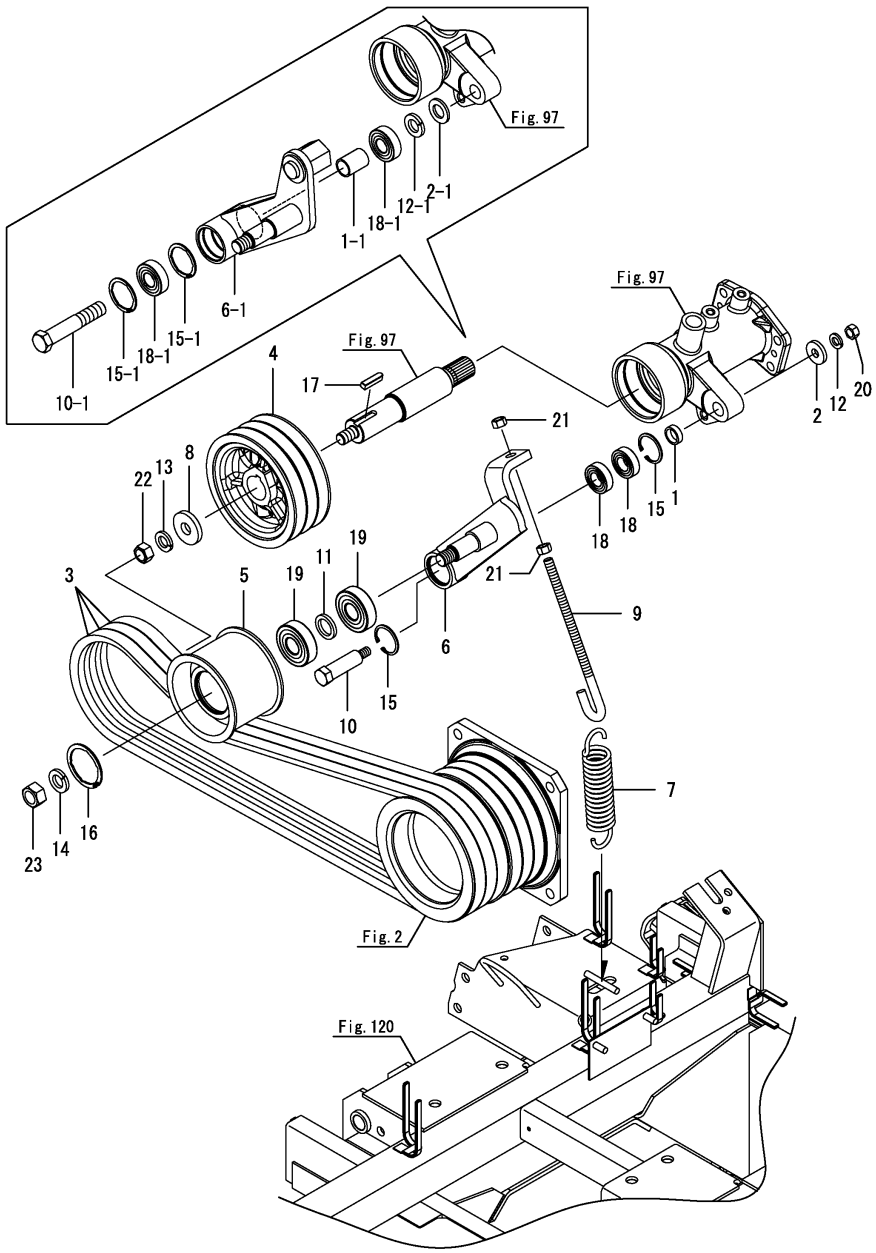

(A)=AW70GV,RSX(F)-IN (D)=
(B)= (E)=
(C)= (F)=

No.	Lev.	Parts No.	Description	Q'ty (A)	(B)	(C)	(D)	(E)	(F)	I	R
1	1	1E8559-24150	COLLAR, 17X22X6.6	1							
1-1	1	1E6C80-51120	COLLAR, 18X22X31	1						F	1
	(A=F800269)										
2	1	1E8559-29130	COLLAR, 10.5X28X4.5	1							
2-1	1	22137-160000	WASHER, 16	1						F	1
	(A=F800269)										
3	1	1E8300-35050	V-BELT, LB58-AG8	3							
4	1	1E6C45-51010	PULLEY, V 142-B3	1							
5	1	1E6B30-51040	ROLLER, 100	1							
6	1	1E6B30-51051-1	ARM,TENSION 120	1							
6-1	1	1E6C43-51050	ARM,S TENSION	1						F	1
	(A=F800269)										
7	1	1E6B30-51151	SPRING, 28X123	1							
8	1	1E9060-51720	WASHER, 15X40X6	1							
9	1	1E6B30-51800	SCREW,TENSION 10X185	1							
10	1	1E6B00-63070	BOLT, FULCRUM M10	1							
10-1	1	1E6C80-51160	BOLT,FULCRUM M16	1						F	1
	(A=F800269)										
11	1	1E8559-73280	COLLAR, 21X30X4	1							
12	1	22217-100000	WASHER, SPRING 10	1							
12-1	1	22217-160000	WASHER, SPRING 16	1						F	1
	(A=F800269)										
13	1	22217-140000	WASHER, SPRING 14	1							
14	1	22217-160000	WASHER, SPRING 16	1							
15	1	22252-000350	RING, 35	2							
15-1	1	22252-000401	RING, 40	2						F	1
	(A=F800269)										
16	1	22252-000521	RING, 52	1							
17	1	22551-070301	KEY 7X30	1							
18	1	24104-060034	BEARING, BALL 6003UU	2							
18-1	1	24104-062034	BEARING, BALL 6203UU	2						F	1
	(A=F800269)										
19	1	24104-063044	BEARING, BALL 6304UU	2							
20	1	26717-100002	NUT, M10	1						Z	1
	(A=F800269)										
21	1	26717-100002	NUT, M10	2							
22	1	26737-140002	NUT, M14	1							
23	1	26737-160002	NUT, M16	1							

Remarks
(1)No.1-1, 2-1, 6-1, 10-1, 12-1, 15-1, 18-1, 20 & Fig.97 No.6-1 interchangeable by set.

N:Old $\xleftrightarrow[\text{No}]{\text{Yes}}$ New, Q:Old $\xleftrightarrow[\text{Yes}]{\text{No}}$ New, R:Old $\xleftrightarrow[\text{Yes}]{\text{Yes}}$ New, S:Old $\xleftrightarrow[\text{No}]{\text{No}}$ New, W:Add, Z:Discontinued, F:Interchangeable by set, K:Q'ty Change

Copyright (C) 2018 YANMAR CO., LTD. All RightsReserved.

Fig.83. THRESH DRIVE BELT

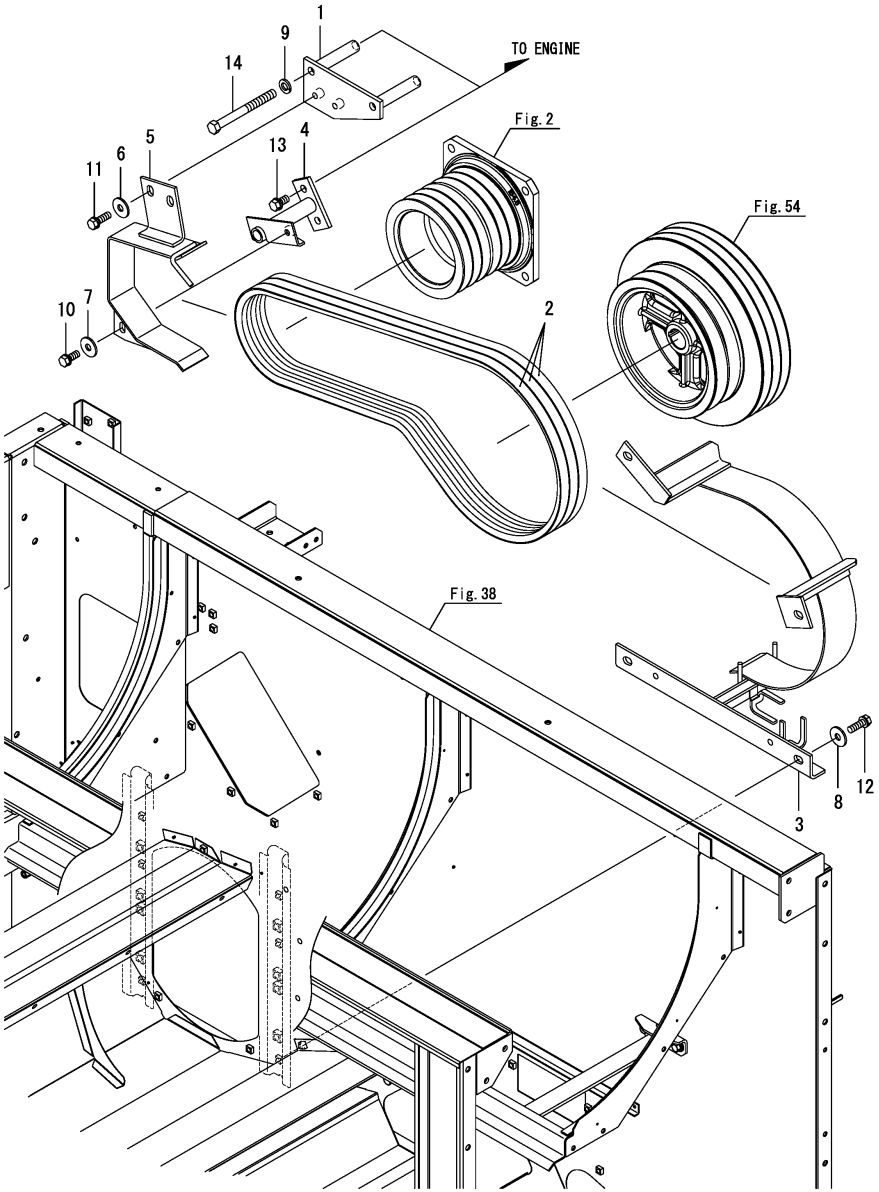

(A)=AW70GV,RSX(F)-IN (D)=
(B)= (E)=
(C)= (F)=

No.	Lev.	Parts No.	Description	Q'ty (A)	(B)	(C)	(D)	(E)	(F)	I	R
1	1	1E6B30-51100	STAY,BELT RETAINER A	1							
1-1	1	1E6B30-51100-1	STAY,BELT RETAINER A	1						S	1
	(A=*2018.08)										
2	1	1E6C80-51340	V-BELT,LB62 AG8	3							
3	1	1E6C80-51501	RETAINER,BELT REAR	1							
3-1	1	1E6C80-51502	RETAINER,BELT REAR	1						N	
	(A=F800049)										
4	1	1E6C80-51600	STAY,BELT RETAINER B	1							
5	1	1E6C80-51700	RETAINER, BELT	1							
5-1	1	1E6C80-51701-1	RETAINER, BELT	1						N	
	(A=F800049)										
6	1	22157-080000	WASHER, 8	2							
7	1	22157-080000	WASHER, 8	1							
8	1	22157-080000	WASHER, 8	4							
9	1	22217-100000	WASHER, SPRING 10	2							
10	1	26013-080202	BOLT, M8X 20	1							
11	1	26013-080252	BOLT, M8X 25	2							
12	1	26013-080252	BOLT, M8X 25	4							
13	1	26013-100202	BOLT, M10X 20	2							
14	1	26116-101002	BOLT, M10X100 PLATED	2							

Remarks
(1)Painting color=No.1 : YANMAR NAVY GRAY, No.1-1 : CATION E-COATING BLACK.

N:Old $\xleftrightarrow[\text{No}]{\text{Yes}}$ New, Q:Old $\xleftrightarrow[\text{Yes}]{\text{No}}$ New, R:Old $\xleftrightarrow[\text{Yes}]{\text{Yes}}$ New, S:Old $\xleftrightarrow[\text{No}]{\text{No}}$ New, W:Add, Z:Discontinued, F:Interchangeable by set, K:Q'ty Change

Copyright (C) 2018 YANMAR CO., LTD. All RightsReserved.

Fig.84. TRANSMISSION CASE

(A)=AW70GV,RSX(F)-IN (D)=
(B)= (E)=
(C)= (F)=

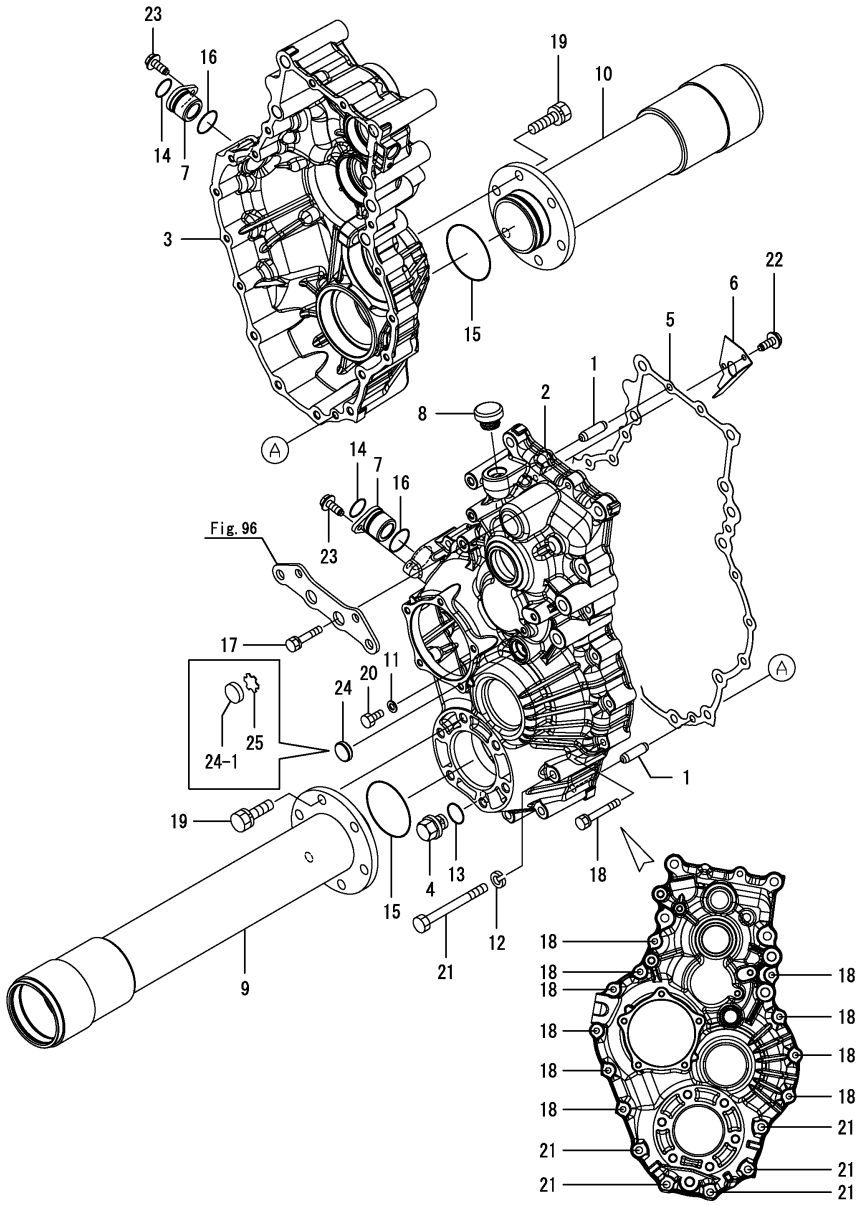

No.	Lev.	Parts No.	Description	Q'ty (A)	(B)	(C)	(D)	(E)	(F)	I	R
1	1	1E8559-11060	PIN, PARALLEL 8X28	2							
2	1	1E6C40-53000	CASE, MISSION L	1							
3	1	1E6B00-53050	CASE, TRANSMISSION R	1							
4	1	1E6B00-53060	BOLT, DRAIN W/MAGNET	1							
5	1	1E9060-53080	GASKET, MISSION CASE	1							
6	1	1E6B00-53090	PLATE, PARTITION	1							
7	1	1E6B00-53350	BUSH, CLUTCH FORK	2							
8	1	1E6B00-53361	COVER, OIL 35	1							
9	1	1E6B30-53600	CASE, AXLE L	1							
10	1	1E6B30-53650	CASE, AXLE R	1							
11	1	22190-080000	WASHER, SEAL 8	1							
12	1	22217-100000	WASHER, SPRING 10	5							
13	1	24311-000160	O-RING, 1AP16.0	1							
14	1	24311-000210	O-RING, 1AP21.0	2							
15	1	24321-000700	O-RING, 1AG70.0	2							
16	1	24351-020280	O-RING 1A 2028	2							
17	1	26013-080402	BOLT, M8X 40	1							
18	1	26013-080552	BOLT, M8X 55	10							
19	1	26013-120402	BOLT, M12X 40	12							
20	1	26116-080162	BOLT, M8X 16 PLATED	1							
21	1	26116-101052	BOLT, M10X105 PLATED	5							
22	1	26476-060142	SCREW, TAPPING M6X14	2							
23	1	26476-060142	SCREW, TAPPING M6X14	2							
24	1	27260-250000	PLUG, 25	1							
24-1	1	198071-24350	PLATE, WINDOW	1						F	1
	(A=F800049)										
25	1	1A6260-24410	WINDOW, OIL CHECK 25	1						W	1
	(A=F800049)										

Remarks
* Transmission Assembly = 7E6C43-50500
(1)No.24-1, 25 interchangeable by set.

N:Old $\frac{\text{Yes}}{\text{No}}$ New, Q:Old $\frac{\text{No}}{\text{Yes}}$ New, R:Old $\frac{\text{Yes}}{\text{Yes}}$ New, S:Old $\frac{\text{No}}{\text{No}}$ New, W:Add, Z:Discontinued, F:Interchangeable by set, K:Q'ty Change

Copyright (C) 2018 YANMAR CO., LTD. All RightsReserved.

Fig.85. PARKING BRAKE

(A)=AW70GV,RSX(F)-IN (D)=
(B)= (E)=
(C)= (F)=

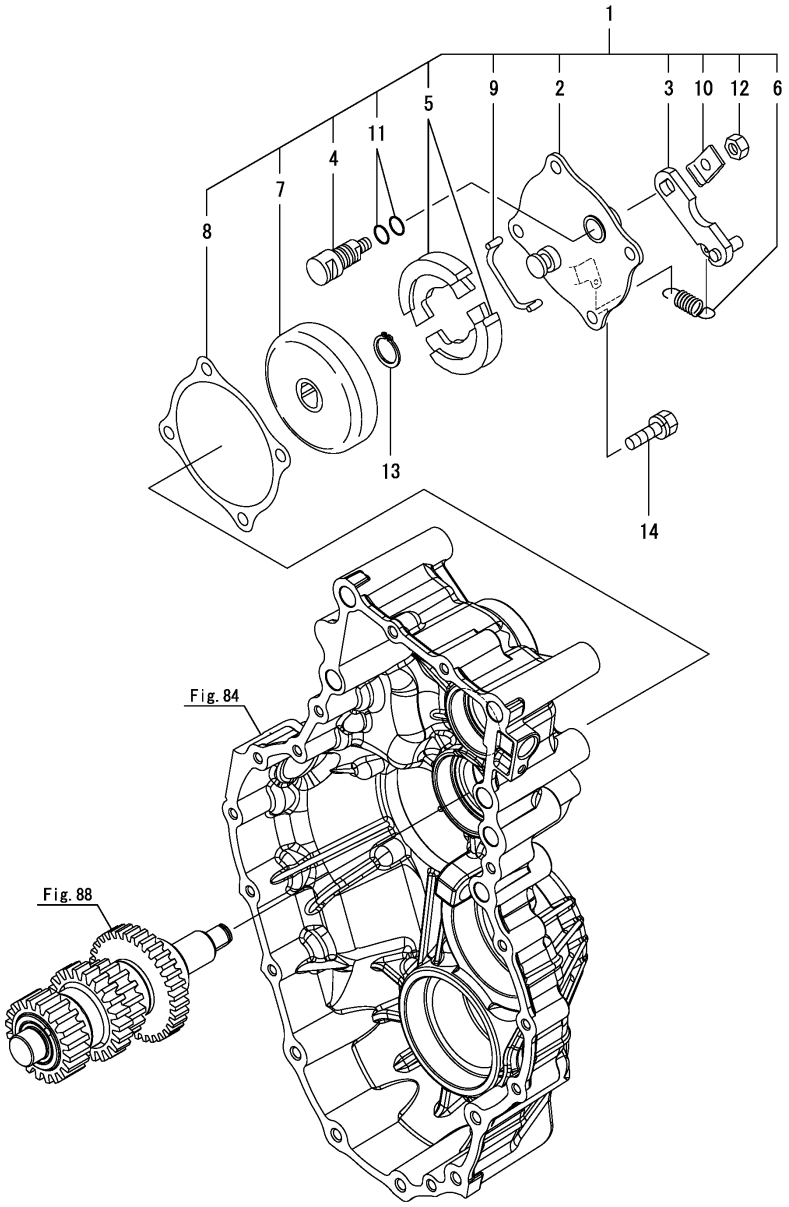

No.	Lev.	Parts No.	Description	Q'ty (A)	(B)	(C)	(D)	(E)	(F)	I	R
1	1	1E8440-52013	BRAKE ASSY, PARKING	1							
2	2	1E8440-52020	COVER ASSY, BRAKE	1							
3	2	1E8235-52050	LEVER ASSY, CAM	1							
4	2	1E8235-52090	CAMSHAFT	1							
5	2	1E6480-52141	SHOE, BRAKE	2							
6	2	1E8235-52210	SPRING, 10X42	1							
7	2	1E8050-52230	DRUM, BRAKE	1							
8	2	1E9060-52280	PACKING, BRAKE COVER	1							
9	2	1E6192-53660	SPRING, SHOE RETURN	1							
10	2	1E6650-54850	WASHER, LOCK	1							
11	2	24341-000125	O-RING, 1AS12.5	2							
12	2	26716-080002	NUT, M8	1							
13	1	22242-000180	RING, 18	1							
14	1	26013-080302	BOLT, M8X 30	4							

N:Old $\frac{\text{Yes}}{\text{No}}$ New, Q:Old $\frac{\text{No}}{\text{Yes}}$ New, R:Old $\frac{\text{Yes}}{\text{Yes}}$ New, S:Old $\frac{\text{No}}{\text{No}}$ New, W:Add, Z:Discontinued, F:Interchangeable by set, K:Q'ty Change

Copyright (C) 2018 YANMAR CO., LTD. All RightsReserved.

Fig.86. SIDE BRAKE

(A)=AW70GV,RSX(F)-IN
(B)=
(C)=
(D)=
(E)=
(F)=

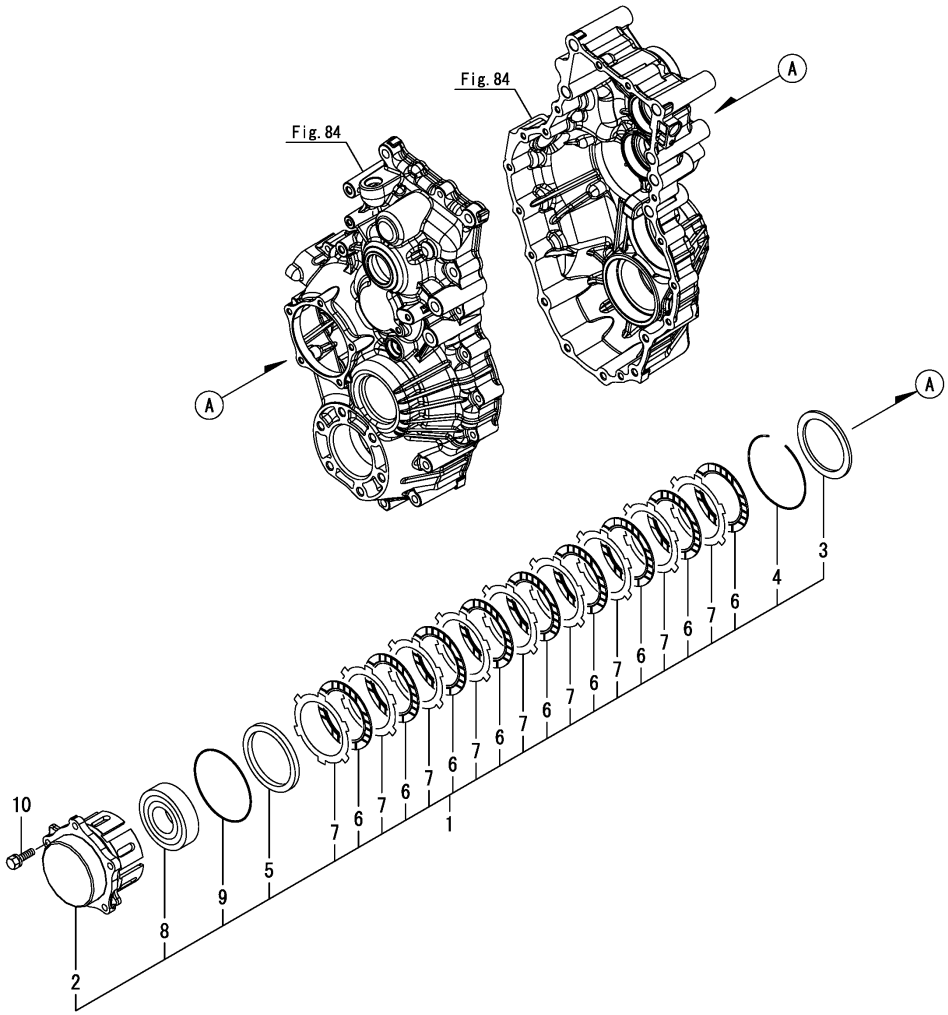

No.	Lev.	Parts No.	Description	Q'ty (A)	(B)	(C)	(D)	(E)	(F)	I	R
1	1	7E6C40-52550	CASE ASSY, SIDE	2							
2	2	1E6B30-52410	CASE, SIDE BRAKE	2							
3	2	1E6B30-52450	PLATE, PRESSURE	2							
4	2	1E6B00-52460	CIRCLIP, 98	2							
5	2	1E6B00-52480	PLATE, PRESSURE B	2							
6	2	1E6C40-52910	PLATE,FRICTION	18							
7	2	1E6B30-55110	PLATE, STEEL 2.0	18							
8	2	1E6C40-55550	BEARING, 6307H	2							
9	2	24321-000950	O-RING, 1AG95.0	2							
10	1	26013-080302	BOLT, M8X 30	10							

N:Old $\frac{\text{Yes}}{\text{No}}$ New, Q:Old $\frac{\text{No}}{\text{Yes}}$ New, R:Old $\frac{\text{Yes}}{\text{Yes}}$ New, S:Old $\frac{\text{No}}{\text{No}}$ New, W:Add, Z:Discontinued, F:Interchangeable by set, K:Q'ty Change

Copyright (C) 2018 YANMAR CO., LTD. All RightsReserved.

Fig.87. SHIFT SHAFT

(A)=AW70GV,RSX(F)-IN (D)=
(B)= (E)=
(C)= (F)=

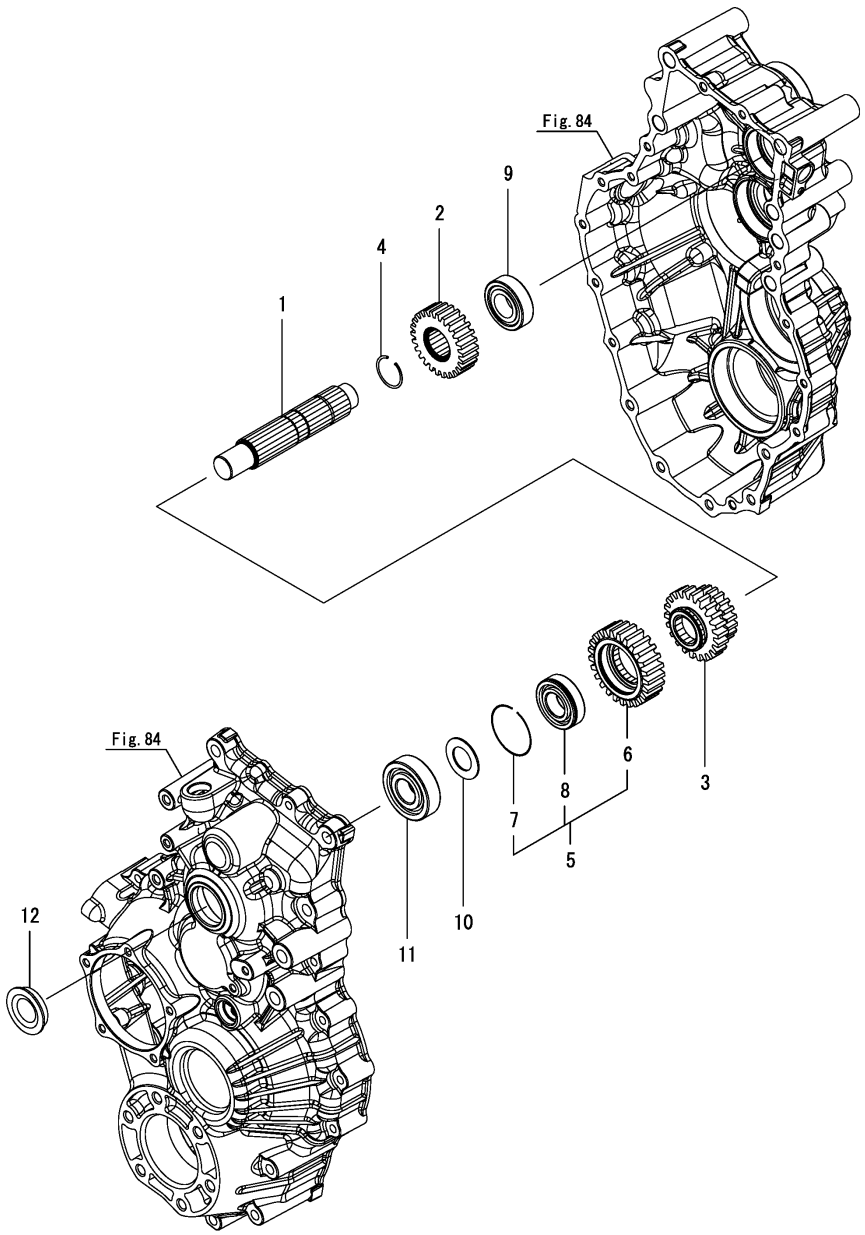

No.	Lev.	Parts No.	Description	Q'ty (A)	(B)	(C)	(D)	(E)	(F)	I	R
1	1	1E6B30-54411	SHAFT, CHANGE	1							
2	1	1E6B00-54420	GEAR, 26	1							
3	1	1E6B30-54430	GEAR, 22-20	1							
4	1	1E6B00-54440	CIRCLIP, 31.7X2.3	1							
5	1	1E6B30-54440	GEAR ASSY, 25	1							
6	2	1E6B30-54450	GEAR, 25	1							
7	2	1C728C-54470	RING, SNAP 52	1							
8	2	1E9060-54480	BEARING, 6205RNSH2	1							
9	1	1E9060-54490	BEARING, NJ205E	1							
10	1	1E6B00-54560	LINER, 25X38X1.6	1							
11	1	1E8379-54580	BEARING, 6305RSH2	1							
12	1	27260-420002	PLUG, 42	1							

N:Old $\xleftrightarrow[\text{No}]{\text{Yes}}$ New, Q:Old $\xleftrightarrow[\text{Yes}]{\text{No}}$ New, R:Old $\xleftrightarrow[\text{Yes}]{\text{Yes}}$ New, S:Old $\xleftrightarrow[\text{No}]{\text{No}}$ New, W:Add, Z:Discontinued, F:Interchangeable by set, K:Q'ty Change

Copyright (C) 2018 YANMAR CO., LTD. All RightsReserved.

Fig.88. BRAKE SHAFT

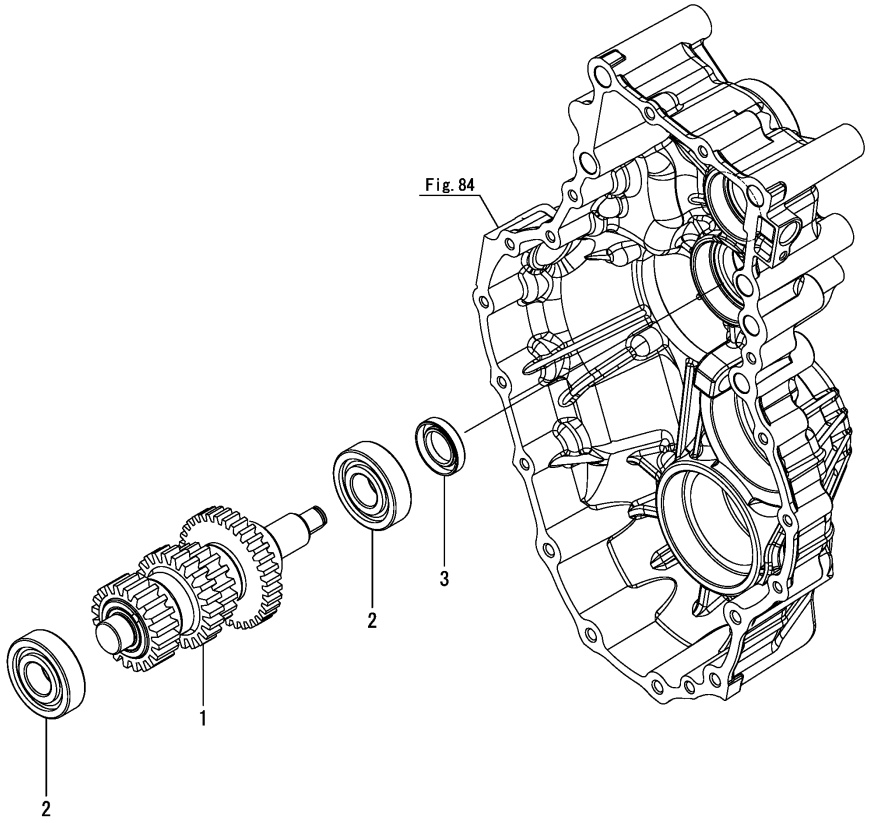

(A)=AW70GV,RSX(F)-IN (D)=
(B)= (E)=
(C)= (F)=

No.	Lev.	Parts No.	Description	Q'ty (A)	(B)	(C)	(D)	(E)	(F)	I	R
1	1	1E6B30-54500	SHAFT ASSY, BRAKE	1							
2	1	1E8379-54580	BEARING, 6305RSH2	2							
3	1	24423-254208	SEAL, OIL TC254208	1							

N:Old $\overset{\text{Yes}}{\underset{\text{No}}{\rightleftarrows}}$ New, Q:Old $\overset{\text{No}}{\underset{\text{Yes}}{\rightleftarrows}}$ New, R:Old $\overset{\text{Yes}}{\underset{\text{Yes}}{\rightleftarrows}}$ New, S:Old $\overset{\text{No}}{\underset{\text{No}}{\rightleftarrows}}$ New, W:Add, Z:Discontinued, F:Interchangeable by set, K:Q'ty Change

Copyright (C) 2018 YANMAR CO., LTD. All RightsReserved.

Fig.89. SIDE CLUTCH SHAFT

(A)=AW70GV,RSX(F)-IN (D)=
(B)= (E)=
(C)= (F)=

No.	Lev.	Parts No.	Description	Q'ty (A)	(B)	(C)	(D)	(E)	(F)	I	R
1	1	1E6B00-55110	LINER, 35.5X52X2	4							
2	1	7E6B30-55120	SHAFT ASSY,SD CLUTCH	1							
3	2	1E6B30-55030	GEAR, SIDE CLUTCH 54	1							
3-1	2	1E6C43-55030	GEAR,SD.CLUTCH 54	1						N	
	(A=F800157)										
4	2	1E6B00-55090	CIRCLIP, 46.6	2							
5	2	1E6B30-55121	SHAFT, SIDE CLUTCH	1							
6	1	1E6B30-55150	SPRING,SIDE CLUTCH	2							
7	1	7E6B30-55300	GEAR ASSY, SD.CLUTCH	2							
8	2	1E6B00-55140	RING, 62X3.5	2							
9	2	1E6B30-55300	GEAR ASSY, CLUTCH	2							
10	1	22242-000350	RING, 35	2							

Copyright (C) 2018 YANMAR CO., LTD. All RightsReserved.

Fig.90. REDUCTION SHAFT

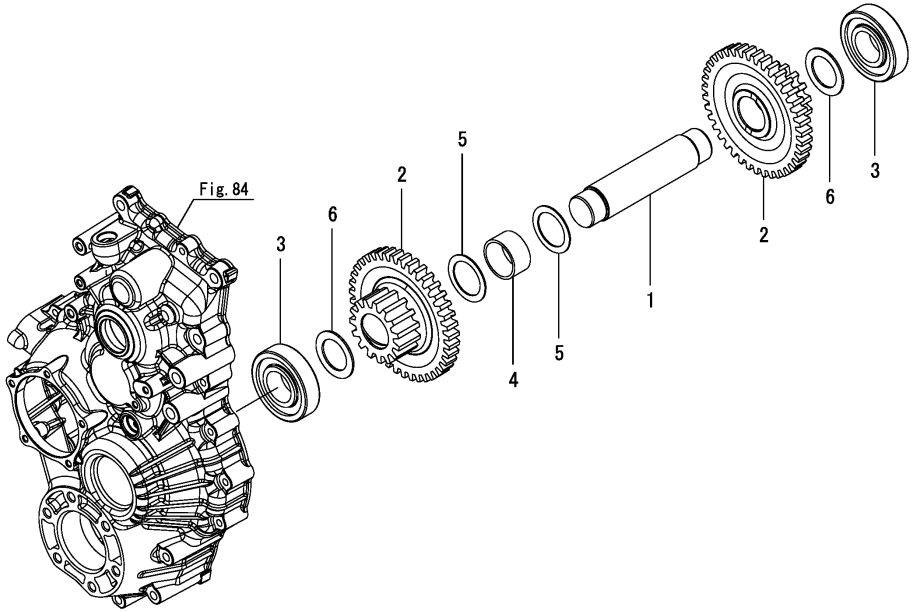

(A)=AW70GV,RSX(F)-IN (D)=
(B)= (E)=
(C)= (F)=

No.	Lev.	Parts No.	Description	Q'ty (A)	(B)	(C)	(D)	(E)	(F)	I	R
1	1	1E6B30-55210	SHAFT, REDUCTION	1							
2	1	1E6B30-55221	GEAR,REDUCTION 15X39	2							
3	1	1E8450-55230	BEARING, NJ308E	2							
4	1	1E6B30-55260	COLLAR, 44X51X25.8	1							
5	1	1E6B30-55270	COLLAR, 44X60X1.6	2							
6	1	1E6B00-55380	WASHER, 40X60X2.3	2							

N:Old $\xleftrightarrow[\text{No}]{\text{Yes}}$ New, Q:Old $\xleftrightarrow[\text{Yes}]{\text{No}}$ New, R:Old $\xleftrightarrow[\text{Yes}]{\text{Yes}}$ New, S:Old $\xleftrightarrow[\text{No}]{\text{No}}$ New, W:Add, Z:Discontinued, F:Interchangeable by set, K:Q'ty Change

Copyright (C) 2018 YANMAR CO., LTD. All RightsReserved.

Fig.91. AXLE SHAFT

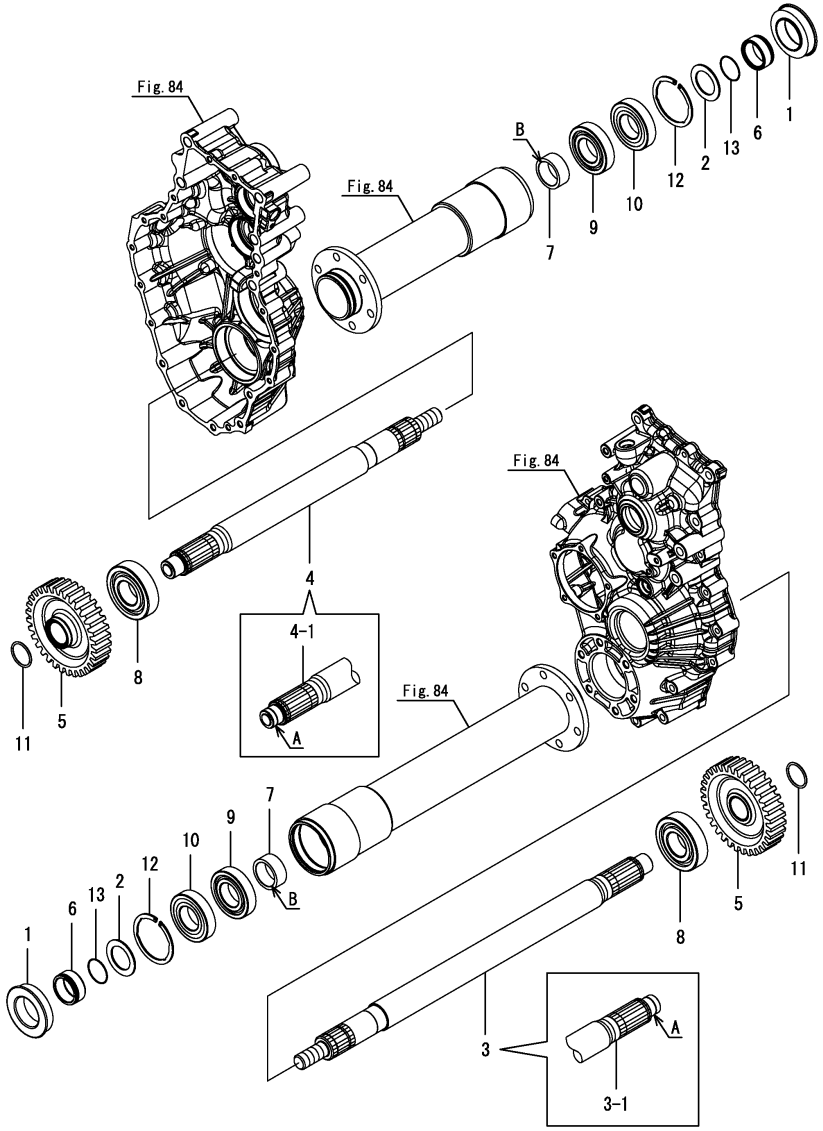

Remarks
(1)No.3-1, 4-1 & 7-1 interchangeable by set.
A : With identification marking.
B : No.7 : C0.5mm, No.7-1 : R0.8mm.

(A)=AW70GV,RSX(F)-IN (D)=
(B)= (E)=
(C)= (F)=

No.	Lev.	Parts No.	Description	Q'ty (A)	(B)	(C)	(D)	(E)	(F)	I	R
1	1	1B1604-14840	SEAL, QLFY508014.5	2							
2	1	1E6B00-55380	WASHER, 40X60X2.3	2							
3	1	1E6C40-55410	SHAFT,AXLE L	1							
3-1	1	1E6C40-55411	SHAFT,AXLE L	1						F	1
	(A=F800049)										
4	1	1E6C40-55420	SHAFT,AXLE R	1							
4-1	1	1E6C40-55421	SHAFT,AXLE R	1						F	1
	(A=F800049)										
5	1	1E6B30-55430	GEAR, FINAL 32	2							
6	1	1E6B00-55450	COLLAR,SEAL 40X50X21	2							
7	1	1E6B00-55470	PIPE, 40X50X21	2							
7-1	1	1E6C43-55470	COLLAR, 40X50X21	2						F	1
	(A=F800049)										
8	1	1E9060-55490	BEARING, 6308RSH2	2							
9	1	1E9060-55560	BEARING, 6208 SH2	2							
10	1	1E9060-55570	BEARING, 6208 RSSH2	2							
11	1	22207-040320	RING, 40X3.2	2							
12	1	22252-000801	CIRCLIP 80-H	2							
13	1	24341-000400	O-RING, 1AS40.0	2							

N:Old $\frac{\text{Yes}}{\text{No}}$ New, Q:Old $\frac{\text{No}}{\text{Yes}}$ New, R:Old $\frac{\text{Yes}}{\text{Yes}}$ New, S:Old $\frac{\text{No}}{\text{No}}$ New, W:Add, Z:Discontinued, F:Interchangeable by set, K:Q'ty Change

Copyright (C) 2018 YANMAR CO., LTD. All RightsReserved.

Fig.92. SUB SHIFT

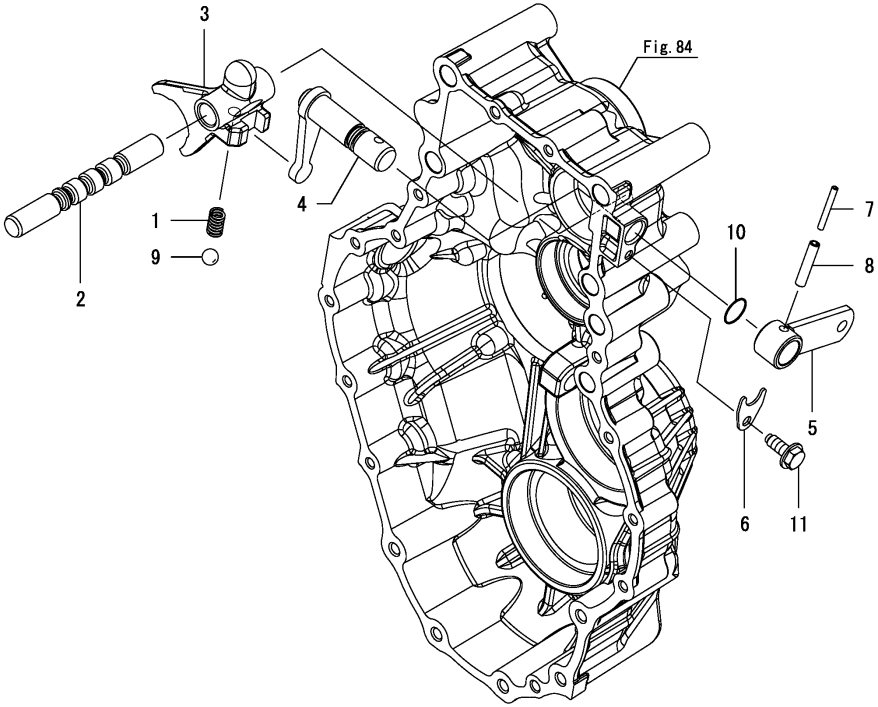

(A)=AW70GV,RSX(F)-IN (D)=
(B)= (E)=
(C)= (F)=

No.	Lev.	Parts No.	Description	Q'ty (A)	(B)	(C)	(D)	(E)	(F)	I	R
1	1	1E8809-13010	SPRING, FORK	1							
2	1	1E6B00-56110	SHAFT, CHANGE FORK	1							
3	1	1E6B00-56120	FORK, SUB CHANGE	1							
3-1	1	1E9063-56120	FORK, SUB SHIFT	1						R	
	(A=*2017.12)										
4	1	1E6B00-56130	SHIFTER ASSY, CHANGE	1							
5	1	1E6B00-56200	ARM ASSY, SUB CHANGE	1							
6	1	1E6B00-62350	STOPPER, SHAFT	1							
7	1	22351-035032	PIN, SPRING 3.5X32	1							
8	1	22351-060032	PIN, SPRING 6.0X32	1							
9	1	24190-100002	BALL, STEEL 5/16	1							
10	1	24311-000140	O-RING, 1AP14.0	1							
11	1	26476-060142	SCREW, TAPPING M6X14	1							

N:Old $\overset{\text{Yes}}{\underset{\text{No}}{\leftrightarrows}}$ New, Q:Old $\overset{\text{No}}{\underset{\text{Yes}}{\leftrightarrows}}$ New, R:Old $\overset{\text{Yes}}{\underset{\text{Yes}}{\leftrightarrows}}$ New, S:Old $\overset{\text{No}}{\underset{\text{No}}{\leftrightarrows}}$ New, W:Add, Z:Discontinued, F:Interchangeable by set, K:Q'ty Change

Copyright (C) 2018 YANMAR CO., LTD. All RightsReserved.

Fig.93. SIDE CLUTCH

(A)=AW70GV,RSX(F)-IN (D)=
(B)= (E)=
(C)= (F)=

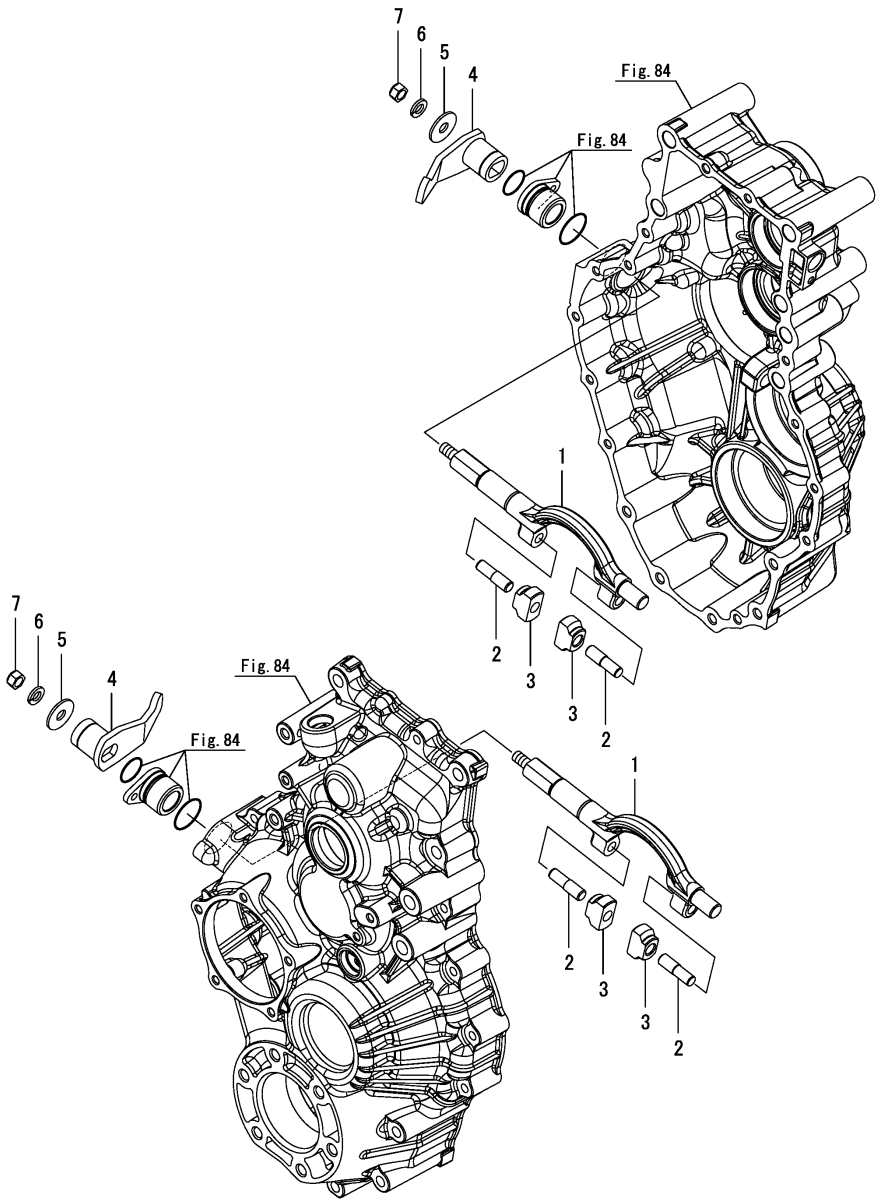

No.	Lev.	Parts No.	Description	Q'ty (A)	(B)	(C)	(D)	(E)	(F)	I	R
1	1	1E6B00-56300	FORK, SIDE CLUTCH	2							
2	1	1E6B00-56310	PIN, PRESSURE	4							
3	1	1E9063-56320	SLIDER, FORK	4							
4	1	1E6B00-56400	LEVER ASSY, CLUTCH	2							
5	1	22157-100000	WASHER, 10	2							
6	1	22217-100000	WASHER, SPRING 10	2							
7	1	26346-100002	NUT, M10	2							

N:Old $\xleftarrow[\text{No}]{\text{Yes}}$ New, Q:Old $\xleftarrow[\text{Yes}]{\text{No}}$ New, R:Old $\xleftarrow[\text{Yes}]{\text{Yes}}$ New, S:Old $\xleftarrow[\text{No}]{\text{No}}$ New, W:Add, Z:Discontinued, F:Interchangeable by set, K:Q'ty Change

Copyright (C) 2018 YANMAR CO., LTD. All RightsReserved.

Fig.94. H.S.T.

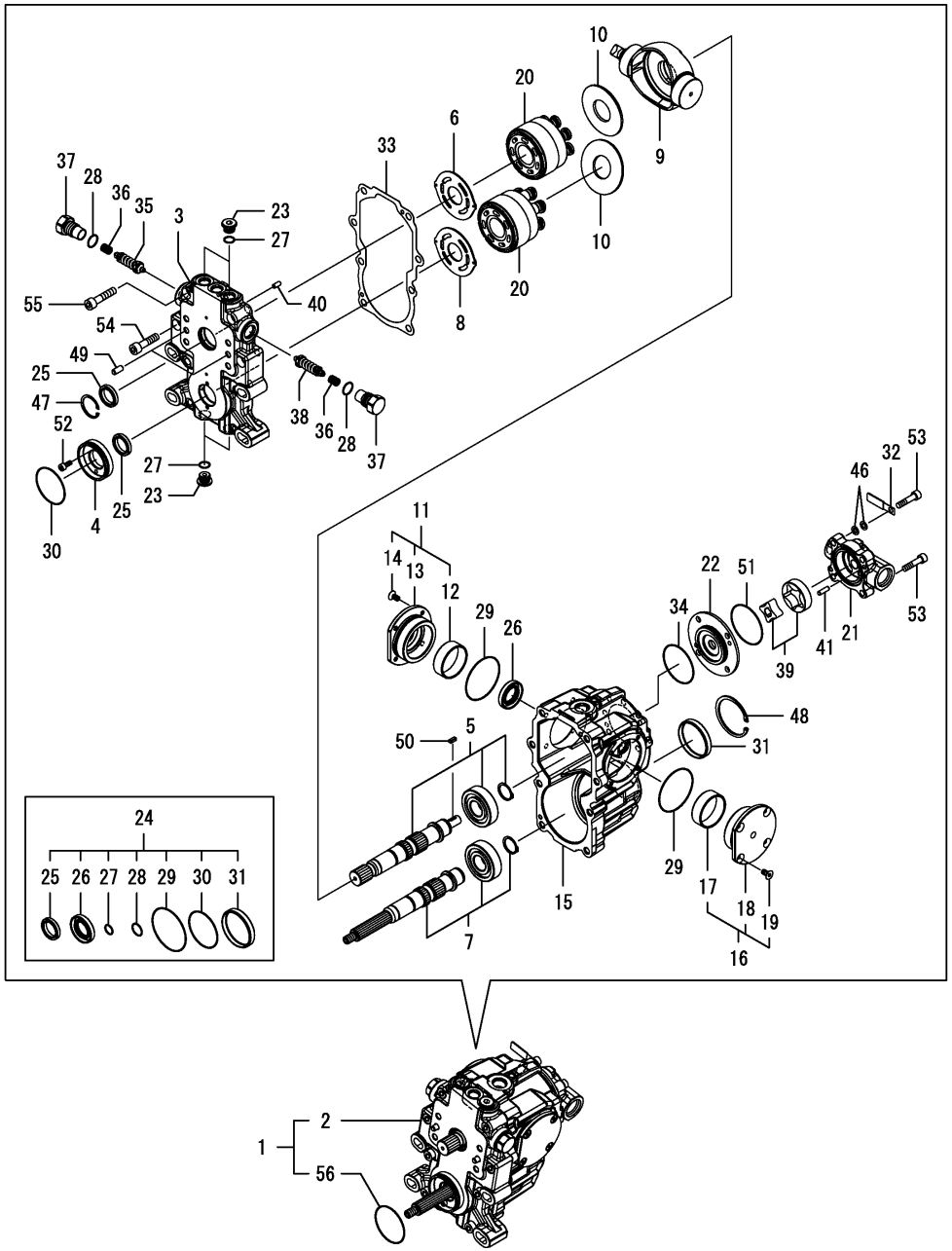

(A)=AW70GV,RSX(F)-IN (D)=
(B)= (E)=
(C)= (F)=

No.	Lev.	Parts No.	Description	Q'ty (A)	(B)	(C)	(D)	(E)	(F)	I	R
1	1	7E6C45-52600	HST ASSY, 30CC	1							
2	2	168HM7-29020	HST ASSY , MT-30UD1	1							
3	3	168HN6-29100	CASE ASSY, CENTER	1							
4	3	168HM6-29190	COVER, SEAL	1							
5	3	168HN5-29200	SHAFT ASSY, PUMP	1							
6	3	168HN6-29250	PLATE, VALVE P	1							
7	3	168HM4-29320	MOTOR SHAFT (2) CMP	1							
8	3	168HN6-29350	PLATE, VALVE M	1							
9	3	168HN6-29410	PLATE, SWASH T	1							
10	3	168HM6-29420	THRUST PLATE	2							
11	3	168HN6-29450	COVER ASSY, A	1							
12	4	168PHB-11750	BUSH, 50X55X18	1							
13	4	168HN6-29370	COVER, A	1							
14	4	168H8S-29540	BOLT, M6X12	4							
15	3	168HN5-29510	HOUSING	1							
16	3	168HN6-29520	COVER ASSY, B	1							
17	4	168PHB-11750	BUSH, 50X55X18	1							
18	4	168HN6-29380	COVER, B	1							
19	4	168H8S-29540	BOLT, M6X12	4							
20	3	168HM4-29610	CYLINDER ASSY, BLOCK	2							
21	3	168HN5-29810	HOUSING(CHARGE PUMP)	1							
22	3	168HM6-29820	SPACER, CHARGE	1							
23	3	1A6750-29850	PLUG, G3/8	4							
24	3	168HM7-29910	SEAL KIT	1							
25	4	168HM7-29180	SEAL, TCV253506FKM	2							
26	4	158805-85420	SEAL, OIL 25X45X8	1							
27	4	24315-000140	O-RING, 1BP14.0	4							
28	4	24315-000180	O-RING, 1BP18.0	2							
29	4	24321-000650	O-RING, 1AG65.0	2							
30	4	24341-000550	O-RING, 1AS55.0	1							
31	4	27260-620000	PLUG, 62	1							
32	3	1E8460-56640	CLAMP	1							
33	3	168HJ1-85031	PACKING, HOUSING	1							
34	3	168HJ1-85490	O-RING, S58.2	1							
35	3	158856-85502	VALVE ASSY, RELIEF	1							
36	3	168HP1-85570	SPRING, CHECK VALVE	2							
37	3	158856-85580	PLUG, PE1/2A	2							
38	3	158856-85702	VALVE ASSY, RELIEF	1							
39	3	158850-85810	PUMP	1							
40	3	158802-85880	PIN,PARALLEL(6X12	2							
41	3	158802-85890	PIN, PARALLEL 6X18	2							
46	3	22190-080002	WASHER, SEAL 8	2							
47	3	22252-000360	RING, 36	1							
48	3	22252-000650	RING, 65	1							
49	3	22312-080160	PIN, PARALLEL M8X16	2							
50	3	22551-040100	KEY, 4X 10	1							
51	3	24321-000600	O-RING, 1AG60.0	1							
52	3	26450-050122	BOLT, M5X 12	2							
53	3	26450-080352	BOLT, M8X 35	4							
54	3	26450-100402	BOLT, M10X 40	2							
55	3	26450-100452	BOLT, M10X 45	6							

N:Old $\overset{\text{Yes}}{\underset{\text{No}}{\leftrightarrow}}$ New, Q:Old $\overset{\text{No}}{\underset{\text{Yes}}{\leftrightarrow}}$ New, R:Old $\overset{\text{Yes}}{\underset{\text{Yes}}{\leftrightarrow}}$ New, S:Old $\overset{\text{No}}{\underset{\text{No}}{\leftrightarrow}}$ New, W:Add, Z:Discontinued, F:Interchangeable by set, K:Q'ty Change

++ CONTINUE ++

Copyright (C) 2018 YANMAR CO., LTD. All RightsReserved.

Fig.94. H.S.T.

(A)=AW70GV,RSX(F)-IN
(B)=
(C)=
(D)=
(E)=
(F)=

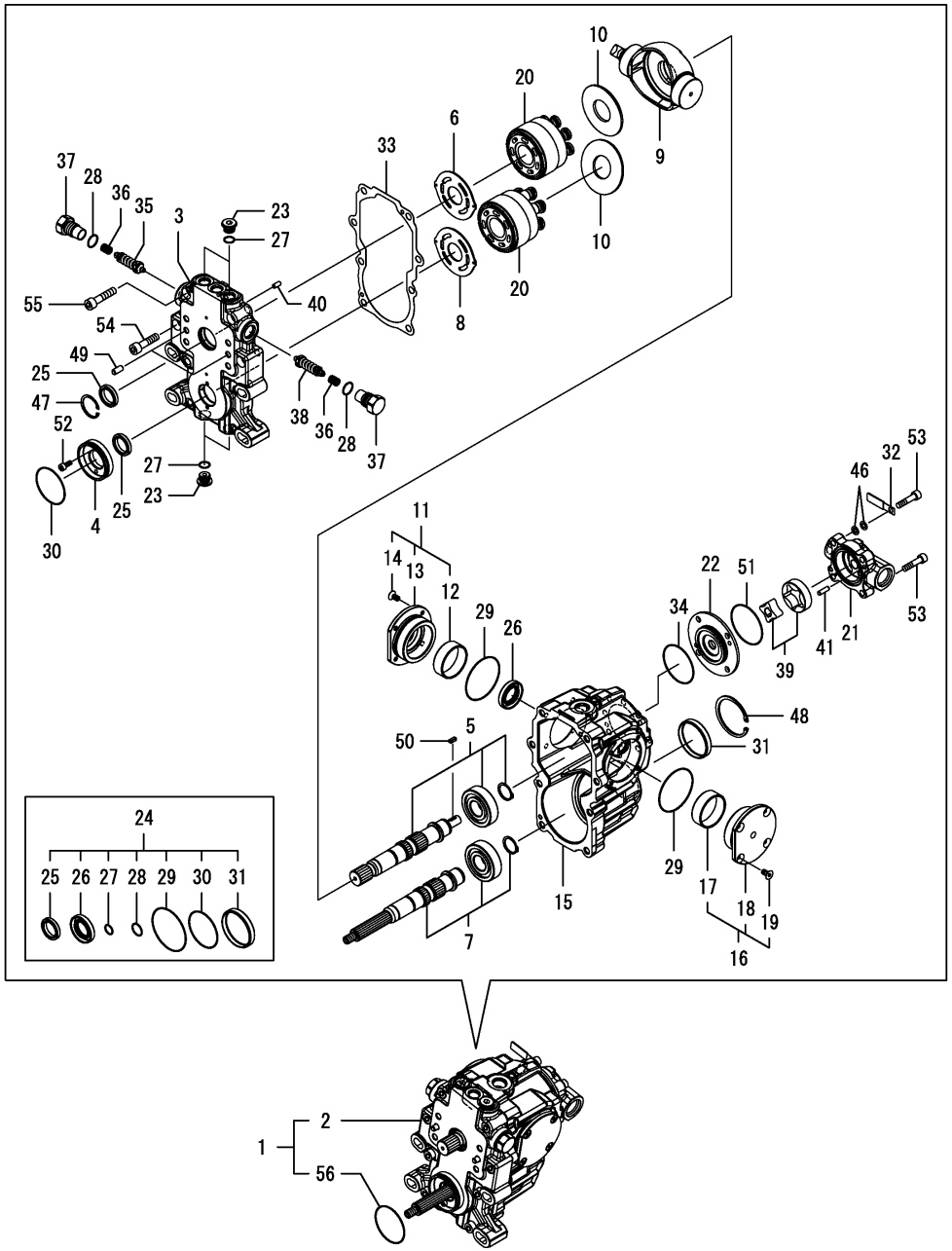

No.	Lev.	Parts No.	Description	Q'ty (A)	(B)	(C)	(D)	(E)	(F)	I	R
56	2	24341-000560	O-RING, 1AS56.0	1							

N:Old $\xleftarrow[\text{No}]{\text{Yes}}$ New, Q:Old $\xleftarrow[\text{Yes}]{\text{No}}$ New, R:Old $\xleftarrow[\text{Yes}]{\text{Yes}}$ New, S:Old $\xleftarrow[\text{No}]{\text{No}}$ New, W:Add, Z:Discontinued, F:Interchangeable by set, K:Q'ty Change

Copyright (C) 2018 YANMAR CO., LTD. All RightsReserved.

Fig.95. TRUNNION ARM

(A)=AW70GV,RSX(F)-IN (D)=
(B)= (E)=
(C)= (F)=

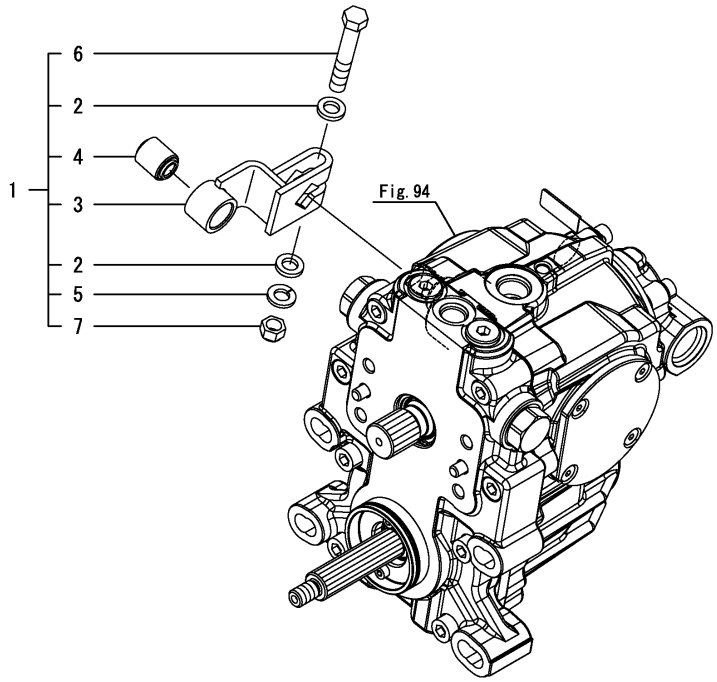

No.	Lev.	Parts No.	Description	Q'ty (A)	(B)	(C)	(D)	(E)	(F)	I	R
1	1	7E6B00-52810	ARM ASSY,TRUNNION	1							
2	2	1E8530-42900	WASHER, 10.5X18X3	2							
3	2	1E6B00-52800	ARM, TRUNNION	1							
4	2	1E6B00-52840	BUSH, 10X20X24	1							
5	2	22217-100000	WASHER, SPRING 10	1							
6	2	26116-100602	BOLT, M10X 60 PLATED	1							
7	2	26346-100002	NUT, M10	1							

N:Old $\xleftrightarrow[\text{No}]{\text{Yes}}$ New, Q:Old $\xleftrightarrow[\text{Yes}]{\text{No}}$ New, R:Old $\xleftrightarrow[\text{Yes}]{\text{Yes}}$ New, S:Old $\xleftrightarrow[\text{No}]{\text{No}}$ New, W:Add, Z:Discontinued, F:Interchangeable by set, K:Q'ty Change

Copyright (C) 2018 YANMAR CO., LTD. All RightsReserved.

Fig.96. H.S.T. MOUNT

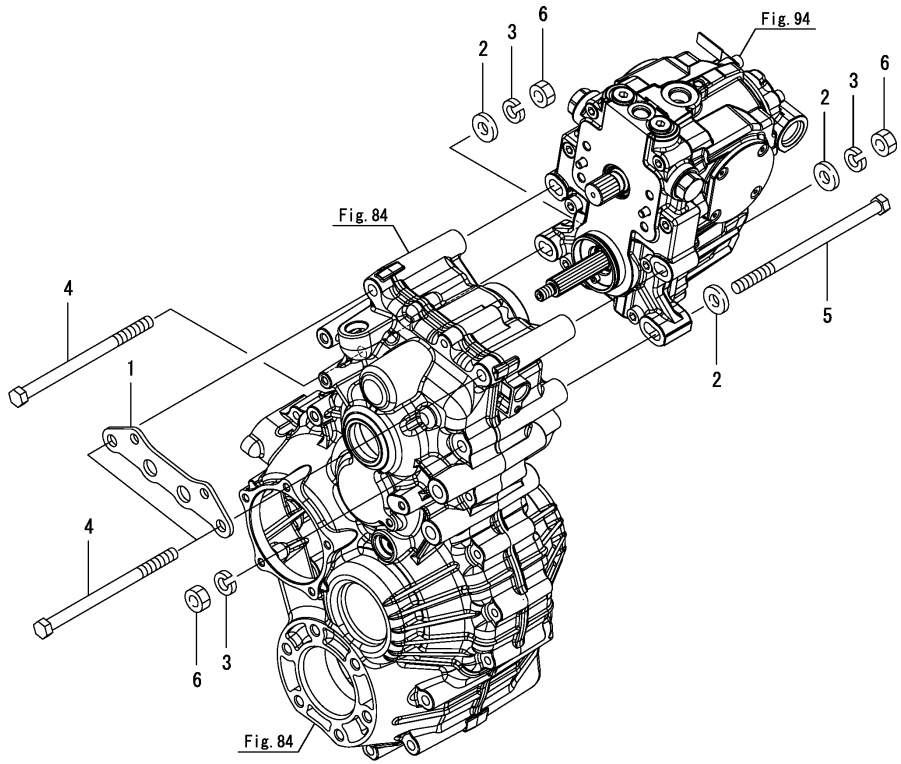

(A)=AW70GV,RSX(F)-IN (D)=
(B)= (E)=
(C)= (F)=

No.	Lev.	Parts No.	Description	Q'ty (A)	(B)	(C)	(D)	(E)	(F)	I	R
1	1	1E6B00-53180	PLATE, CONNECTING	1							
2	1	22137-120000	WASHER, 12	4							
3	1	22217-120000	WASHER, SPRING 12	4							
4	1	26116-121802	BOLT, M12X180 PLATED	3							
5	1	26116-122002	BOLT, M12X200 PLATED	1							
6	1	26716-120002	NUT, M12	4							

N:Old $\xleftrightarrow[\text{No}]{\text{Yes}}$ New, Q:Old $\xleftrightarrow[\text{Yes}]{\text{No}}$ New, R:Old $\xleftrightarrow[\text{Yes}]{\text{Yes}}$ New, S:Old $\xleftrightarrow[\text{No}]{\text{No}}$ New, W:Add, Z:Discontinued, F:Interchangeable by set, K:Q'ty Change

Copyright (C) 2018 YANMAR CO., LTD. All RightsReserved.

Fig.97. INPUT CASE

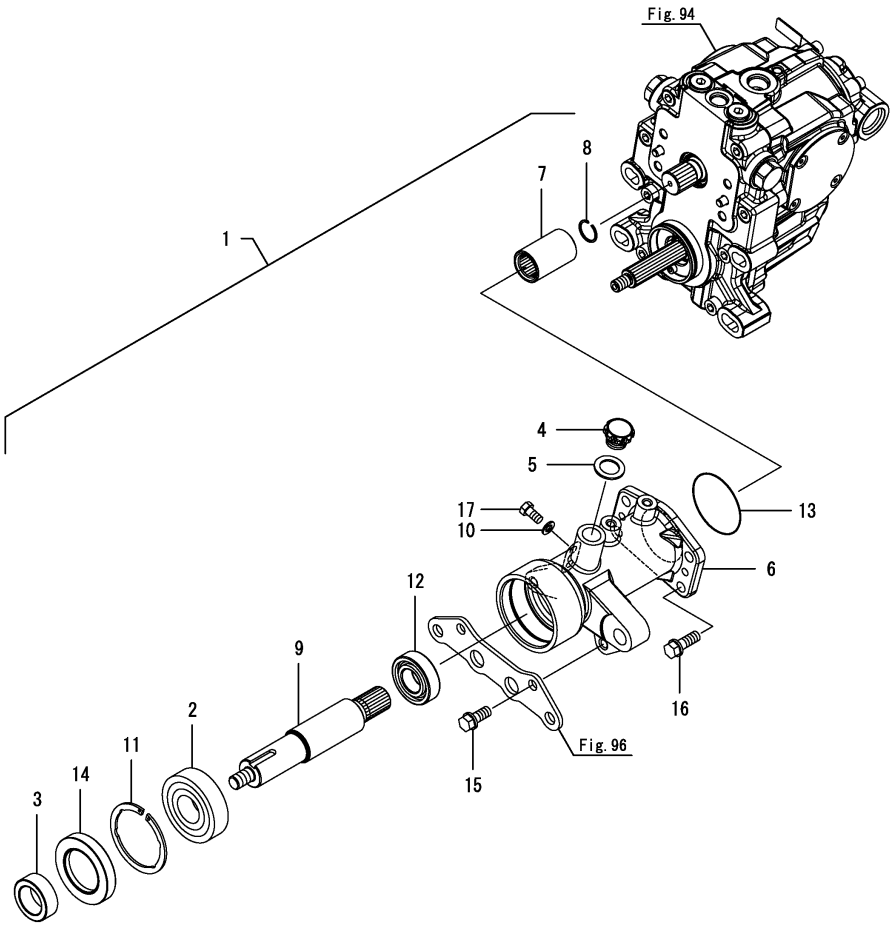

(A)=AW70GV,RSX(F)-IN (D)=
(B)= (E)=
(C)= (F)=

No.	Lev.	Parts No.	Description	Q'ty (A)	(B)	(C)	(D)	(E)	(F)	I	R
1	1	7E6C43-53150	CASE ASSY, INPUT	1							
2	2	1A6260-25150	BEARING, 6306R	1							
3	2	1E6680-35021	SLEEVE, 30X45X16	1							
4	2	1E6B30-35120	PLUG, OIL	1							
5	2	1E6B30-35130	PACKING, PLUG 20	1							
6	2	1E6C40-53160	CASE,MISSION INPUT	1							
6-1	2	1E6C43-53160	CASE,MISSION INPUT	1						N	1
	(A=F800269)										
7	2	1E6B30-53171	JOINT, 25X54	1							
8	2	1E6B30-53180	RING, 23	1							
9	2	1E6C40-53200	SHAFT, INPUT	1							
10	2	22190-080000	WASHER, SEAL 8	2							
11	2	22252-000721	RING, 72	1							
12	2	24101-062054	BEARING, BALL 6205	1							
13	2	24321-000650	O-RING, 1AG65.0	1							
14	2	24421-457212	SEAL, OIL TC457212	1							
15	2	26013-100252	BOLT, M10X 25	2							
16	2	26013-100302	BOLT, M10X 30	4							
17	2	26116-080162	BOLT, M8X 16 PLATED	2							

Remarks
(1)No.6-1, Fig.82 No.1-1, 2-1, 6-1, 10-1, 12-1, 15-1, 18-1 & 20 interchangeable by set.

N:Old $\frac{\text{Yes}}{\text{No}}$ New, Q:Old $\frac{\text{No}}{\text{Yes}}$ New, R:Old $\frac{\text{Yes}}{\text{Yes}}$ New, S:Old $\frac{\text{No}}{\text{No}}$ New, W:Add, Z:Discontinued, F:Interchangeable by set, K:Q'ty Change

Copyright (C) 2018 YANMAR CO., LTD. All RightsReserved.

Fig.98. MAIN SHAFT

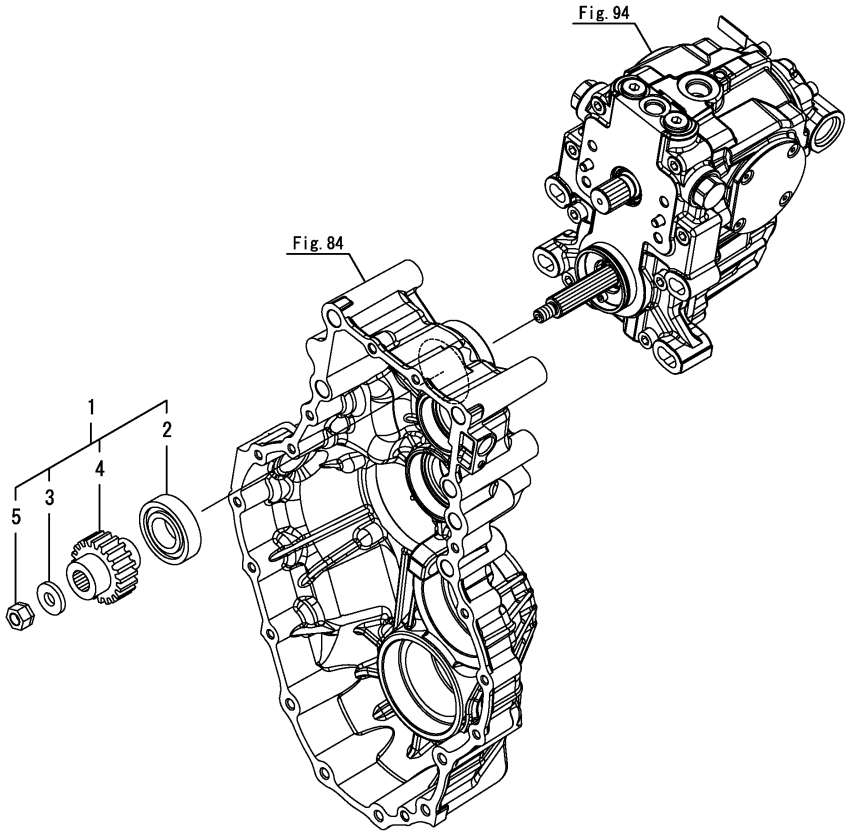

(A)=AW70GV,RSX(F)-IN (D)=
(B)= (E)=
(C)= (F)=

No.	Lev.	Parts No.	Description	Q'ty (A)	(B)	(C)	(D)	(E)	(F)	I	R
1	1	7E9062-54300	MAIN SHAFT ASY	1							
2	2	1E9300-54320	BEARING, NJ206R	1							
3	2	1E8555-54330	WASHER, 12X30X4.5	1							
3-1	2 (A=*2018.07)	1E6C43-54330	WASHER,12.5X30X4.5	1						R	
4	2	1E9062-54330	GEAR, 22	1							
5	2	1E8555-54340	NUT, HARD LOCK M12	1							

N:Old $\xleftrightarrow[\text{No}]{\text{Yes}}$ New, Q:Old $\xleftrightarrow[\text{Yes}]{\text{No}}$ New, R:Old $\xleftrightarrow[\text{Yes}]{\text{Yes}}$ New, S:Old $\xleftrightarrow[\text{No}]{\text{No}}$ New, W:Add, Z:Discontinued, F:Interchangeable by set, K:Q'ty Change

Copyright (C) 2018 YANMAR CO., LTD. All RightsReserved.

Fig.99. FRONT COLUMN

(A)=AW70GV,RSX(F)-IN (D)=
(B)= (E)=
(C)= (F)=

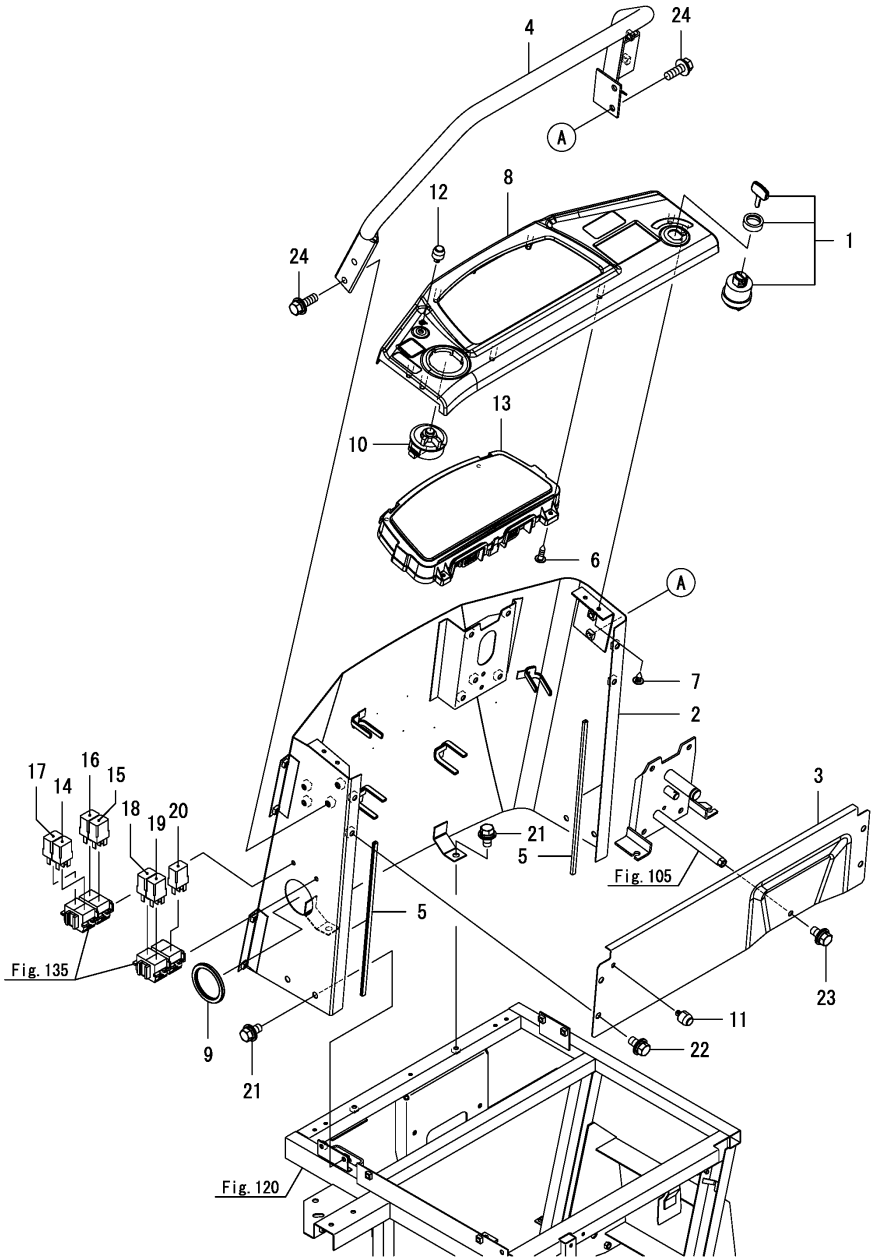

No.	Lev.	Parts No.	Description	Q'ty (A)	(B)	(C)	(D)	(E)	(F)	I	R
1	1	1C7020-06400	SWITCH ASSY, KEY	1							
2	1	1E6C40-61000-1	COLUMN,FRONT	1							
3	1	1E6C40-61190-1	STAY,COLUMN REAR	1							
4	1	1E6B30-61301	PIPE, FRONT ASSIST	1							
5	1	1E6B30-61350	PROTECTOR, 300	2							
6	1	1E6B30-61410	SCREW, 5X20	4							
7	1	1E6C40-61410	SCREW, 5X15	4							
8	1	1E6C40-61440	PANEL,FRONT	1							
9	1	1E8559-61970	PROTECTOR, 135	1							
10	1	1E6C40-81300	SWITCH, COMBINATION	1							
11	1	1E8665-81300	SWITCH, BUZZER STOP	1							
12	1	1E8665-81300	SWITCH, BUZZER STOP	1							
13	1	1E6C40-82303	METER ASSY	1							
14	1	1E9256-82600	RELAY, ISO 20A	1							
15	1	1E9256-82600	RELAY, ISO 20A	1							
16	1	1E9256-82600	RELAY, ISO 20A	1							
17	1	1E9256-82600	RELAY, ISO 20A	1							
18	1	1E9256-82600	RELAY, ISO 20A	1							
19	1	1E9256-82600	RELAY, ISO 20A	1							
20	1	1E9256-82600	RELAY, ISO 20A	1							
21	1	26014-080162	BOLT, M8X 16	6							
22	1	26014-080162	BOLT, M8X 16	4							
23	1	26014-080162	BOLT, M8X 16	1							
24	1	26014-080252	BOLT, M8X 25	4							

N:Old $\xleftarrow[\text{No}]{\text{Yes}}$ New, Q:Old $\xleftarrow[\text{Yes}]{\text{No}}$ New, R:Old $\xleftarrow[\text{Yes}]{\text{Yes}}$ New, S:Old $\xleftarrow[\text{No}]{\text{No}}$ New, W:Add, Z:Discontinued, F:Interchangeable by set, K:Q'ty Change

Copyright (C) 2018 YANMAR CO., LTD. All RightsReserved.

Fig.100. FRAME(SIDE COLUMN)

(A)=AW70GV,RSX(F)-IN (D)=
(B)= (E)=
(C)= (F)=

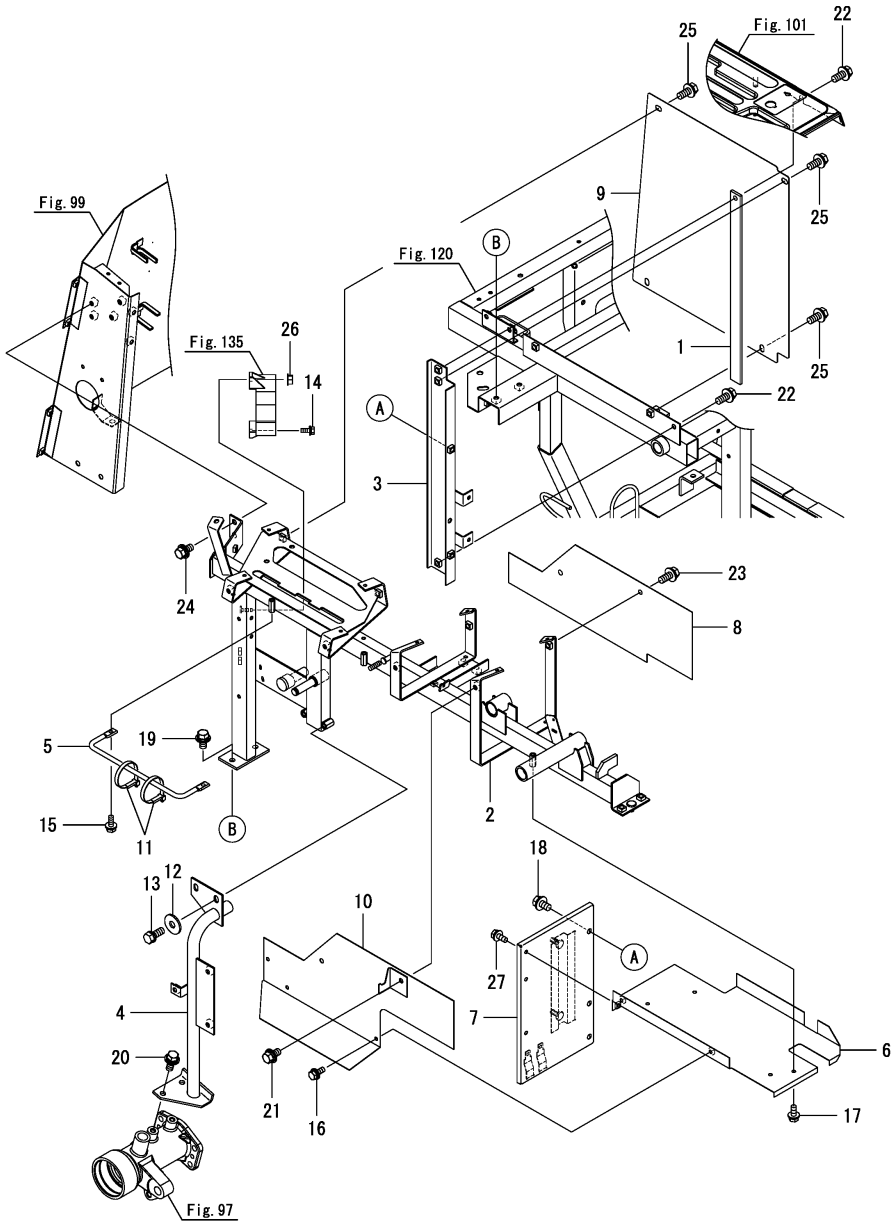

No.	Lev.	Parts No.	Description	Q'ty (A)	(B)	(C)	(D)	(E)	(F)	I	R
1	1	1E9060-61420	SEAL, 25X425	1							
2	1	1E6C43-61500	FRAME,SIDE COLUMN	1							
2-1	1	1E6C43-61501	FRAME,SIDE COLUMN	1						N	
	(A=F800103)										
3	1	1E6C40-61870	BRACKET,COLUMN	1							
4	1	1E6C40-61900	BRACKET,FULCRUM	1							
5	1	1E6B30-61990	GUIDE, HARNESS	1							
5-1	1	1E6B30-61990-1	GUIDE, HARNESS	1						S	1
	(A=*2018.08)										
6	1	1E6C43-62110	COVER,SIDE LOWER A	1							
7	1	1E6C40-62140-1	COVER,SIDE LOWER B	1							
7-1	1	1E6C43-62140	COVER,SIDE LOWER B	1						N	
	(A=F800157)										
8	1	1E6C40-62180	COVER,SIDE R REAR	1							
9	1	1E6B30-62211	COVER, SIDE R FRONT	1							
10	1	1E6C43-62250	COVER,SIDE L REAR B	1							
10-1	1	1E6C43-62270	PLATE, COVER L	1						N	
	(A=F800213)										
11	1	1E8559-84970	BAND, WIRE LOCK 140	2							
12	1	22157-080000	WASHER, 8	2							
13	1	26013-080202	BOLT, M8X 20	2							
14	1	26014-060162	BOLT, M6X 16	1							
15	1	26014-060162	BOLT, M6X 16	2							
16	1	26014-060162	BOLT, M6X 16	3							
17	1	26014-060162	BOLT, M6X 16	2							
18	1	26014-080162	BOLT, M8X 16	2							
19	1	26014-080202	BOLT, M8X 20	2							
20	1	26014-080202	BOLT, M8X 20	2							
21	1	26014-080202	BOLT, M8X 20	2							
22	1	26014-080202	BOLT, M8X 20	2							
23	1	26014-080202	BOLT, M8X 20	2							
24	1	26014-080202	BOLT, M8X 20	2							
25	1	26014-080202	BOLT, M8X 20	4							
26	1	26367-060002	NUT, M6	1							
27	1	26014-060162	BOLT, M6X 16	1							

Remarks
(1)Painting color=No.5 : YANMAR NAVY GRAY, No.5-1 : CATION E-COATING BLACK.

N:Old $\xleftarrow[\text{No}]{\text{Yes}}$ New, Q:Old $\xleftarrow[\text{Yes}]{\text{No}}$ New, R:Old $\xleftarrow[\text{Yes}]{\text{Yes}}$ New, S:Old $\xleftarrow[\text{No}]{\text{No}}$ New, W:Add, Z:Discontinued, F:Interchangeable by set, K:Q'ty Change

Copyright (C) 2018 YANMAR CO., LTD. All RightsReserved.

Fig.101. SIDE COLUMN(1)

(A)=AW70GV,RSX(F)-IN (D)=
(B)= (E)=
(C)= (F)=

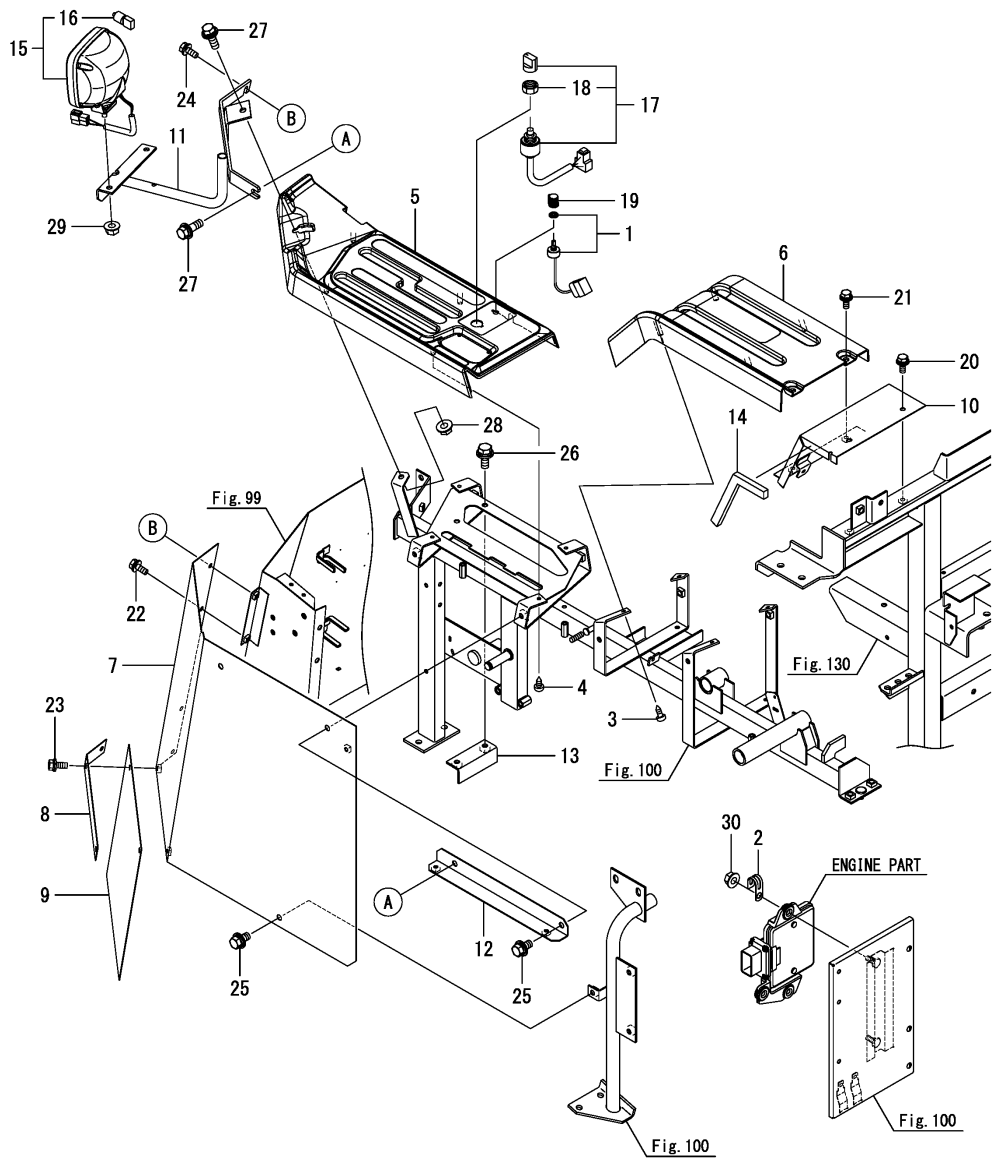

No.	Lev.	Parts No.	Description	Q'ty (A)	(B)	(C)	(D)	(E)	(F)	I	R
1	1	1C7200-07150	SENSOR, VOLUME 1.14K	1							
2	1	1A8296-51640	CLAMP, D	2							
3	1	1E6C40-61410	SCREW, 5X15	4							
4	1	1E6C40-61410	SCREW, 5X15	4							
5	1	1E6C40-62001	PANEL,SIDE FRONT	1							
6	1	1E6C43-62050	PANEL,SIDE REAR	1							
7	1	1E6B30-62310-1	COVER,SIDE L FRONT	1							
8	1	1E6B30-62350	RETAINER, RUBBER F	1							
9	1	1E6B30-62360	COVER, RUBBER FRONT	1							
10	1	1E6C43-62450	COVER, SIDE REAR	1							
11	1	1E6C40-62700-1	STAY ASSY, LAMP	1							
12	1	1E6C43-62910	STAY,SIDE L	1							
13	1	1E6C40-64050	STOPPER,MAIN CHANGE	1							
14	1	1E6C43-65460	SPONGE,195X15X10	1							
15	1	1E6C40-81500	LAMP ASSY, WORK 35W	1							
16	2	1E6C40-81510	BULB,35W	1							
17	1	1E8540-82100	SWITCH, SELECTOR 2S	1							
18	2	1E8540-82210	NUT	1							
19	1	1E9111-82100	KNOB, 16 GREEN	1							
20	1	26014-060162	BOLT, M6X 16	2							
21	1	26014-060162	BOLT, M6X 16	2							
22	1	26014-060162	BOLT, M6X 16	2							
23	1	26014-060162	BOLT, M6X 16	3							
24	1	26014-060202	BOLT, M6X 20	1							
25	1	26014-080162	BOLT, M8X 16	2							
26	1	26014-080202	BOLT, M8X 20	2							
27	1	26014-080252	BOLT, M8X 25	2							
28	1	26367-080002	NUT, M8	1						Z	
	(A=F800103)										
29	1	26367-080002	NUT, M8	1							
30	1	26367-080002	NUT, M8	2							

N:Old $\xleftarrow[\text{No}]{\text{Yes}}$ New, Q:Old $\xleftarrow[\text{Yes}]{\text{No}}$ New, R:Old $\xleftarrow[\text{Yes}]{\text{Yes}}$ New, S:Old $\xleftarrow[\text{No}]{\text{No}}$ New, W:Add, Z:Discontinued, F:Interchangeable by set, K:Q'ty Change

Copyright (C) 2018 YANMAR CO., LTD. All RightsReserved.

Fig.102. SIDE COLUMN(2)

(A)=AW70GV,RSX(F)-IN
(B)=
(C)=
(D)=
(E)=
(F)=

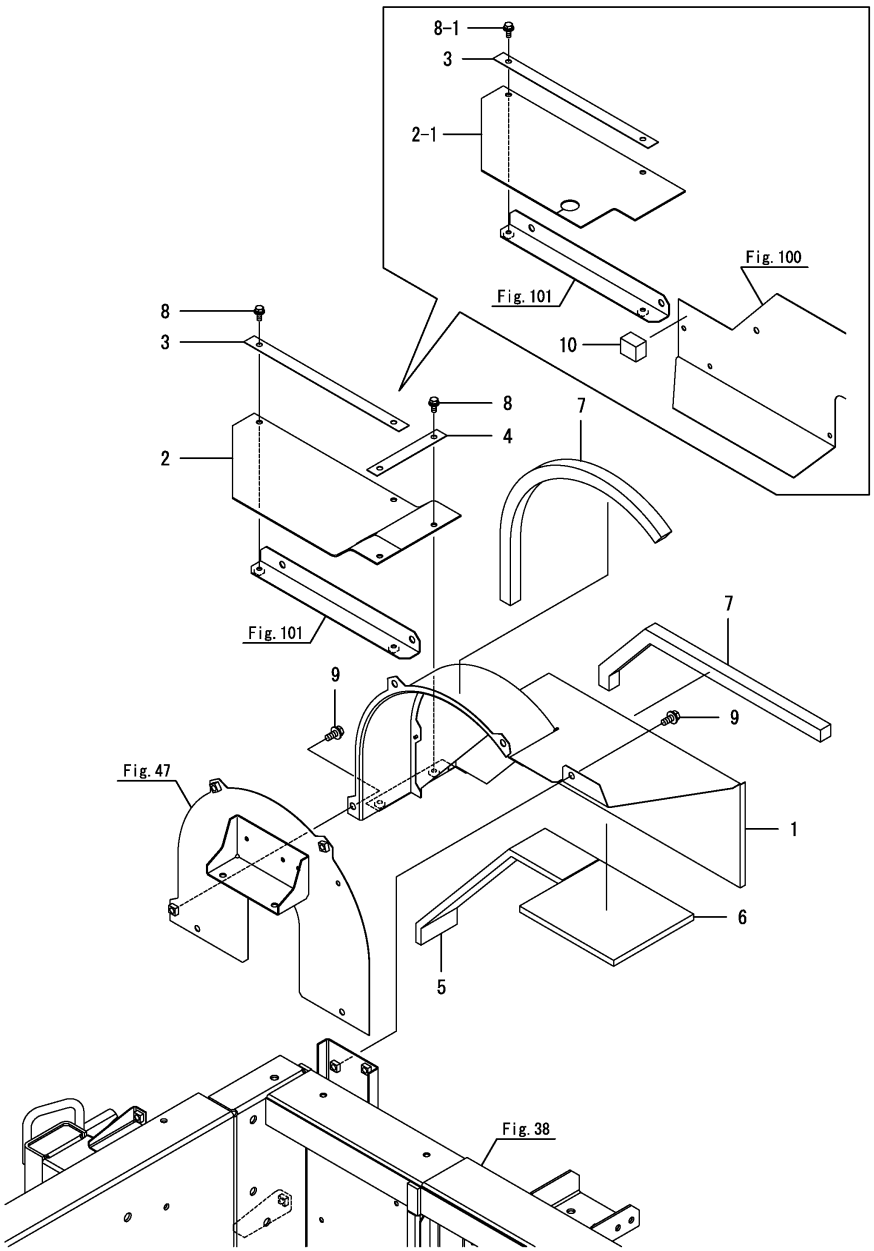

No.	Lev.	Parts No.	Description	Q'ty (A)	(B)	(C)	(D)	(E)	(F)	I	R
1	1	1E6C48-65300	COVER, K CLUTCH	1						Z	
	(A=F800206)										
2	1	1E6C80-65390	SHEET,SIDE	1							
2-1	1	1E6C80-65590	SHEET,SIDE	1						S	
	(A=F800206)										
3	1	1E6C80-65400	PLATE,SIDE A	1							
3-1	1	1E6C80-65400-1	PLATE,SIDE A	1						S	1
	(A=*2018.12)										
4	1	1E6C80-65410	PLATE,SIDE B	1						Z	
	(A=F800206)										
5	1	1E6C80-65430	SPONGE,K CLUTCH A	1						Z	
	(A=F800206)										
6	1	1E6C80-65440	SPONGE,K CLUTCH B	1						Z	
	(A=F800206)										
7	1	1E6C80-65480	SPONGE,K CLUTCH F	2						Z	
	(A=F800206)										
8	1	26014-060162	BOLT, M6X 16	4							
8-1	1	26014-060162	BOLT, M6X 16	2						K	
	(A=F800206)										
9	1	26014-080202	BOLT, M8X 20	4						Z	
	(A=F800206)										
10	1	1E6C80-65470	SPONGE,K CLUTCH E	1						W	
	(A=F800206)										

Remarks
(1)Painting color=No.3 : YANMAR NAVY GRAY, No.3-1 : CATION E-COATING BLACK.

N:Old $\xleftarrow[\text{No}]{\text{Yes}}$ New, Q:Old $\xleftarrow[\text{Yes}]{\text{No}}$ New, R:Old $\xleftarrow[\text{Yes}]{\text{Yes}}$ New, S:Old $\xleftarrow[\text{No}]{\text{No}}$ New, W:Add, Z:Discontinued, F:Interchangeable by set, K:Q'ty Change

Copyright (C) 2018 YANMAR CO., LTD. All RightsReserved.

Fig.103. SIDE LAMP

(A)=AW70GV,RSX(F)-IN (D)=
(B)= (E)=
(C)= (F)=

No.	Lev.	Parts No.	Description	Q'ty (A)	(B)	(C)	(D)	(E)	(F)	I	R
1	1	1E6C40-81500	LAMP ASSY, WORK 35W	1							
2	2	1E6C40-81510	BULB,35W	1							
3	1	26367-080002	NUT, M8	1							

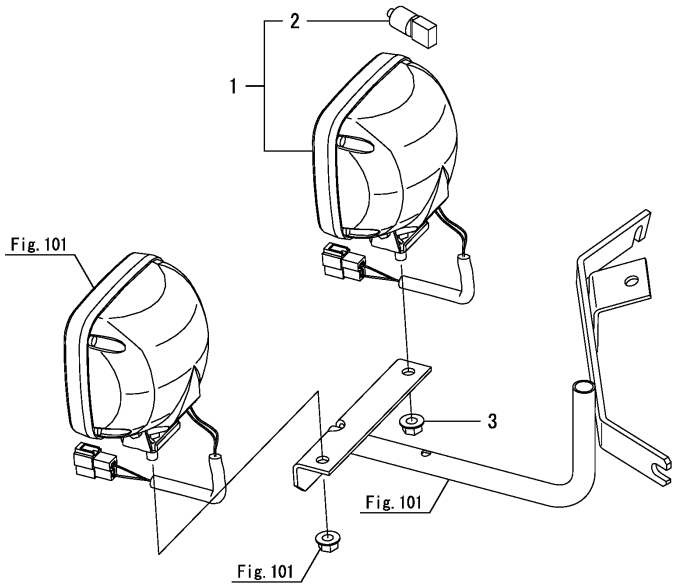

N:Old $\xleftrightarrow[\text{No}]{\text{Yes}}$ New, Q:Old $\xleftrightarrow[\text{Yes}]{\text{No}}$ New, R:Old $\xleftrightarrow[\text{Yes}]{\text{Yes}}$ New, S:Old $\xleftrightarrow[\text{No}]{\text{No}}$ New, W:Add, Z:Discontinued, F:Interchangeable by set, K:Q'ty Change

Copyright (C) 2018 YANMAR CO., LTD. All RightsReserved.

Fig.104. BRAKE CONTROL

(A)=AW70GV,RSX(F)-IN
(B)=
(C)=
(D)=
(E)=
(F)=

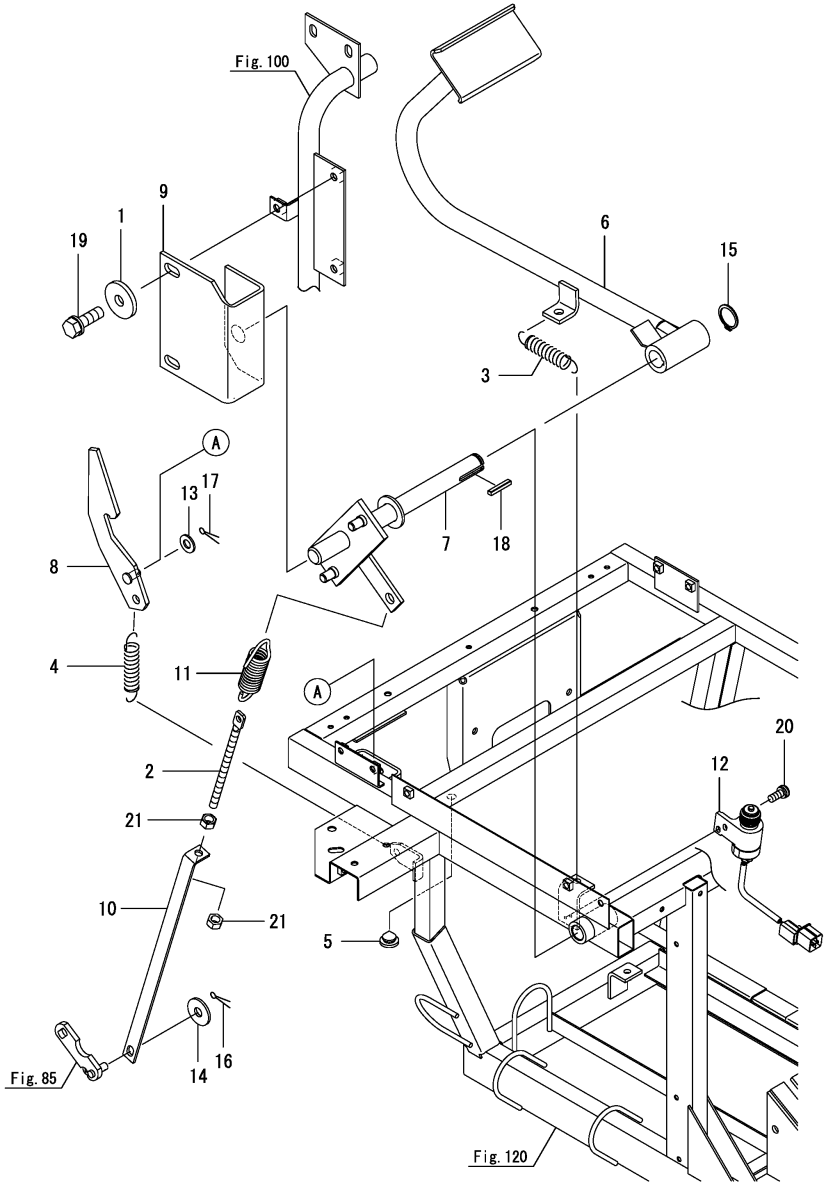

No.	Lev.	Parts No.	Description	Q'ty (A)	(B)	(C)	(D)	(E)	(F)	I	R
1	1	1E8559-22220	WASHER, 8.5X28X3.2	2							
2	1	1E8559-35170	SCREW, TENSION 8X140	1							
3	1	1E8559-35700	SPRING, 2.3X17.3X74	1							
4	1	1E8559-35700	SPRING, 2.3X17.3X74	1							
5	1	1E8559-51670	RUBBER, STOPPER	1							
6	1	1E6B30-63001	PEDAL ASSY, BRAKE	1							
7	1	1E6B30-63051	SHAFT ASSY, FULCRUM	1							
8	1	1E6B30-63101-2	PLATE,PEDAL LOCK	1							
9	1	1E6C40-63140	PLATE,SHAFT FULCRUM	1							
9-1	1	1E6C40-63140-1	PLATE,SHAFT FULCRUM	1						S	1
	(A=*2018.08)										
10	1	1E6B30-63160-1	ROD,BRAKE	1							
11	1	1E8559-63660	SPRING, 20X86.5	1							
12	1	1E8770-81320	SWITCH, PUSH R	1							
13	1	22137-080000	WASHER, 8	1							
14	1	22157-080000	WASHER, 8	1							
15	1	22242-000200	RING, 20	1							
16	1	22417-200160	PIN, COTTER 2.0X16	1							
17	1	22417-200160	PIN, COTTER 2.0X16	1							
18	1	22550-050300	KEY 5X30	1							
19	1	26013-080252	BOLT, M8X 25	2							
20	1	26022-050122	SCREW, M5X12	2							
21	1	26717-080002	NUT, M8	2							

Remarks
(1)Painting color=No.9 : YANMAR NAVY GRAY, No.9-1 : CATION E-COATING BLACK.

N:Old $\xleftarrow[\text{No}]{\text{Yes}}$ New, Q:Old $\xleftarrow[\text{Yes}]{\text{No}}$ New, R:Old $\xleftarrow[\text{Yes}]{\text{Yes}}$ New, S:Old $\xleftarrow[\text{No}]{\text{No}}$ New, W:Add, Z:Discontinued, F:Interchangeable by set, K:Q'ty Change

Copyright (C) 2018 YANMAR CO., LTD. All RightsReserved.

Fig.105. CLUTCH CONTROL(SIDE)

(A)=AW70GV,RSX(F)-IN (D)=
(B)= (E)=
(C)= (F)=

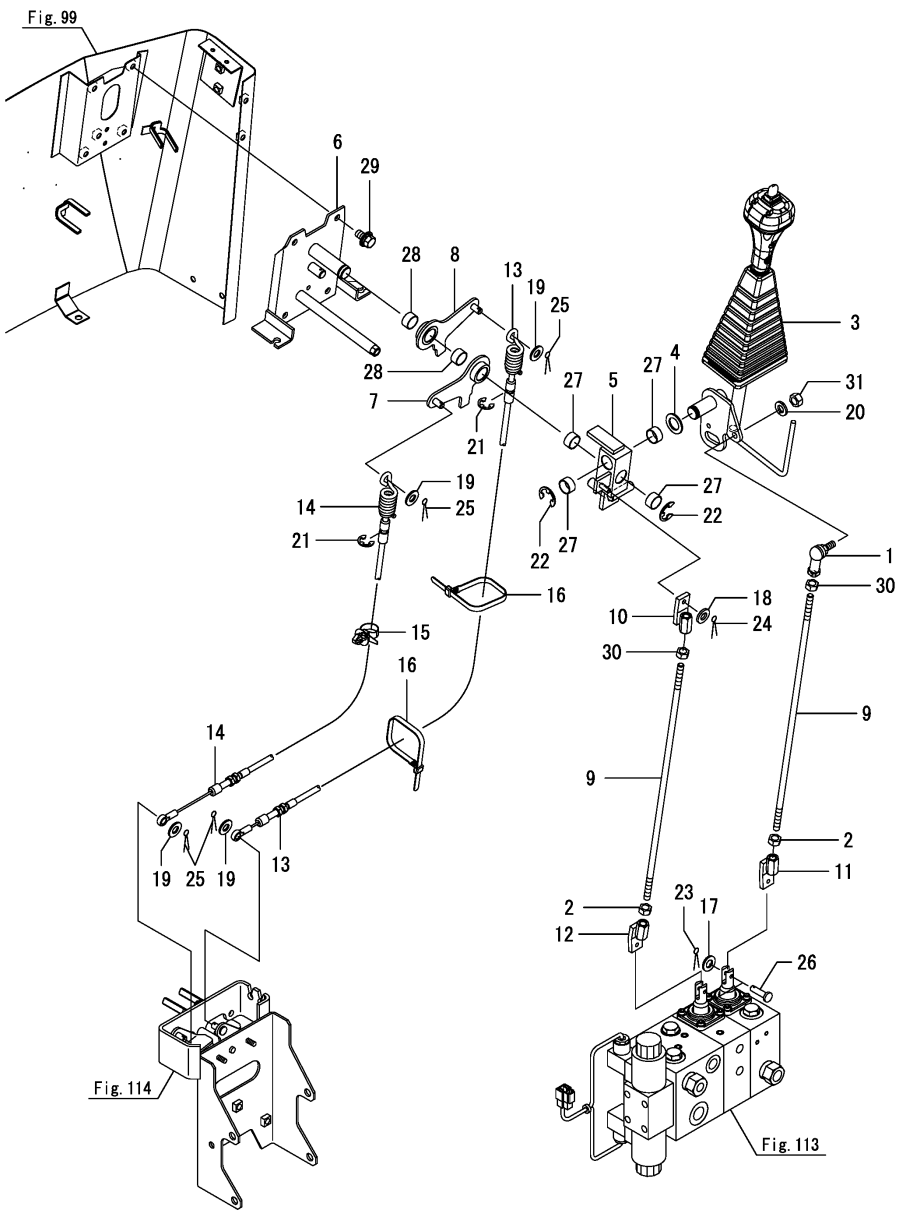

No.	Lev.	Parts No.	Description	Q'ty (A)	(B)	(C)	(D)	(E)	(F)	I	R
1	1	1E4760-43090	BALL, LINK BL8D	1							
2	1	1C730C-63240	NUT, M8 L	2							
3	1	1E6C40-66070	LEVER ASSY, MONO	1							
4	1	1E6C40-66161-1	WASHER	1							
5	1	1E6C40-66210	CONNECTOR,SIDE CLUTC	1							
6	1	1E6C40-66341	BRACKET,SIDE CLUTCH	1							
7	1	1E6C40-66410	ARM, LINK L	1							
8	1	1E6C40-66440	ARM, LINK R	1							
9	1	1E6C40-66500	ROD,430	2							
10	1	1E6C40-66650	END, ROD	1							
11	1	1E6C40-66670-1	END, ROD	1							
12	1	1E6C40-66710	END, ROD L	1							
13	1	1E6C40-66961	WIRE, BRAKE R	1							
14	1	1E6C40-66971	WIRE, BRAKE L	1							
15	1	1E9265-84300	CLIP, BAND	1							
16	1	1E8559-84960	BAND, WIRE LOCK 250	2							
17	1	22137-050000	WASHER, 5	2						Z	
	(A=F800034)										
18	1	22137-060000	WASHER, 6	1							
19	1	22137-080000	WASHER, 8	4							
20	1	22217-080000	WASHER, SPRING 8	1							
21	1	22272-000060	RING, E- 6	2							
22	1	22272-000150	RING, E-15	2							
23	1	22417-160160	PIN, COTTER 1.6X16	2						Z	
	(A=F800034)										
24	1	22417-160200	PIN, COTTER 1.6X20	1							
24-1	1	22417-160160	PIN, COTTER 1.6X16	1						N	
	(A=F800034)										
25	1	22417-200200	PIN, COTTER 2.0X20	4							
26	1	22487-050160	PIN, H 5X 16	2						Z	
	(A=F800034)										
27	1	24550-018100	BUSH, 18X10	4							
28	1	24550-018100	BUSH, 18X10	2							
29	1	26014-080162	BOLT, M8X 16	4							
30	1	26717-080002	NUT, M8	2							
31	1	26717-080002	NUT, M8	1							

N:Old $\frac{\text{Yes}}{\text{No}}$ New, Q:Old $\frac{\text{No}}{\text{Yes}}$ New, R:Old $\frac{\text{Yes}}{\text{Yes}}$ New, S:Old $\frac{\text{No}}{\text{No}}$ New, W:Add, Z:Discontinued, F:Interchangeable by set, K:Q'ty Change

Copyright (C) 2018 YANMAR CO., LTD. All RightsReserved.

Fig.106. MAIN SHIFT CONTROL

(A)=AW70GV,RSX(F)-IN (D)=
(B)= (E)=
(C)= (F)=

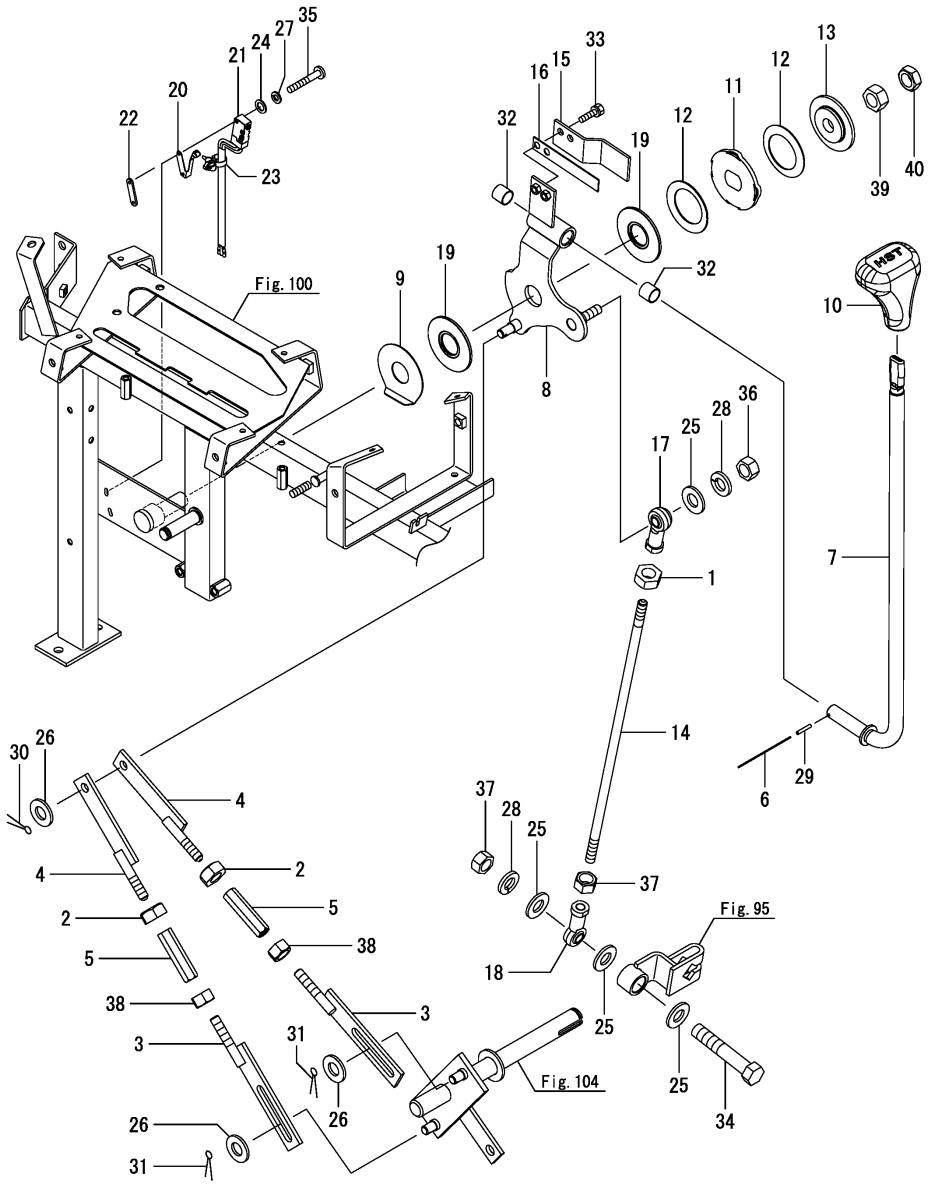

No.	Lev.	Parts No.	Description	Q'ty (A)	(B)	(C)	(D)	(E)	(F)	I	R
1	1	1E8559-63481	NUT, L 10	1							
2	1	1E8559-63481	NUT, L 10	2							
3	1	1E9060-63700	ROD, B	2							
4	1	1E8550-63800	ROD, A	2							
5	1	1E8559-63860	NUT, ADJUST 10 LR	2							
6	1	1E9060-63990	WIRE, 1.2X80	1							
7	1	1E6B30-64000	LEVER, MAIN CHANGE	1							
8	1	1E6B30-64051	BRACKET ASSY,FULCRUM	1							
9	1	1E9060-64101	WASHER	1							
10	1	1E6C40-64140	GRIP, HST LEVER	1							
11	1	1E8559-64220	WASHER, 25	1							
12	1	1E8559-64230	SPRING, 62X16	2							
13	1	1E8559-64250-1	PLATE 65	1							
14	1	1E6C40-64550	ROD, MAIN CHANGE	1							
15	1	1E6C40-64560	LEVER ASSY, STOPPER	1							
16	1	1E6C40-64600	SPRING, MAIN CHANGE	1							
17	1	1E6B30-64620	ROD-END,CHSL10BK	1							
18	1	1E6B30-64630	ROD-END, CHS10BK	1							
19	1	1E9430-64800	PLATE, FRICTION 65	2							
20	1	1E8255-81180	LEVER, ROLLER NV	1							
21	1	1E8915-81450	SWITCH, MICRO	1							
22	1	1E8550-84220	NUT, SWITCH 2-M3	1							
23	1	1E9265-84300	CLIP, BAND	1							
24	1	22137-030000	WASHER, 3	2							
25	1	22137-100000	WASHER, 10	4							
26	1	22137-100000	WASHER, 10	3							
27	1	22217-030000	WASHER, SPRING 3	2							
28	1	22217-100000	WASHER, SPRING 10	2							
29	1	22351-030020	PIN, SPRING 3.0X20	1							
30	1	22417-200200	PIN, COTTER 2.0X20	1							
31	1	22417-250250	PIN, COTTER 2.5X25	2							
32	1	24550-015150	BUSH, 15X15	2							
33	1	26013-060162	BOLT, M6X 16	2							
34	1	26116-100552	BOLT, M10X 55 PLATED	1							
35	1	26587-030202	SCREW, M3X20	2							
36	1	26717-100002	NUT, M10	1							
37	1	26717-100002	NUT, M10	2							
38	1	26717-100002	NUT, M10	2							
39	1	26737-160002	NUT, M16	1							
40	1	26777-160002	NUT, LOCK M16	1							

N:Old ◄Yes/No► New, Q:Old ◄No/Yes► New, R:Old ◄Yes/Yes► New, S:Old ◄No/No► New, W:Add, Z:Discontinued, F:Interchangeable by set, K:Q'ty Change

Copyright (C) 2018 YANMAR CO., LTD. All RightsReserved.

Fig.107. SUB SHIFT CONTROL

(A)=AW70GV,RSX(F)-IN (D)=
(B)= (E)=
(C)= (F)=

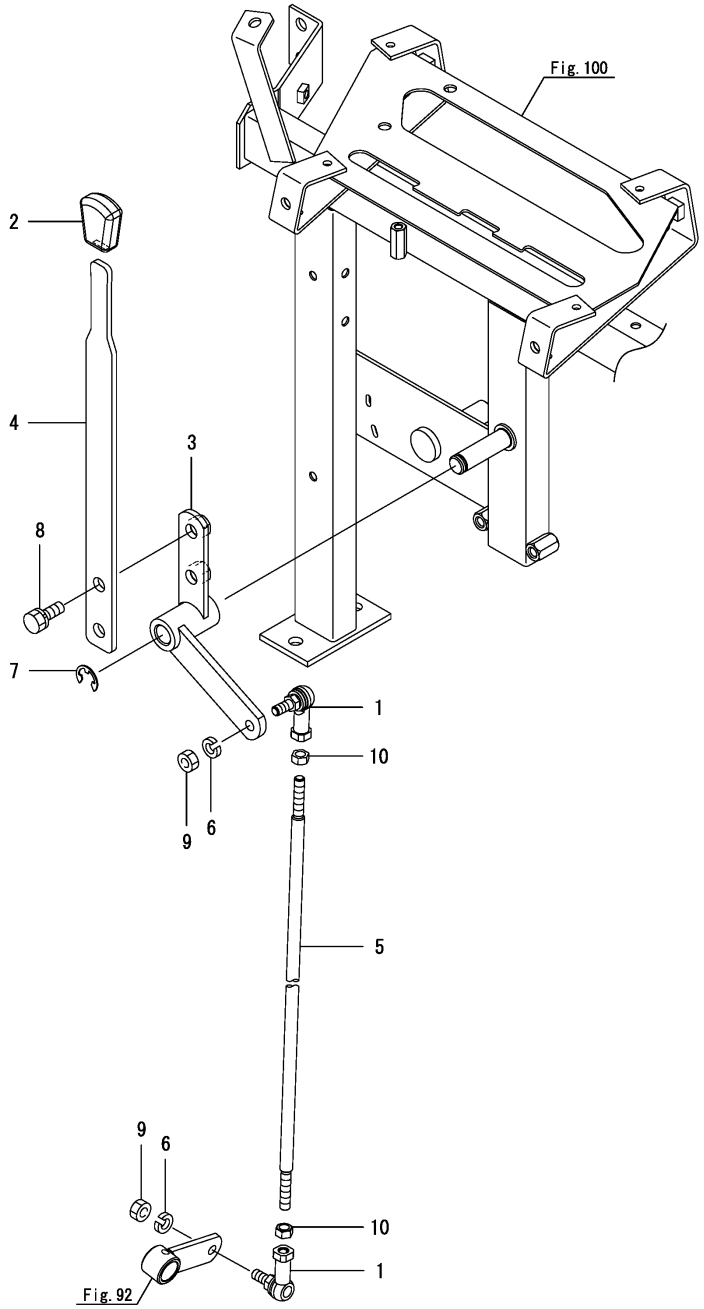

No.	Lev.	Parts No.	Description	Q'ty (A)	(B)	(C)	(D)	(E)	(F)	I	R
1	1	1C731C-47130	BALL,LINK M8 A	2							
2	1	1C726C-47910	KNOB, 4X13	1							
3	1	1E6C43-64200	LEVER, SUB CHANGE	1							
4	1	1E6C40-64221	LEVER, EXTENSION	1							
5	1	1E6C40-64260	ROD,SUB CHANGE	1							
6	1	22217-080000	WASHER, SPRING 8	2							
7	1	22272-000120	RING, E-12	1							
8	1	26013-100202	BOLT, M10X 20	2							
9	1	26717-080002	NUT, M8	2							
10	1	26717-080002	NUT, M8	2							

N:Old $\xleftarrow[\text{No}]{\text{Yes}}$ New, Q:Old $\xleftarrow[\text{Yes}]{\text{No}}$ New, R:Old $\xleftarrow[\text{Yes}]{\text{Yes}}$ New, S:Old $\xleftarrow[\text{No}]{\text{No}}$ New, W:Add, Z:Discontinued, F:Interchangeable by set, K:Q'ty Change

Copyright (C) 2018 YANMAR CO., LTD. All RightsReserved.

Fig.108. CLUTCH CONTROL(REAP)

(A)=AW70GV,RSX(F)-IN
(B)=
(C)=
(D)=
(E)=
(F)=

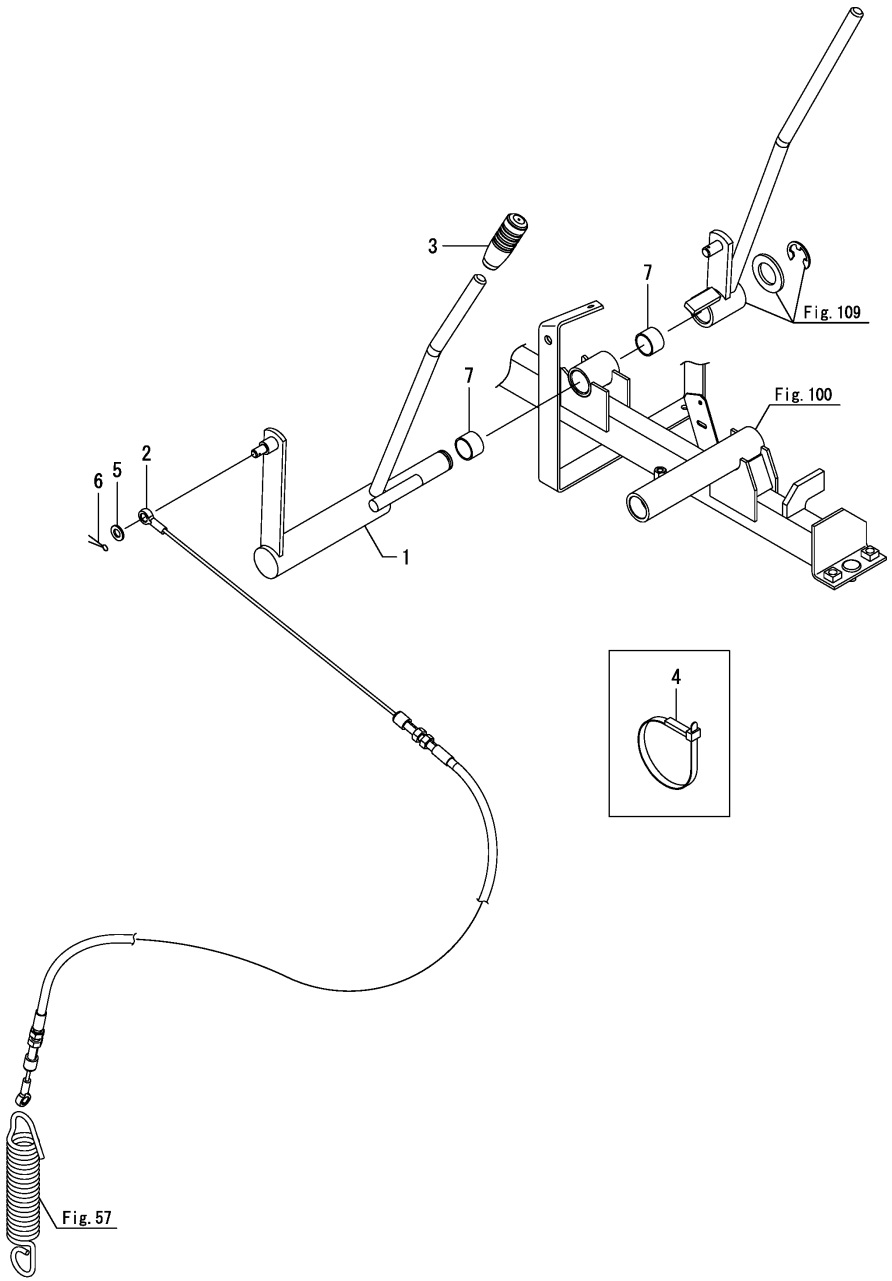

No.	Lev.	Parts No.	Description	Q'ty (A)	(B)	(C)	(D)	(E)	(F)	I	R
1	1	1E6C80-65200	LEVER,K CLUTCH	1							
2	1	1E6C80-65250	WIRE, REAPING CLUTCH	1							
2-1	1	1E6C80-65251	WIRE, REAPING CLUTCH	1						N	
	(A=F800033)										
3	1	1E6B30-65300	GRIP, LEVER RED	1							
4	1	1E8559-84970	BAND, WIRE LOCK 140	1							
5	1	22117-080000	WASHER, 8	1							
6	1	22417-200200	PIN, COTTER 2.0X20	1							
7	1	24550-020150	BUSH, 20X15	2							

N:Old $\overset{\text{Yes}}{\underset{\text{No}}{\leftrightarrows}}$ New, Q:Old $\overset{\text{No}}{\underset{\text{Yes}}{\leftrightarrows}}$ New, R:Old $\overset{\text{Yes}}{\underset{\text{Yes}}{\leftrightarrows}}$ New, S:Old $\overset{\text{No}}{\underset{\text{No}}{\leftrightarrows}}$ New, W:Add, Z:Discontinued, F:Interchangeable by set, K:Q'ty Change

Copyright (C) 2018 YANMAR CO., LTD. All RightsReserved.

Fig.109. CLUTCH CONTROL(THRESH)

(A)=AW70GV,RSX(F)-IN (D)=
(B)= (E)=
(C)= (F)=

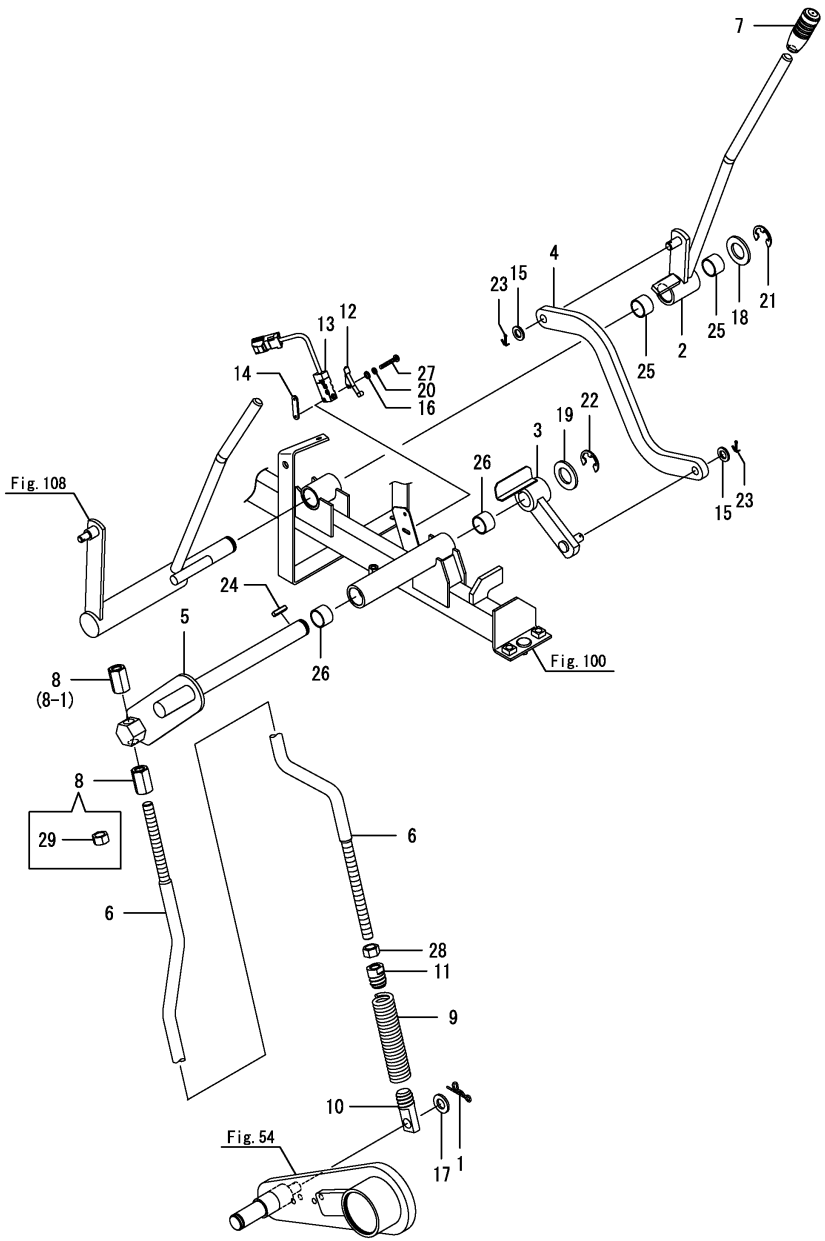

No.	Lev.	Parts No.	Description	Q'ty (A)	(B)	(C)	(D)	(E)	(F)	I	R
1	1	1C727C-26480	PIN, SNAP 12	1							
2	1	1E6C80-65000	LEVER,D CLUTCH	1							
3	1	1E6C80-65030	LINK,D CLUTCH A	1							
4	1	1E6C80-65060	PLATE, D LINK	1							
4-1	1	1E6C80-65060-1	PLATE, D LINK	1						S	1
	(A=*2018.08)										
5	1	1E6C80-65070	LINK, D CLUTCH B	1							
6	1	1E6C80-65090	ROD, D CLUTCH	1							
6-1	1	1E6C80-65091	ROD, D CLUTCH	1						N	
	(A=F800083)										
7	1	1E6B30-65300	GRIP, LEVER RED	1							
8	1	1E9060-65500	NUT, HIGH M12	2							
8-1	1	1E9060-65500	NUT, HIGH M12	1						K	
	(A=F800083)										
9	1	1E8552-65650	SPRING, 4.5X21.5X112	1							
10	1	1E8559-65690	HOOK, SCREW A	1							
11	1	1E8559-65700	HOOK, SCREW B	1							
12	1	1E8255-81180	LEVER, ROLLER NV	1							
13	1	1E8915-81450	SWITCH, MICRO	1							
14	1	1E8550-84220	NUT, SWITCH 2-M3	1							
15	1	22117-100000	WASHER, 10	2							
16	1	22137-030000	WASHER, 3	2							
17	1	22137-120000	WASHER, 12	1							
18	1	22137-200000	WASHER, 20	1							
19	1	22137-200000	WASHER, 20	1							
20	1	22217-030000	WASHER, SPRING 3	2							
21	1	22272-000150	RING, E-15	1							
22	1	22272-000150	RING, E-15	1							
23	1	22417-200200	PIN, COTTER 2.0X20	2							
24	1	22551-050200	KEY, 5X 20	1							
25	1	24550-020150	BUSH, 20X15	2							
26	1	24550-020150	BUSH, 20X15	2							
27	1	26587-030202	SCREW, M3X20	2							
28	1	26717-120002	NUT, M12	1							
29	1	26717-120002	NUT, M12	1						W	
	(A=F800083)										

Remarks
(1)Painting color=No.4 : YANMAR NAVY GRAY, No.4-1 : CATION E-COATING BLACK.

N:Old $\xleftarrow[\text{No}]{\text{Yes}}$ New, Q:Old $\xleftarrow[\text{Yes}]{\text{No}}$ New, R:Old $\xleftarrow[\text{Yes}]{\text{Yes}}$ New, S:Old $\xleftarrow[\text{No}]{\text{No}}$ New, W:Add, Z:Discontinued, F:Interchangeable by set, K:Q'ty Change

Copyright (C) 2018 YANMAR CO., LTD. All RightsReserved.

Fig.110. HYDRAULIC TANK

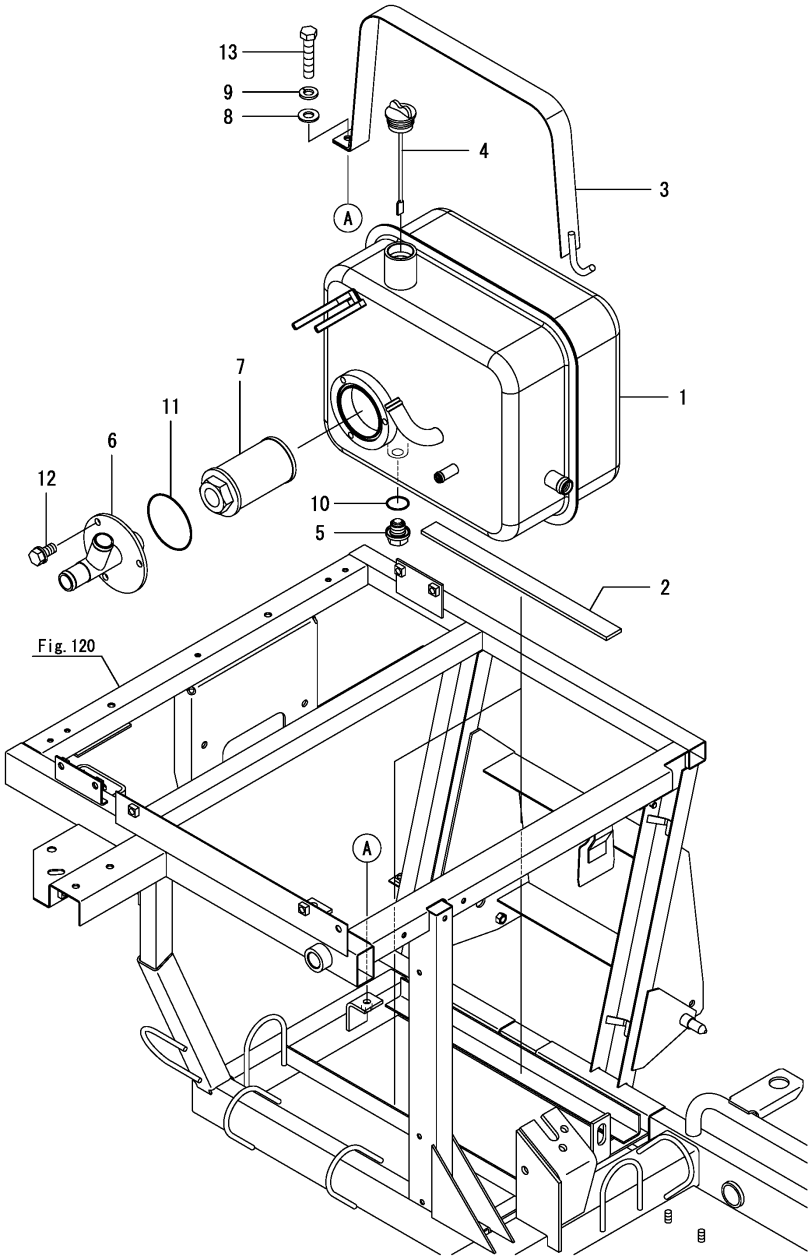

(A)=AW70GV,RSX(F)-IN (D)=
(B)= (E)=
(C)= (F)=

No.	Lev.	Parts No.	Description	Q'ty (A)	(B)	(C)	(D)	(E)	(F)	I	R
1	1	1E6B30-66000	TANK, HYDRAULIC	1							
2	1	1E9061-66050	SHEET, CUSHION	2							
3	1	1E8550-66150-1	BAND	1							
4	1	1E8130-66220	CAP, OIL M33X115	1							
5	1	1E8559-66300	PLUG, OIL 14	1							
6	1	1E6B30-66400	FLANGE, SUCTION	1							
7	1	1E8050-66790	FILTER, 15 0MESH	1							
8	1	22137-080000	WASHER, 8	1						Z	
	(A=F800034)										
9	1	22217-080000	WASHER, SPRING 8	1						Z	
	(A=F800034)										
10	1	24311-000160	O-RING, 1AP16.0	1							
11	1	24321-000700	O-RING, 1AG70.0	1							
12	1	26013-080162	BOLT, M8X 16	3							
13	1	26116-080404	BOLT, M8X 40 PLATED	1							
13-1	1	26014-080302	BOLT, M8X 30	1						N	
	(A=F800034)										

N:Old $\xleftarrow[\text{No}]{\text{Yes}}$ New, Q:Old $\xleftarrow[\text{Yes}]{\text{No}}$ New, R:Old $\xleftarrow[\text{Yes}]{\text{Yes}}$ New, S:Old $\xleftarrow[\text{No}]{\text{No}}$ New, W:Add, Z:Discontinued, F:Interchangeable by set, K:Q'ty Change

Copyright (C) 2018 YANMAR CO., LTD. All RightsReserved.

Fig.111. PIPING(VALVE)

(A)=AW70GV,RSX(F)-IN (D)=
(B)= (E)=
(C)= (F)=

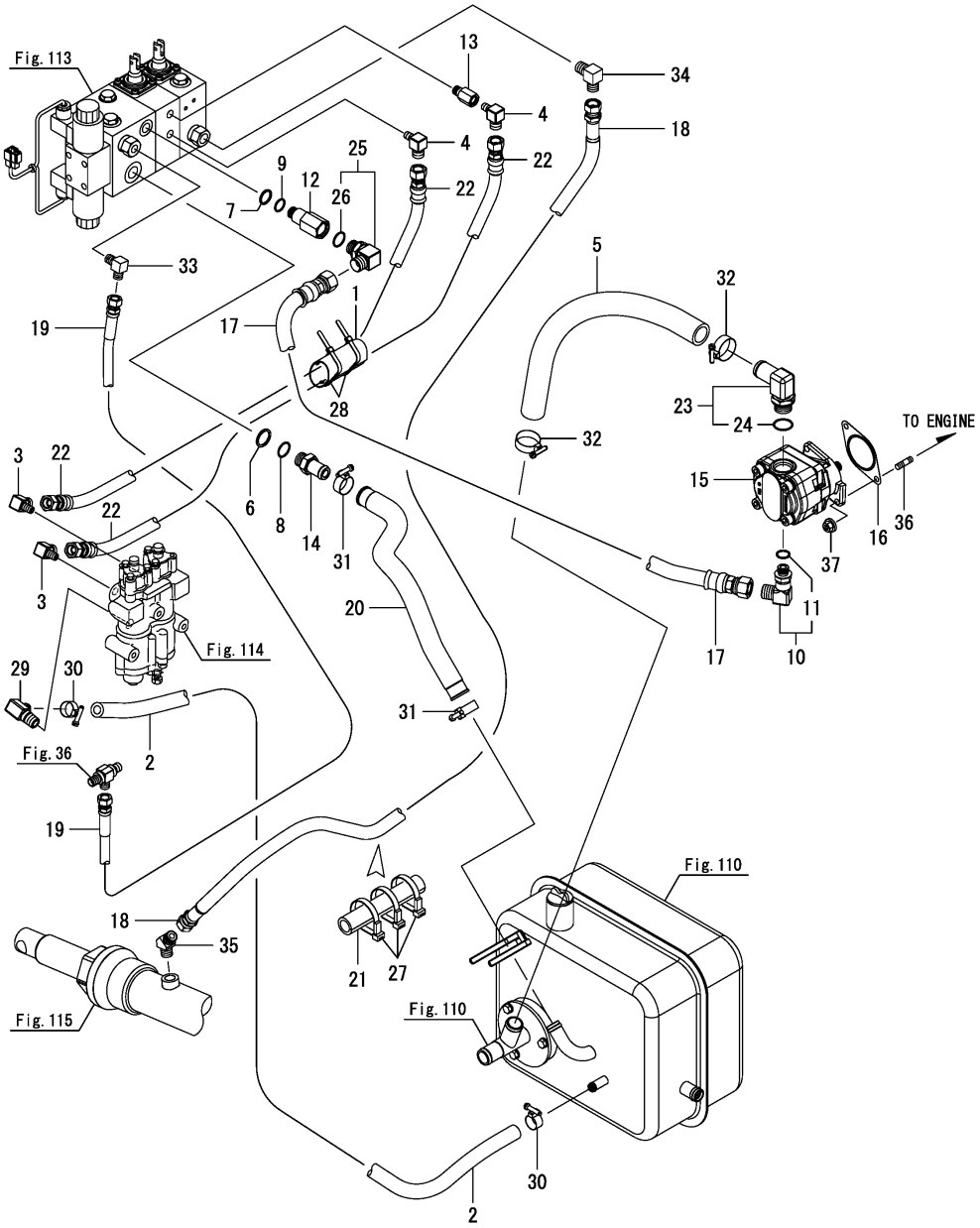

No.	Lev.	Parts No.	Description	Q'ty (A)	(B)	(C)	(D)	(E)	(F)	I	R
1	1	1E6B30-62950	SHEET,SIDE L FRONT B	1							
2	1	1E6B30-66230	HOSE, DRAIN 8-740	1							
3	1	1E6C40-66260	ELBOW,90 1/2-1/4	2							
4	1	1E6C40-66260	ELBOW,90 1/2-1/4	2							
5	1	1E6B30-66290	HOSE, DRAIN 16-500	1							
6	1	1E6B30-66360	COLLAR,28.5X23.3X1.9	1							
7	1	1E6B30-66370	COLLAR,23.5X19.5X1.9	1							
8	1	1E6B30-66380	O-RING, 18X2.65	1							
9	1	1E6B30-66390	O-RING, 14X2.65	1							
10	1	1E6B30-66430	JOINT, G3/8XG1/2	1							
11	2	24315-000140	O-RING, 1BP14.0	1							
12	1	1E6B30-66480	JOINT ASSY, STRAINER	1							
13	1	1E6B30-66490	ADAPTER, R1/4-RC1/4	1							
14	1	1E8050-66590	NIPPLE, PF1/2-20	1							
15	1	1E6C40-66760	PUMP ASSY, 9CC	1							
16	1	1E6C40-66800	PACKING, PUMP	1							
17	1	1E6C40-66830	HOSE,HYD.08-700	1							
18	1	1E6C40-66850	HOSE,HYD.06-1690	1							
19	1	1E6C40-66860	HOSE,HYD.04-2940	1							
20	1	1E6C40-66870	HOSE,DRAIN 12-450	1							
21	1	1E6C40-66890	RUBBER,HOSE PROTECT	1							
22	1	1E6C40-66930	HOSE,HYD.08-870	2							
23	1	1E6C40-69150	JOINT ASSY,G3/4-26	1							
24	2	24315-000240	O-RING, 1BP24.0	1							
25	1	172141-76900	CONNECTOR ASSY, 1/2L	1							
26	2	24315-000180	O-RING, 1BP18.0	1							
27	1	1E8559-84960	BAND, WIRE LOCK 250	3							
28	1	1E8559-84960	BAND, WIRE LOCK 250	2							
29	1	1E8330-85530	ELBOW, 90 3/8	1							
30	1	23000-022000	CLAMP, 22	2							
31	1	23000-028000	CLAMP, 28	2							
32	1	23000-035000	CLAMP, 35	2							
33	1	23393-020000	JOINT, 90RGI-1/4	1							
34	1	23393-030000	JOINT, 90RGI-3/8	1							
35	1	23394-030000	JOINT, 45RGI-3/8	1							
35-1	1	23393-030000	JOINT, 90RGI-3/8	1						N	
	(A=F800063)										
36	1	26216-080202	STUD, M8X 20	2							
37	1	26306-080002	NUT, M8	2							

N:Old $\xleftarrow[\text{No}]{\text{Yes}}$ New, Q:Old $\xleftarrow[\text{Yes}]{\text{No}}$ New, R:Old $\xleftarrow[\text{Yes}]{\text{Yes}}$ New, S:Old $\xleftarrow[\text{No}]{\text{No}}$ New, W:Add, Z:Discontinued, F:Interchangeable by set, K:Q'ty Change

Copyright (C) 2018 YANMAR CO., LTD. All RightsReserved.

Fig.112. PIPING(H.S.T.)

(A)=AW70GV,RSX(F)-IN (D)=
(B)= (E)=
(C)= (F)=

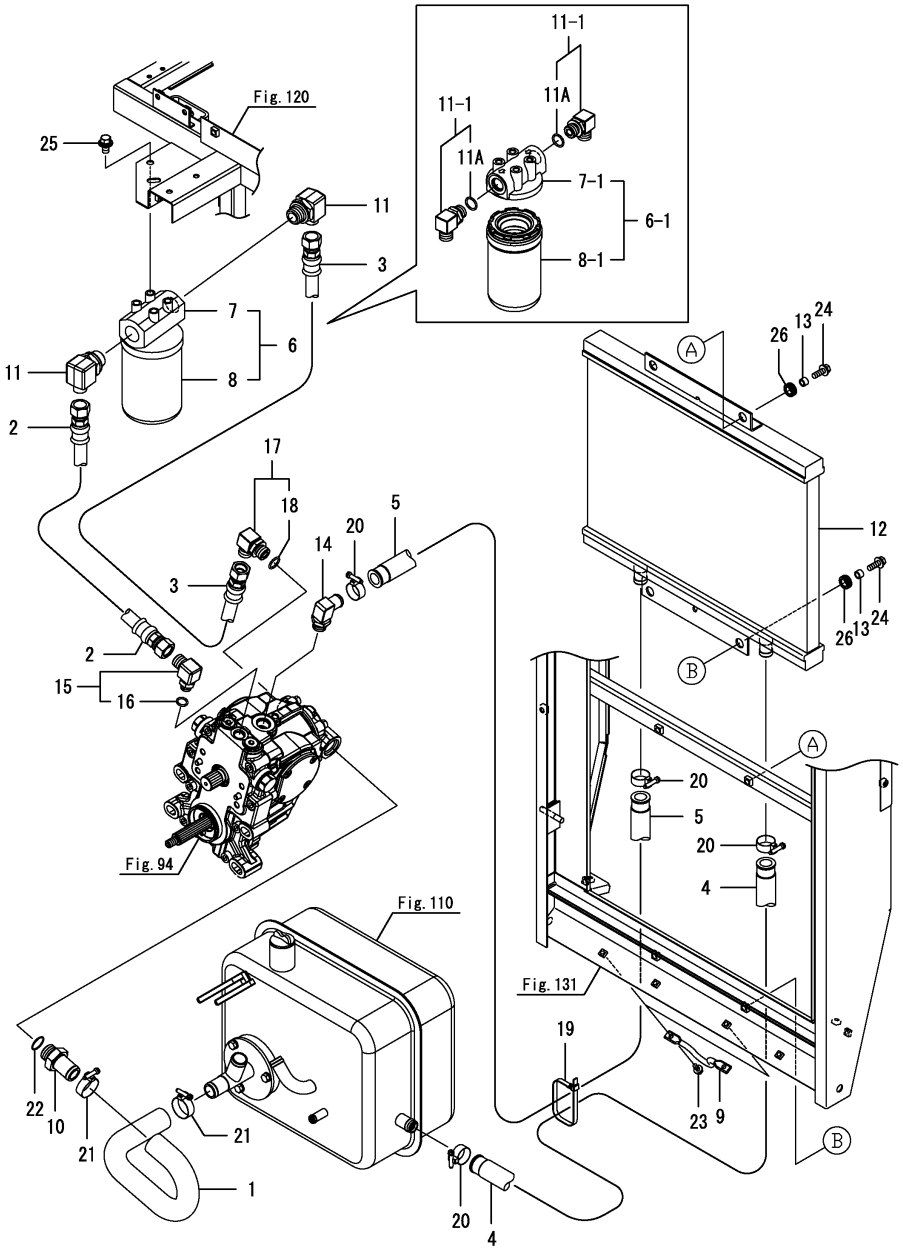

No.	Lev.	Parts No.	Description	Q'ty (A)	(B)	(C)	(D)	(E)	(F)	I	R
1	1	1E6C40-66200	HOSE, SUCTION	1							
2	1	1E6B30-66220	HOSE, HYD. 08-270	1							
3	1	1E6B30-66260	HOSE, HYD. 08-600	1							
4	1	1E6C40-66300	HOSE,DRAIN 12-750	1							
5	1	1E6C40-66310	HOSE,DRAIN 12-930	1							
6	1	1E8560-66350	FILTER ASSY, HP	1							
6-1	1	1E6C43-66350	FILTER ASSY	1						F	1
	(A=F800033)										
7	2	1E8560-66360	HEAD ASSY, FILTER	1							
7-1	2	1E6C43-66360	HEAD ASSY	1						F	1
	(A=F800033)										
8	2	1E8560-66370	ELEMENT ASSY	1							
8-1	2	1E6C80-66030	CARTRIDGE ASSY	1						F	1
	(A=F800033)										
9	1	1E6C40-66390	GUIDE, HOSE	2							
10	1	1E6B30-66450	JOINT, G3/4-26	1							
11	1	1E9110-66490	ELBOW, 3/4-1/2	2							
11-1	1	172141-76900	CONNECTOR ASSY, 1/2L	2						F	1
	(A=F800033)										
11A	2	24315-000180	O-RING, 1BP18.0	2						W	1
	(A=F800033)										
12	1	1E6C40-66700	COOLER,OIL 333X490	1							
13	1	1E8540-66770	COLLAR, 8X12X8	4							
14	1	1E8559-66770	ELBOW, 1/2-20	1							
15	1	172645-76570	CONNECTOR ASSY	1							
16	2	24315-000140	O-RING, 1BP14.0	1							
17	1	172141-76900	CONNECTOR ASSY, 1/2L	1							
18	2	24315-000180	O-RING, 1BP18.0	1							
19	1	1E8559-84960	BAND, WIRE LOCK 250	1							
20	1	23000-028000	CLAMP, 28	4							
21	1	23000-035000	CLAMP, 35	2							
22	1	24315-000240	O-RING, 1BP24.0	1							
23	1	26014-060162	BOLT, M6X 16	4							
24	1	26014-080252	BOLT, M8X 25	4							
25	1	26014-100202	BOLT, M10X 20	2							
26	1	29311-124000	GROMET, 12.0X4	4							

Remarks
(1)No.6-1, 7-1, 8-1, 11-1 & 11A interchangeable by set.

N:Old $\overset{\text{Yes}}{\underset{\text{No}}{\leftrightarrow}}$ New, Q:Old $\overset{\text{No}}{\underset{\text{Yes}}{\leftrightarrow}}$ New, R:Old $\overset{\text{Yes}}{\underset{\text{Yes}}{\leftrightarrow}}$ New, S:Old $\overset{\text{No}}{\underset{\text{No}}{\leftrightarrow}}$ New, W:Add, Z:Discontinued, F:Interchangeable by set, K:Q'ty Change

Copyright (C) 2018 YANMAR CO., LTD. All RightsReserved.

Fig.113. CONTROL VALVE

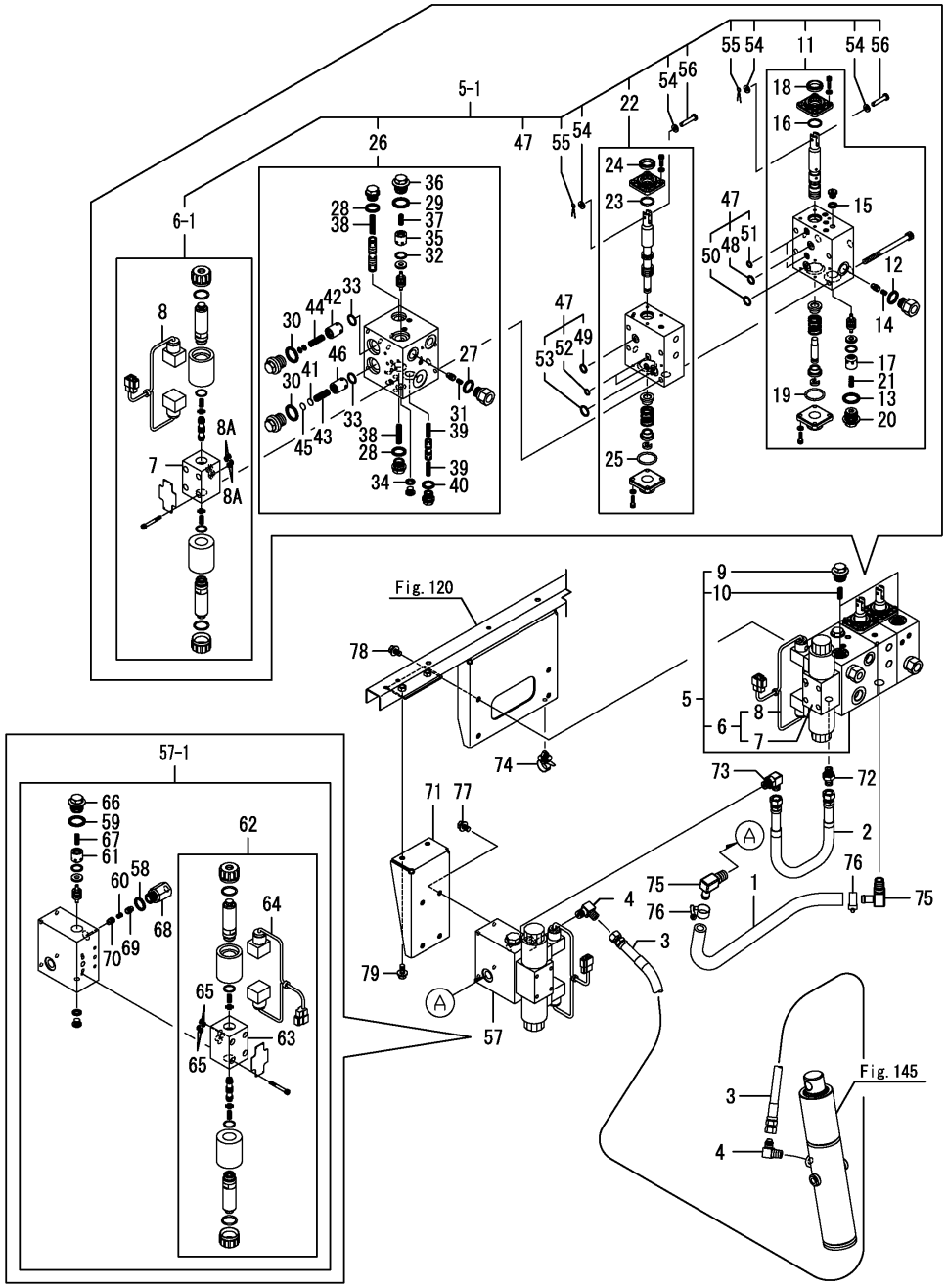

(A)=AW70GV,RSX(F)-IN (D)=
(B)= (E)=
(C)= (F)=

No.	Lev.	Parts No.	Description	Q'ty (A)	(B)	(C)	(D)	(E)	(F)	I	R
1	1	1E6C41-66210	HOSE,DRAIN 08-440	1							
2	1	1E6C41-66230	HOSE, HYD.04-420	1							
3	1	1E6C42-66260	HOSE,HYD.04-6200	1							
4	1	1E8559-67030	ELBOW 90	2							
5	1	1E6B31-66500	VALVE, CONTROL	1							
5-1	1	1E6C41-66500	VALVE,CONTROL	1							R
	(A=F800034)										
6	2	1E6B30-66510	SOLENOID ASSY, VALVE	1							
6-1	2	1E6B30-66511	SOLENOID ASSY,VALVE	1							N
	(A=F800034)										
7	3	1E6B30-66520	SOLENOID, VALVE	1							
8	3	1E6B30-66530	HARNESS,VALVE	1							
8A	3	1E6B30-66560	O-RING,9.25X1.78	4							W
	(A=F800034)										
9	2	1E6B30-66610	PLUG, 22	2							Z
	(A=F800034)										
10	2	1E6B30-66620	SPRING, 1.0X7.5X19	2							Z
	(A=F800034)										
11	2	1E6B30-66070	VALVE, REAPING	1							W
	(A=F800034)										
12	3	1E6B30-66130	WASHER, SEAL 18	1							W
	(A=F800034)										
13	3	1E6B30-66140	WASHER, SEAL 22	1							W
	(A=F800034)										
14	3	1E6B30-66180	SPRING,0.6X6.5X16	1							W
	(A=F800034)										
15	3	1E6B30-66340	WASHER, SEAL 10	1							W
	(A=F800034)										
16	3	1E6B30-66350	O-RING,19.8X2.4	1							W
	(A=F800034)										
17	3	1E6B30-66470	VALVE ASSY, CHECK	1							W
	(A=F800034)										
18	3	1E6B30-66540	SEAL, OIL20X28X6	1							W
	(A=F800034)										
19	3	1E6B30-66570	O-RING,29.4X3.1	1							W
	(A=F800034)										
20	3	1E6B30-66610	PLUG, 22	1							W
	(A=F800034)										
21	3	1E6B30-66620	SPRING, 1.0X7.5X19	1							W
	(A=F800034)										
22	2	1E6B31-66080	VALVE, ACTUATOR	1							W
	(A=F800034)										
23	3	1E6B30-66350	O-RING,19.8X2.4	1							W
	(A=F800034)										
24	3	1E6B30-66540	SEAL, OIL20X28X6	1							W
	(A=F800034)										
25	3	1E6B30-66570	O-RING,29.4X3.1	1							W
	(A=F800034)										
26	2	1E6B31-66090	VALVE, REEL	1							W
	(A=F800034)										
27	3	1E6B30-66130	WASHER, SEAL 18	1							W

N:Old $\xleftarrow[\text{No}]{\text{Yes}}$ New, Q:Old $\xleftarrow[\text{Yes}]{\text{No}}$ New, R:Old $\xleftarrow[\text{Yes}]{\text{Yes}}$ New, S:Old $\xleftarrow[\text{No}]{\text{No}}$ New, W:Add, Z:Discontinued, F:Interchangeable by set, K:Q'ty Change

++ CONTINUE ++

Copyright (C) 2018 YANMAR CO., LTD. All RightsReserved.

Fig.113. CONTROL VALVE

(A)=AW70GV,RSX(F)-IN (D)=
(B)= (E)=
(C)= (F)=

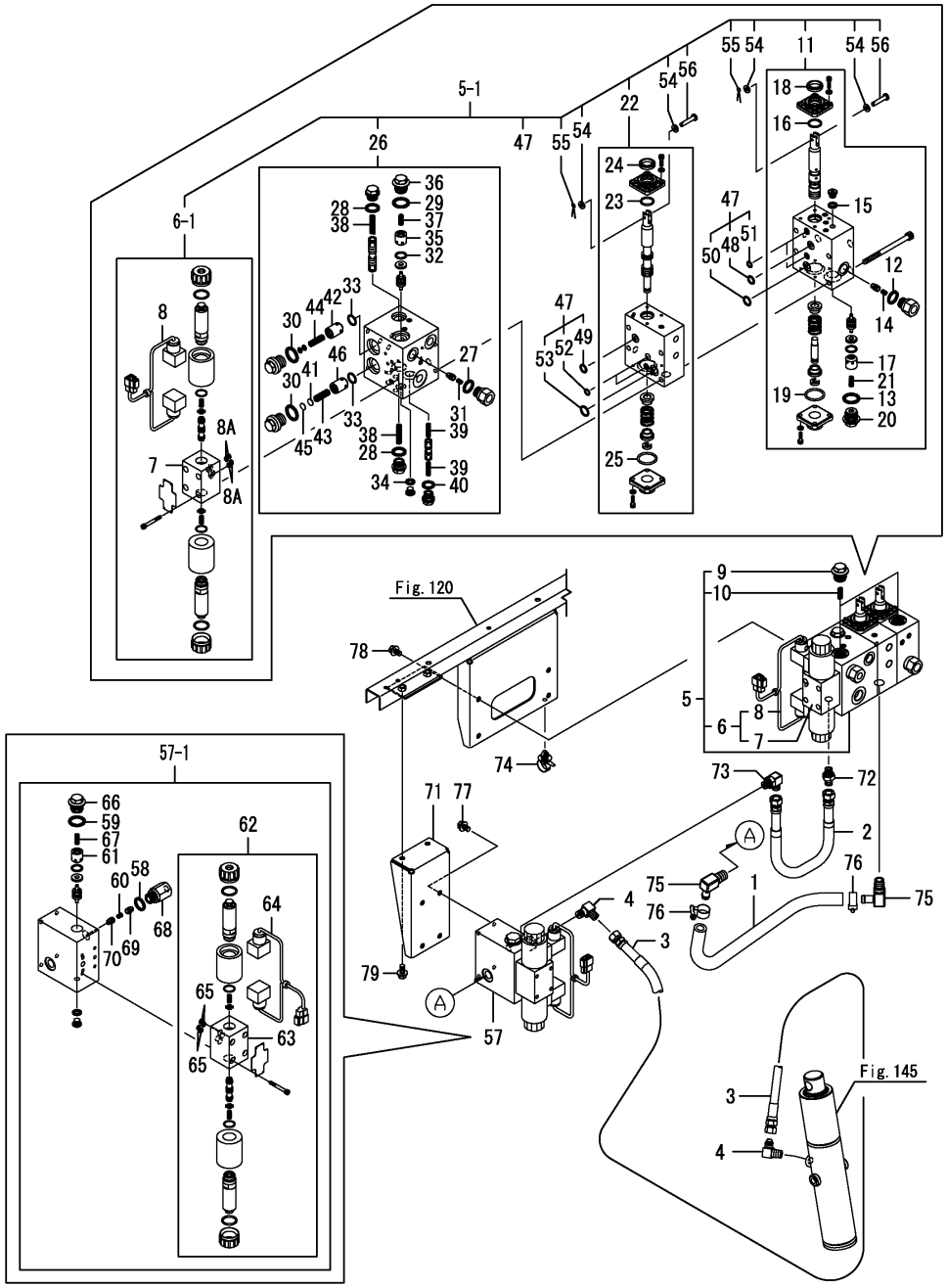

No.	Lev.	Parts No.	Description	Q'ty (A)	(B)	(C)	(D)	(E)	(F)	I	R
		(A=F800034)									
28	3	1E6B30-66130	WASHER, SEAL 18	2						W	
		(A=F800034)									
29	3	1E6B30-66140	WASHER, SEAL 22	1						W	
		(A=F800034)									
30	3	1E6B30-66140	WASHER, SEAL 22	2						W	
		(A=F800034)									
31	3	1E6B30-66180	SPRING,0.6X6.5X16	1						W	
		(A=F800034)									
32	3	1E6B30-66330	O-RING,15.8X2.4	1						W	
		(A=F800034)									
33	3	1E6B30-66330	O-RING,15.8X2.4	2						W	
		(A=F800034)									
34	3	1E6B30-66340	WASHER, SEAL 10	1						W	
		(A=F800034)									
35	3	1E6B30-66470	VALVE ASSY, CHECK	1						W	
		(A=F800034)									
36	3	1E6B30-66610	PLUG, 22	1						W	
		(A=F800034)									
37	3	1E6B30-66620	SPRING, 1.0X7.5X19	1						W	
		(A=F800034)									
38	3	1E6B30-66720	SPRING,0.8X9X58	2						W	
		(A=F800034)									
39	3	1E6B30-66730	SPRING,0.8X7.3X39	2						W	
		(A=F800034)									
40	3	1E6B30-66740	WASHER, SEAL 16	1						W	
		(A=F800034)									
41	3	1E6B30-66750	SHIM,MAIN RELIEF 1.0	1						W	
		(A=F800034)									
42	3	1E6B30-66760	VALVE ASSY, RELIEF	1						W	
		(A=F800034)									
43	3	1E6B30-66790	SPRING,2.5X11X33	1						W	
		(A=F800034)									
44	3	1E6B30-66870	SPRING,2X10X33	1						W	
		(A=F800034)									
45	3	1E6B30-66950	SHIM,MAIN RELIEF 0.5	1						W	
		(A=F800034)									
46	3	1E6B30-67130	VALVE ASSY, RELIEF	1						W	
		(A=F800034)									
47	2	1E6B30-67300	O-RING KIT,VALVE	1						W	
		(A=F800034)									
48	3	1E6B30-66100	O-RING,16X2.4	1						W	
		(A=F800034)									
49	3	1E6B30-66100	O-RING,16X2.4	1						W	
		(A=F800034)									
50	3	1E6B30-66110	O-RING,18X2.4	1						W	
		(A=F800034)									
51	3	1E6B30-66120	O-RING,12X1.9	2						W	
		(A=F800034)									
52	3	1E6B30-66120	O-RING,12X1.9	2						W	
		(A=F800034)									

N:Old $\overset{\text{Yes}}{\underset{\text{No}}{\leftrightarrows}}$ New, Q:Old $\overset{\text{No}}{\underset{\text{Yes}}{\leftrightarrows}}$ New, R:Old $\overset{\text{Yes}}{\underset{\text{Yes}}{\leftrightarrows}}$ New, S:Old $\overset{\text{No}}{\underset{\text{No}}{\leftrightarrows}}$ New, W:Add, Z:Discontinued, F:Interchangeable by set, K:Q'ty Change

++ CONTINUE ++

Copyright (C) 2018 YANMAR CO., LTD. All RightsReserved.

Fig.113. CONTROL VALVE

(A)=AW70GV,RSX(F)-IN (D)=
(B)= (E)=
(C)= (F)=

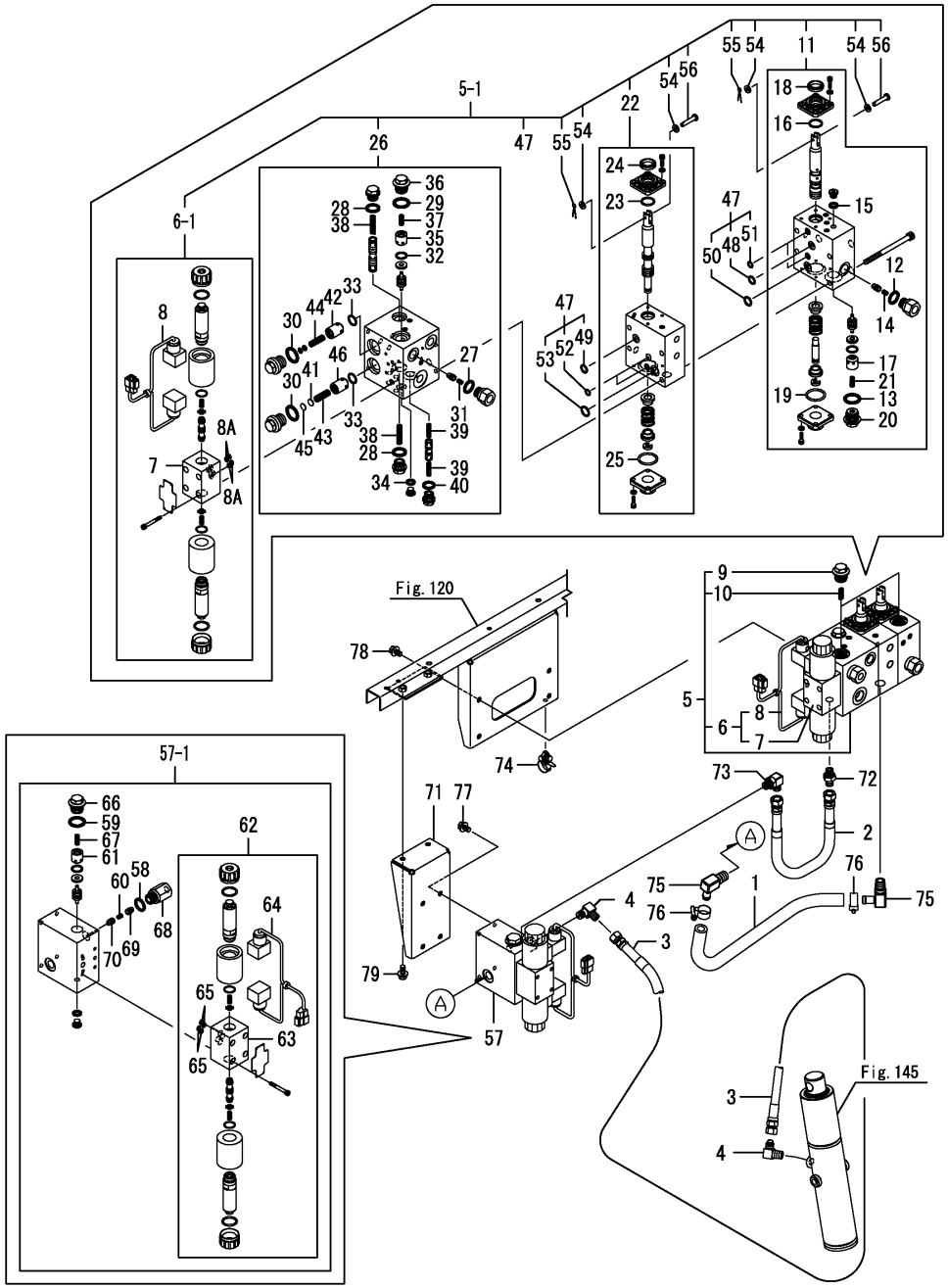

No.	Lev.	Parts No.	Description	Q'ty (A)	(B)	(C)	(D)	(E)	(F)	I	R
53	3	1E6B30-66580	O-RING,20X2.4	1						W	
	(A=F800034)										
54	2	22137-050000	WASHER, 5	4						W	
	(A=F800034)										
55	2	22417-160160	PIN, COTTER 1.6X16	2						W	
	(A=F800034)										
56	2	22487-050220	PIN, H 5X 22	2						W	
	(A=F800034)										
57	1	1E6C42-66550	VALVE, AUGER	1							
57-1	1	1E6C42-66600	VALVE,AUGER	1						R	
	(A=F800034)										
58	2	1E6B30-66130	WASHER, SEAL 18	1						W	
	(A=F800034)										
59	2	1E6B30-66140	WASHER, SEAL 22	1						W	
	(A=F800034)										
60	2	1E6B30-66180	SPRING,0.6X6.5X16	1						W	
	(A=F800034)										
61	2	1E6B30-66470	VALVE ASSY, CHECK	1						W	
	(A=F800034)										
62	2	1E6B31-66510	SOLENOID ASSY,VALVE	1						W	
	(A=F800034)										
63	3	1E6B30-66520	SOLENOID, VALVE	1						W	
	(A=F800034)										
64	3	1E6B31-66530	HARNESS,VALVE	1						W	
	(A=F800034)										
65	3	1E6B30-66560	O-RING,9.25X1.78	4						W	
	(A=F800034)										
66	2	1E6B30-66610	PLUG, 22	1						W	
	(A=F800034)										
67	2	1E6B30-66620	SPRING, 1.0X7.5X19	1						W	
	(A=F800034)										
68	2	1E6C42-66650	VALVE, BODY THROTTLE	1						W	
	(A=F800034)										
69	2	1E6C42-66660	VALVE, THROTTLE 1.0	1						W	
	(A=F800034)										
70	2	1E6C42-66670	VALVE, THROTTLE 1.2	1						W	
	(A=F800034)										
71	1	1E6B31-72560	STAY, VALVE B	1							
72	1	1C726C-76210	FITTING, 1/4	1							
73	1	1C726C-76220	O-RING, ELBOW 1/4	1							
74	1	1E9265-84300	CLIP, BAND	1							
75	1	1E8330-85530	ELBOW, 90 3/8	2							
76	1	23000-022000	CLAMP, 22	2							
77	1	26014-080162	BOLT, M8X 16	4							
78	1	26014-080162	BOLT, M8X 16	4							
79	1	26014-080202	BOLT, M8X 20	2							

N:Old $\xleftarrow[\text{No}]{\text{Yes}}$ New, Q:Old $\xleftarrow[\text{Yes}]{\text{No}}$ New, R:Old $\xleftarrow[\text{Yes}]{\text{Yes}}$ New, S:Old $\xleftarrow[\text{No}]{\text{No}}$ New, W:Add, Z:Discontinued, F:Interchangeable by set, K:Q'ty Change

Copyright (C) 2018 YANMAR CO., LTD. All RightsReserved.

Fig.114. TRAVEL ACTUATOR

(A)=AW70GV,RSX(F)-IN (D)=
(B)= (E)=
(C)= (F)=

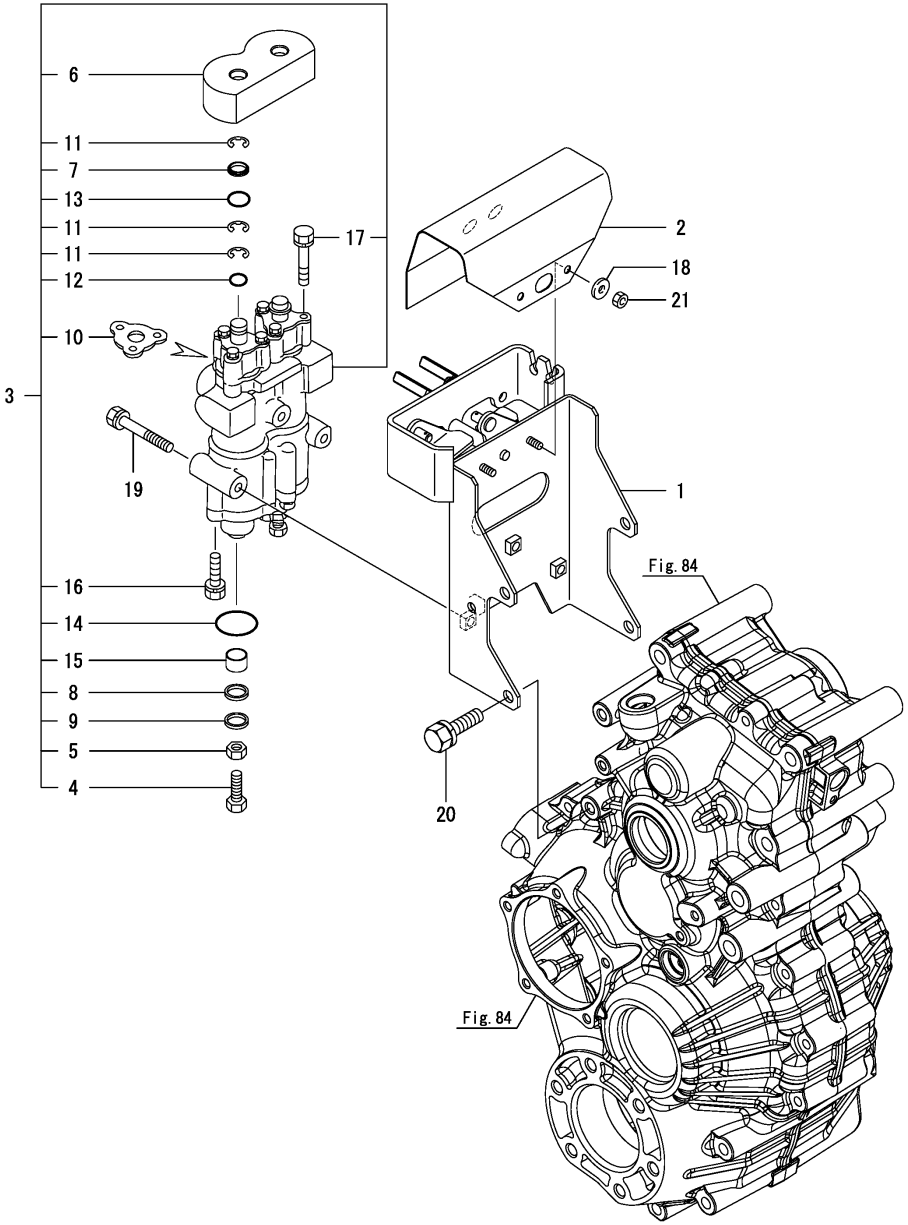

No.	Lev.	Parts No.	Description	Q'ty (A)	(B)	(C)	(D)	(E)	(F)	I	R
1	1	1E6C40-66530	BRACKET, ACTUATOR	1							
2	1	1E6C40-66771	COVER,ACTUATOR	1							
3	1	1E8230-85503	ACTUATOR ASSY	1							
4	2	1E8230-85511	BOLT, 10X35 11T	2							
5	2	26776-100002	NUT, LOCK M10	2							
6	2	1683J3-02200	BOOTS	1							
7	2	172510-74410	SEAL, DUST	2							
8	2	1E8230-85520	SEAL, PENTA	2							
9	2	1E8230-85530	SCRAPER, 16	2							
10	2	1E8230-85540	PACKING	2							
11	2	22272-000090	RING, E- 9	6							
12	2	24311-000100	O-RING, 1AP10.0	2							
13	2	24311-000140	O-RING, 1AP14.0	2							
14	2	24321-000350	O-RING, 1AG35.0	2							
15	2	24550-016120	BUSH, 16X12	2							
16	2	26016-060252	BOLT, M6X 25	6							
17	2	26016-060402	BOLT, M6X 40	6							
18	1	22157-060000	WASHER, 6	2							
19	1	26013-080702	BOLT, M8X 70	3							
20	1	26013-100252	BOLT, M10X 25	4							
21	1	26717-060002	NUT, M6	2							

N:Old $\overset{\text{Yes}}{\underset{\text{No}}{\leftrightarrow}}$ New, Q:Old $\overset{\text{No}}{\underset{\text{Yes}}{\leftrightarrow}}$ New, R:Old $\overset{\text{Yes}}{\underset{\text{Yes}}{\leftrightarrow}}$ New, S:Old $\overset{\text{No}}{\underset{\text{No}}{\leftrightarrow}}$ New, W:Add, Z:Discontinued, F:Interchangeable by set, K:Q'ty Change

Copyright (C) 2018 YANMAR CO., LTD. All RightsReserved.

Fig.115. HYDRAULIC CYLINDER

(A)=AW70GV,RSX(F)-IN (D)=
(B)= (E)=
(C)= (F)=

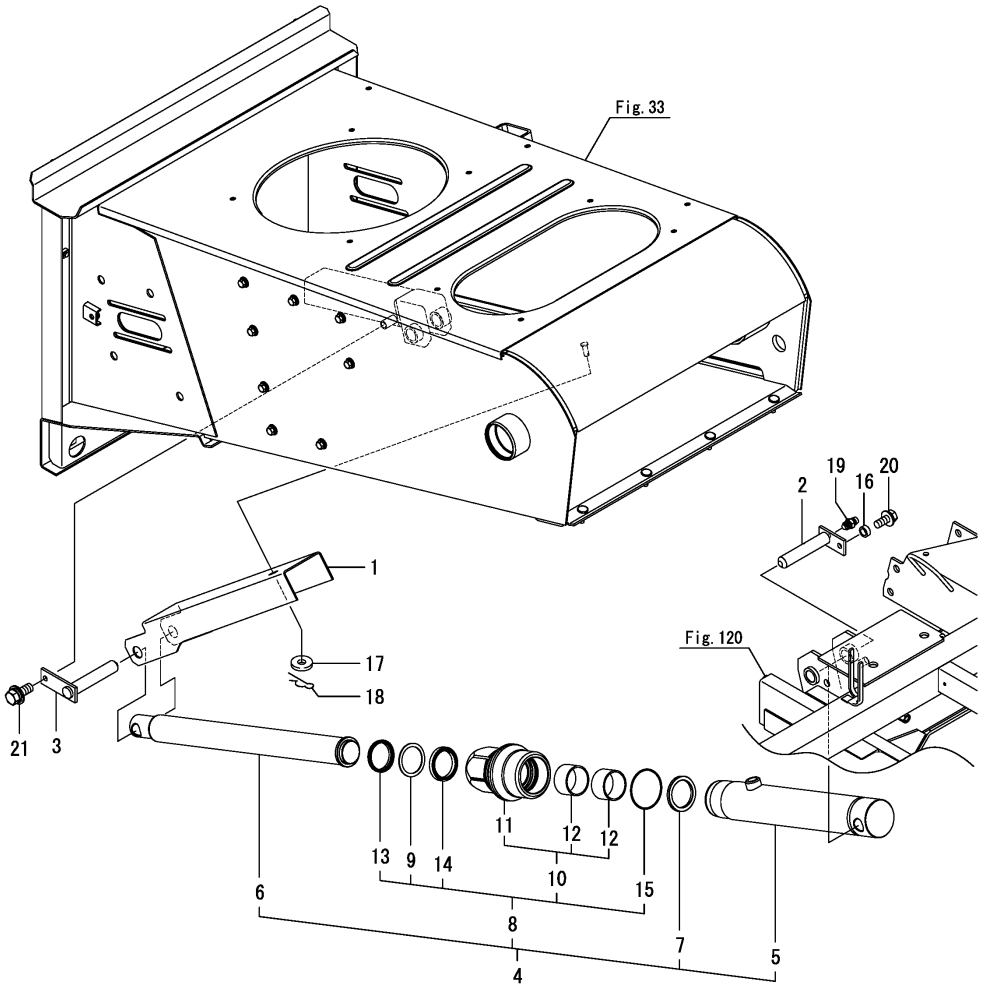

No.	Lev.	Parts No.	Description	Q'ty (A)	(B)	(C)	(D)	(E)	(F)	I	R
1	1	1E6C43-67210	STOPPER,CYLINDER	1							
1-1	1	1E6C43-67201	STOPPER ASSY,CYLIND.	1						N	
	(A=*2018.10)										
2	1	1E6B30-67231	PIN,CYLINDER FULCRUM	1							
3	1	1E6C40-67260	PIN,CYLINDER	1							
4	1	1E6C40-67800	CYLINDER, PF	1							
5	2	1E6C40-67410	TUBE ASSY	1							
6	2	1E6B30-67450	ROD ASSY	1							
7	2	1E6B30-67490	COLLAR, 45.8X59X5	1							
8	2	1E6B30-67810	BRACKET ASSY, SEAL	1							
9	3	1E6B30-67500	RING, BACK UP	1							
10	3	1E6B30-67820	BRACKET ASSY,ROD	1							
11	4	1E6B30-67570	BRACKET,ROD	1							
12	4	24550-045300	BUSH, 45X30	2							
13	3	1E6B30-67830	SCRAPER, 45	1							
14	3	1E8300-94780	PACKING RNY-45A	1							
15	3	24325-000600	O-RING, 1BG60.0	1							
16	1	1E8559-75030	SPACER, 5	1							
17	1	22157-080000	WASHER, 8	1							
18	1	22372-080000	PIN, SNAP 8	1							
19	1	24761-060000	NIPPLE, GREASE MT6X1	1							
20	1	26014-080202	BOLT, M8X 20	1							
21	1	26014-080202	BOLT, M8X 20	1							

N:Old $\frac{\text{Yes}}{\text{No}}$ New, Q:Old $\frac{\text{No}}{\text{Yes}}$ New, R:Old $\frac{\text{Yes}}{\text{Yes}}$ New, S:Old $\frac{\text{No}}{\text{No}}$ New, W:Add, Z:Discontinued, F:Interchangeable by set, K:Q'ty Change

Copyright (C) 2018 YANMAR CO., LTD. All RightsReserved.

Fig.116. STEP FRAME

(A)=AW70GV,RSX(F)-IN
(B)=
(C)=
(D)=
(E)=
(F)=

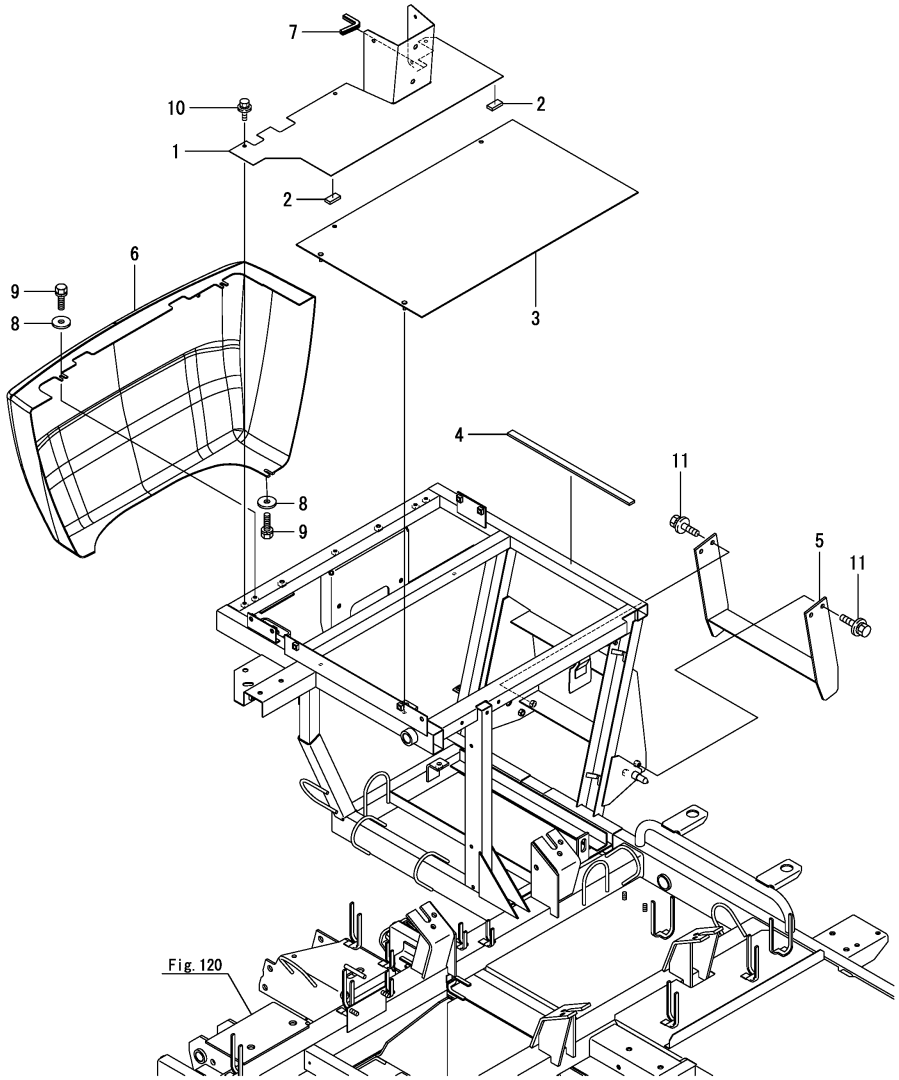

No.	Lev.	Parts No.	Description	Q'ty (A)	(B)	(C)	(D)	(E)	(F)	I	R
1	1	1E6C40-68051	FLOOR ASSY,FRONT	1							
2	1	1E8550-68060	TAPE, SOFT 10X20X4	2							
3	1	1E6B30-68101	FLOOR, REAR	1							
4	1	1E8559-68160	SEAL, STEP PLATE	1							
5	1	1E6C45-68200	STEP ASSY,SIDE UNDER	1							
5-1	1	1E6C45-68200-1	STEP ASSY,SIDE UNDER	1						S	1
	(A=*2018.12)										
6	1	1E6C43-68350	COVER,STEP	1							
7	1	1E6B31-94180	RUBBER,EDGE GUARD 50	1							
8	1	22157-060000	WASHER, 6	3							
9	1	26013-060162	BOLT, M6X 16	3							
10	1	26014-060122	BOLT, M6X 12	3							
11	1	26014-080202	BOLT, M8X 20	4							

Remarks
(1)Painting color=No.5 : YANMAR NAVY GRAY, No.5-1 : CATION E-COATING BLACK.

N:Old $\xleftrightarrow[\text{No}]{\text{Yes}}$ New, Q:Old $\xleftrightarrow[\text{Yes}]{\text{No}}$ New, R:Old $\xleftrightarrow[\text{Yes}]{\text{Yes}}$ New, S:Old $\xleftrightarrow[\text{No}]{\text{No}}$ New, W:Add, Z:Discontinued, F:Interchangeable by set, K:Q'ty Change

Copyright (C) 2018 YANMAR CO., LTD. All RightsReserved.

Fig.117. SEAT

(A)=AW70GV,RSX(F)-IN
(B)=
(C)=
(D)=
(E)=
(F)=

No.	Lev.	Parts No.	Description	Q'ty (A)	(B)	(C)	(D)	(E)	(F)	I	R
1	1	1E6B00-68100	SEAT ASSY, OPERATOR	1							
2	1	22217-080000	WASHER, SPRING 8	4							
3	1	26717-080002	NUT, M8	4							

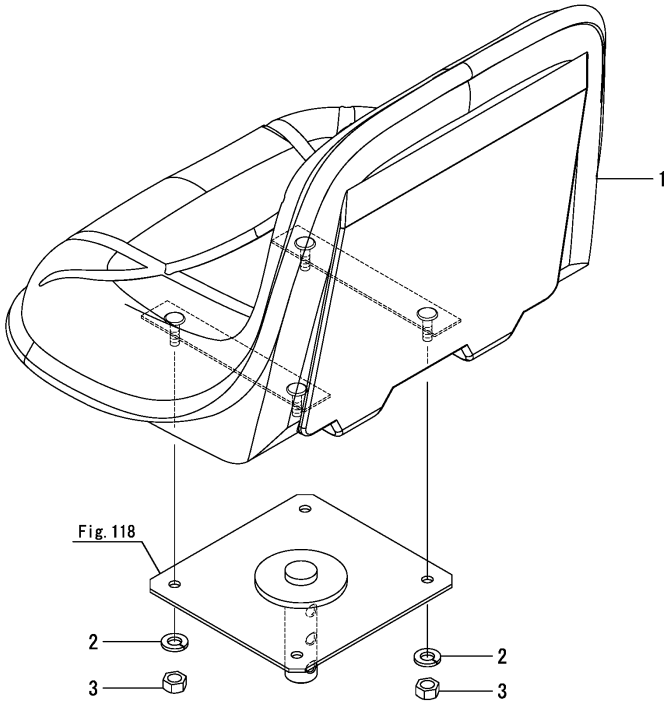

N:Old $\xleftrightarrow[\text{No}]{\text{Yes}}$ New, Q:Old $\xleftrightarrow[\text{Yes}]{\text{No}}$ New, R:Old $\xleftrightarrow[\text{Yes}]{\text{Yes}}$ New, S:Old $\xleftrightarrow[\text{No}]{\text{No}}$ New, W:Add, Z:Discontinued, F:Interchangeable by set, K:Q'ty Change

Copyright (C) 2018 YANMAR CO., LTD. All RightsReserved.

Fig.118. SEAT MOUNT

(A)=AW70GV,RSX(F)-IN (D)=
(B)= (E)=
(C)= (F)=

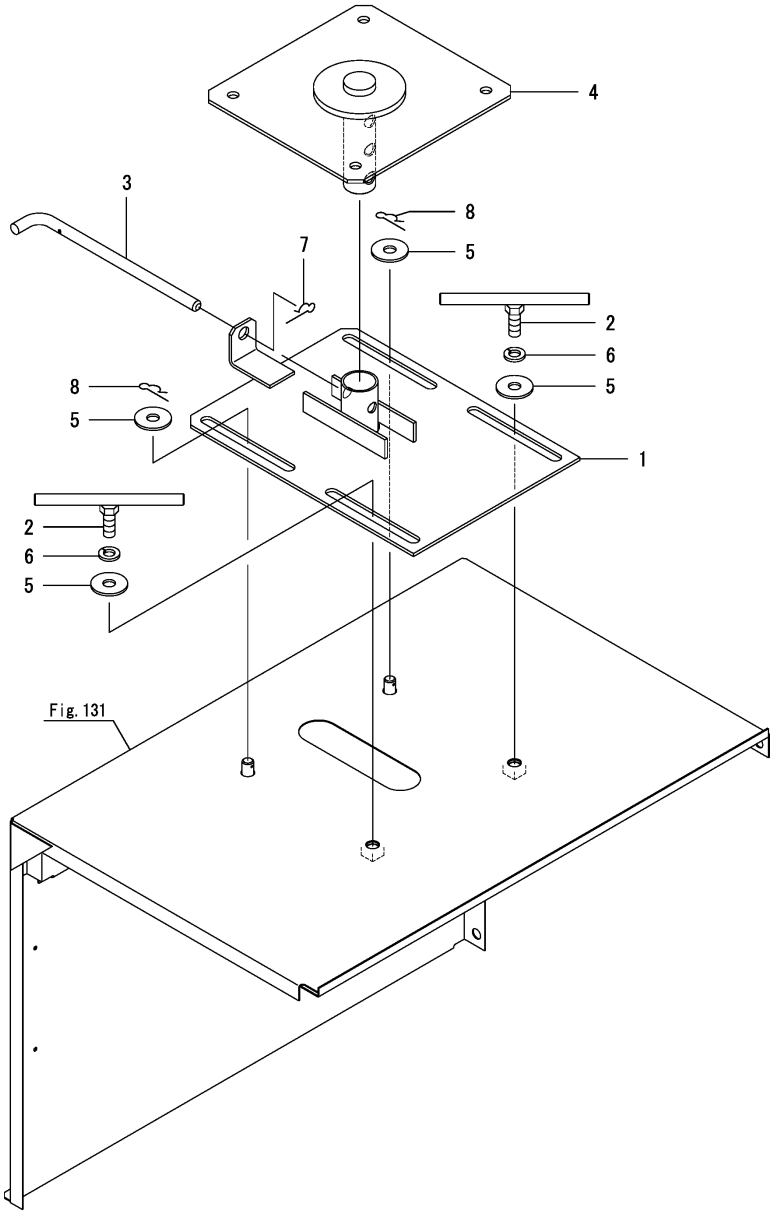

No.	Lev.	Parts No.	Description	Q'ty (A)	(B)	(C)	(D)	(E)	(F)	I	R
1	1	1E6B30-68401-2	SEAT,OPERATOR B	1							
1-1	1	1E6C80-68900	SEAT, OPERATOR B	1						R	
	(A=*2018.09)										
2	1	1E6B00-68500	BOLT, M10X25	2							
3	1	1E6B30-68501	PIN, 10	1							
3-1	1	1E6C80-68930	PIN,10	1						R	
	(A=*2018.09)										
4	1	1E6B30-68602-1	SEAT,OPERATOR A	1							
5	1	22157-100000	WASHER, 10	4							
6	1	22217-100000	WASHER, SPRING 10	2							
7	1	22372-100000	PIN, SNAP 10	1							
8	1	22372-100000	PIN, SNAP 10	2							

N:Old $\xleftrightarrow[\text{No}]{\text{Yes}}$ New, Q:Old $\xleftrightarrow[\text{Yes}]{\text{No}}$ New, R:Old $\xleftrightarrow[\text{Yes}]{\text{Yes}}$ New, S:Old $\xleftrightarrow[\text{No}]{\text{No}}$ New, W:Add, Z:Discontinued, F:Interchangeable by set, K:Q'ty Change

Copyright (C) 2018 YANMAR CO., LTD. All RightsReserved.

Fig.119. SUNVISOR

(A)=AW70GV,RSX(F)-IN
(B)=
(C)=
(D)=
(E)=
(F)=

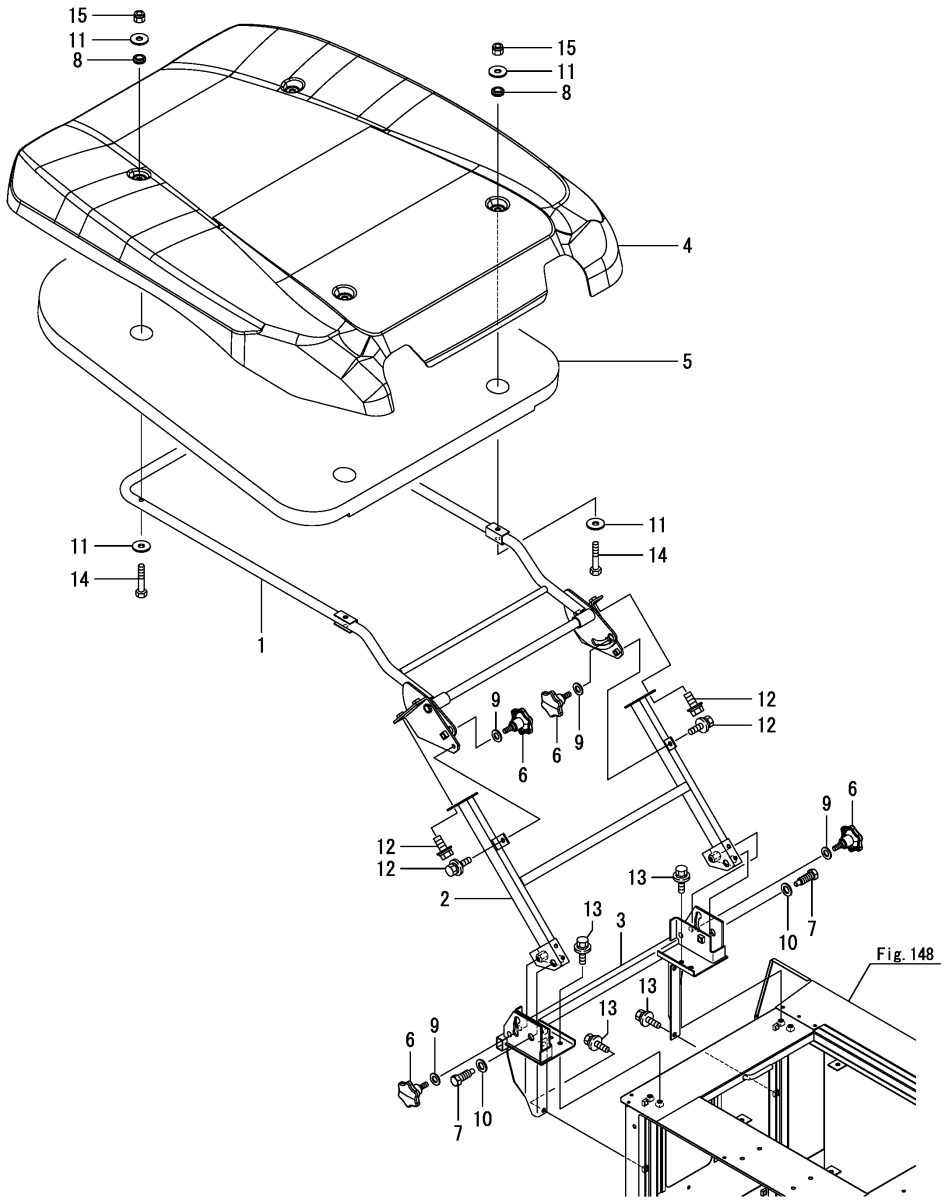

No.	Lev.	Parts No.	Description	Q'ty (A)	(B)	(C)	(D)	(E)	(F)	I	R
1	1	1E6B30-69002	FRAME, SUN VISOR	1							
2	1	1E6B30-69200	FRAME, VISOR	1							
3	1	1E6B31-69301	BASE,VISOR G	1							
4	1	1E6C80-69500	SUN VISOR	1							
5	1	1E6C40-69550	SHEET,SUN VISOR	1							
6	1	1E6B30-69950	SCREW, KNOB M10X20	4							
7	1	1E6B30-69960	BOLT, STEPPED 16X36	2							
8	1	1E6B30-69970	GROMMET, 10X2	4							
9	1	22137-140000	WASHER, 14	4							
10	1	22137-160000	WASHER, 16	2							
11	1	22157-080000	WASHER, 8	8							
12	1	26014-080202	BOLT, M8X 20	6							
13	1	26014-080202	BOLT, M8X 20	8							
14	1	26116-080452	BOLT, M8X 45 PLATED	4							
15	1	26347-080002	NUT, M8	4							

N:Old $\xleftarrow[\text{No}]{\text{Yes}}$ New, Q:Old $\xleftarrow[\text{Yes}]{\text{No}}$ New, R:Old $\xleftarrow[\text{Yes}]{\text{Yes}}$ New, S:Old $\xleftarrow[\text{No}]{\text{No}}$ New, W:Add, Z:Discontinued, F:Interchangeable by set, K:Q'ty Change

Copyright (C) 2018 YANMAR CO., LTD. All RightsReserved.

Fig.120. CHASSIS FRAME

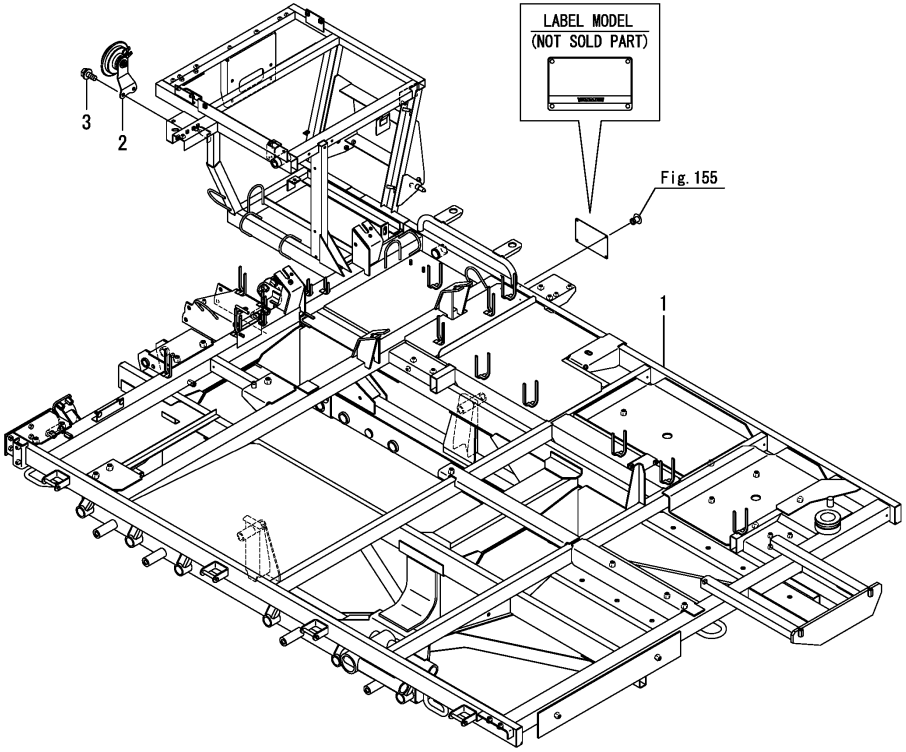

(A)=AW70GV,RSX(F)-IN (D)=
(B)= (E)=
(C)= (F)=

No.	Lev.	Parts No.	Description	Q'ty (A)	(B)	(C)	(D)	(E)	(F)	I	R
1	1	1E6C49-71000	FRAME,CHASSIS GRV	1							
1-1	1	1E6C49-71001	FRAME,CHASSIS GRV	1						N	
	(A=F800269)										
1-2	1	1E6C49-71002	FRAME,CHASSIS GRV	1						R	
	(A=*2018.09)										
2	1	7E6150-83301	HORN ASSY	1							
3	1	26014-060162	BOLT, M6X 16	2							

N:Old ◄Yes/No► New, Q:Old ◄No/Yes► New, R:Old ◄Yes/Yes► New, S:Old ◄No/No► New, W:Add, Z:Discontinued, F:Interchangeable by set, K:Q'ty Change

Copyright (C) 2018 YANMAR CO., LTD. All RightsReserved.

Fig.121. WEIGHT

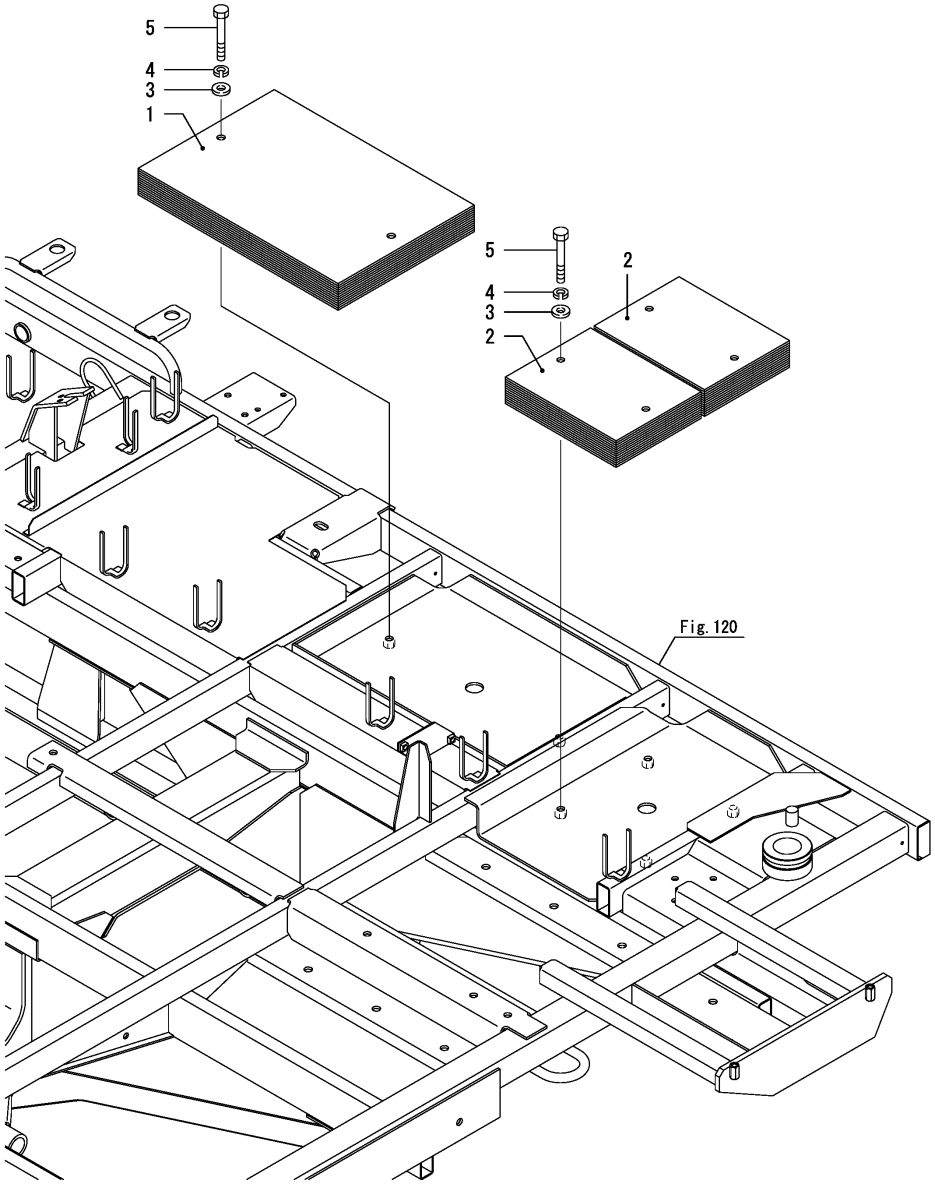

(A)=AW70GV,RSX(F)-IN (D)=
(B)= (E)=
(C)= (F)=

No.	Lev.	Parts No.	Description	Q'ty (A)	(B)	(C)	(D)	(E)	(F)	I	R
1	1	1E6C46-73400	WEIGHT, 5.3	12							
2	1	1E6B30-73440	WEIGHT, 1.8A	24							
3	1	22137-120000	WASHER, 12	6							
4	1	22217-120000	WASHER, SPRING 12	6							
5	1	26116-120802	BOLT, M12X 80 PLATED	6							

N:Old $\xleftrightarrow[\text{No}]{\text{Yes}}$ New, Q:Old $\xleftrightarrow[\text{Yes}]{\text{No}}$ New, R:Old $\xleftrightarrow[\text{Yes}]{\text{Yes}}$ New, S:Old $\xleftrightarrow[\text{No}]{\text{No}}$ New, W:Add, Z:Discontinued, F:Interchangeable by set, K:Q'ty Change

Copyright (C) 2018 YANMAR CO., LTD. All RightsReserved.

Fig.122. TRANSMISSION MOUNT

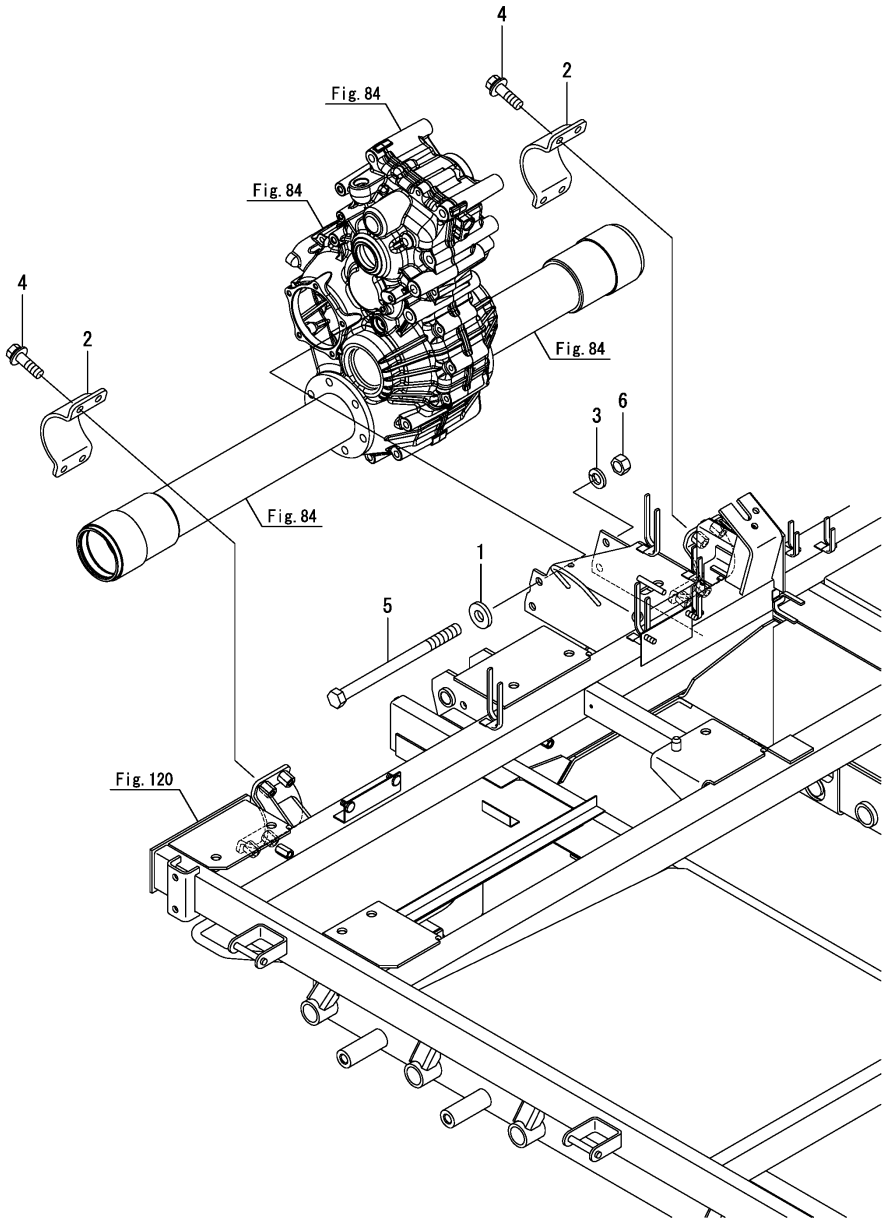

(A)=AW70GV,RSX(F)-IN (D)=
(B)= (E)=
(C)= (F)=

No.	Lev.	Parts No.	Description	Q'ty (A)	(B)	(C)	(D)	(E)	(F)	I	R
1	1 (A=*2018.09)	1E8559-12500	WASHER, 12X28X4.5	2						Z	
2	1	1E6C40-72710	HOLDER,AXLE	2							
3	1	22217-120000	WASHER, SPRING 12	2							
4	1	26014-100352	BOLT 10X35	8							
5	1	26116-121702	BOLT, M12X170 PLATED	2							
6	1	26717-120002	NUT, M12	2							
6-1	1 (A=*2018.09)	26367-120002	NUT, M12	2						N	

N:Old $\xleftarrow[\text{No}]{\text{Yes}}$ New, Q:Old $\xleftarrow[\text{Yes}]{\text{No}}$ New, R:Old $\xleftarrow[\text{Yes}]{\text{Yes}}$ New, S:Old $\xleftarrow[\text{No}]{\text{No}}$ New, W:Add, Z:Discontinued, F:Interchangeable by set, K:Q'ty Change

Copyright (C) 2018 YANMAR CO., LTD. All RightsReserved.

Fig.123. IDLER

(A)=AW70GV,RSX(F)-IN (D)=
(B)= (E)=
(C)= (F)=

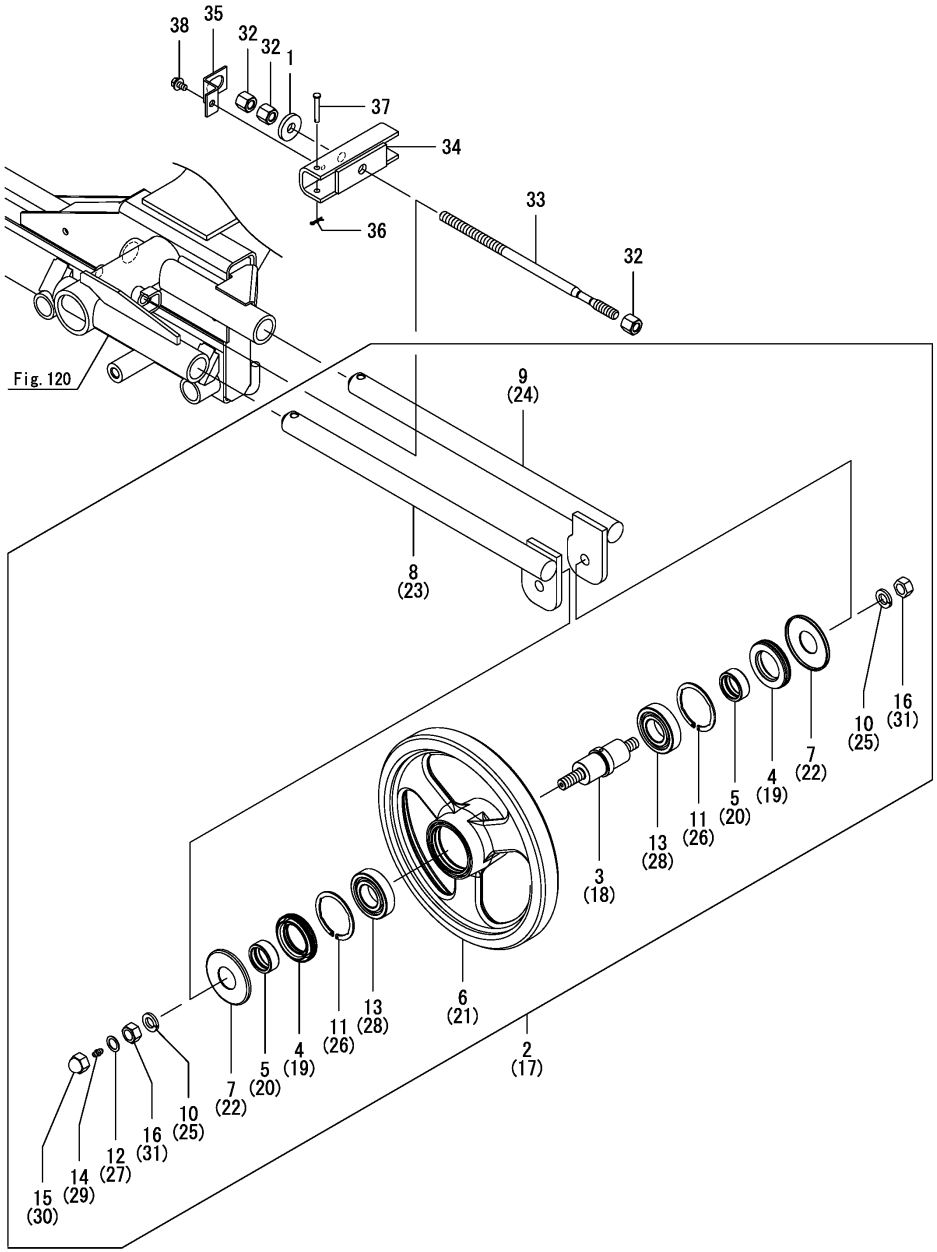

No.	Lev.	Parts No.	Description	Q'ty (A)	(B)	(C)	(D)	(E)	(F)	I	R
1	1	1E9060-51720	WASHER, 15X40X6	2							
2	1	7E6C45-73000	IDLER ASSY,VL	1							
3	2	1E6C40-73020	SHAFT,IDLER	1							
4	2	1E6680-73031	SEAL, 45X72X12	2							
5	2	1E6680-73040	SLEEVE, 35X45X17	2							
6	2	1E6C45-73060	IDLER,335	1							
7	2	1E6C40-73080	COVER,DUST 81	2							
8	2	1E6C40-73152	METAL,IDLER A	1							
9	2	1E6C40-73162	METAL,IDLER B	1							
10	2	22212-160000	SPRING WAHER 16	2							
11	2	22252-000721	RING, 72	2							
12	2	23414-160000	GASKET, 16X1.0	1							
13	2	24101-062074	BEARING, BALL 6207	2							
14	2	24761-060000	NIPPLE, GREASE MT6X1	1							
15	2	26677-160002	NUT, CAP 16	1							
16	2	26737-160002	NUT, M16	2							
17	1	7E6C45-73010	IDLER ASSY,VR	1							
18	2	1E6C40-73020	SHAFT,IDLER	1							
19	2	1E6680-73031	SEAL, 45X72X12	2							
20	2	1E6680-73040	SLEEVE, 35X45X17	2							
21	2	1E6C45-73060	IDLER,335	1							
22	2	1E6C40-73080	COVER,DUST 81	2							
23	2	1E6C40-73152	METAL,IDLER A	1							
24	2	1E6C40-73162	METAL,IDLER B	1							
25	2	22212-160000	SPRING WAHER 16	2							
26	2	22252-000721	RING, 72	2							
27	2	23414-160000	GASKET, 16X1.0	1							
28	2	24101-062074	BEARING, BALL 6207	2							
29	2	24761-060000	NIPPLE, GREASE MT6X1	1							
30	2	26677-160002	NUT, CAP 16	1							
31	2	26737-160002	NUT, M16	2							
32	1	1E8380-73020	NUT, HIGH M14	6							
33	1	1E9060-73031	BOLT, TENSION 350	2							
33-1	1	1E9060-73032	BOLT,TENSION 350	2							R
	(A=*2018.09)										
34	1	1E6B30-73040-1	BRACKET, TENSION	2							
35	1	1E9060-73050	STOPPER	2							
36	1	22372-060000	PIN, SNAP 6	2							
37	1	22487-060400	PIN 6X 40	2							
38	1	26014-080162	BOLT, M8X 16	2							

N:Old $\overset{\text{Yes}}{\underset{\text{No}}{\leftrightarrow}}$ New, Q:Old $\overset{\text{No}}{\underset{\text{Yes}}{\leftrightarrow}}$ New, R:Old $\overset{\text{Yes}}{\underset{\text{Yes}}{\leftrightarrow}}$ New, S:Old $\overset{\text{No}}{\underset{\text{No}}{\leftrightarrow}}$ New, W:Add, Z:Discontinued, F:Interchangeable by set, K:Q'ty Change

Copyright (C) 2018 YANMAR CO., LTD. All RightsReserved.

Fig.124. TRACK ROLLER

(A)=AW70GV,RSX(F)-IN (D)=
(B)= (E)=
(C)= (F)=

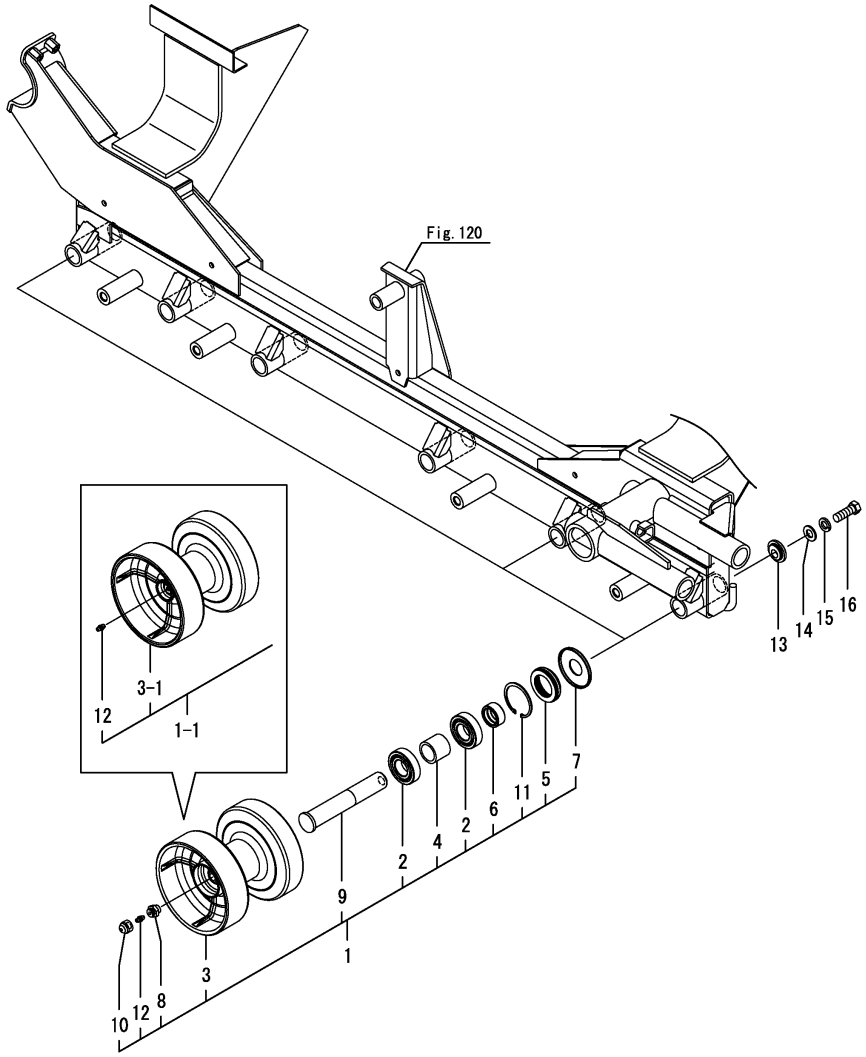

No.	Lev.	Parts No.	Description	Q'ty (A)	(B)	(C)	(D)	(E)	(F)	I	R
1	1	1E6C47-73100	ROLLER ASSY, TRACK B	6							
1-1	1	1E6C49-73100	ROLLER ASSY, TRACK B	6						N	
	(A=*2018.06)										
2	2	1E8361-35430	BEARING, 6206R	12							
3	2	1E6C47-73010	ROLLER, TRACK B	6							
3-1	2	1E6C49-73110	ROLLER, TRACK B	6						F	1
	(A=*2018.06)										
4	2	1E8559-73030	COLLAR, 31X40X34	6							
5	2	1E8559-73060	SEAL, 40X62X12	6							
6	2	1E6B30-73070	SLEEVE, 30X40X17	6							
7	2	1E8559-73080	COVER, DUSTPROOF 71	6							
8	2	1E8559-73100	BOLT, ROLLER CAP A	6						Z	1
	(A=*2018.06)										
9	2	1E6B30-73250	SHAFT, TRUCK ROLLER	6							
10	2	1E8559-73540	CAP, GREASE	6						Z	1
	(A=*2018.06)										
11	2	22252-000620	RING, 62	6							
12	2	24761-060000	NIPPLE, GREASE MT6X1	6							
13	1	1E6B30-73260	WASHER, LOCK	6							
13-1	1	1E6B30-73261	WASHER, LOCK	6						N	
	(A=*2018.06)										
14	1	22137-140000	WASHER, 14	6							
15	1	22217-140000	WASHER, SPRING 14	6							
16	1	26156-140352	BOLT, M14X 35 PLATED	6							

Remarks
(1)No.3-1, 8 & 10 interchangeable by set.

N:Old $\frac{\text{Yes}}{\text{No}}$ New, Q:Old $\frac{\text{No}}{\text{Yes}}$ New, R:Old $\frac{\text{Yes}}{\text{Yes}}$ New, S:Old $\frac{\text{No}}{\text{No}}$ New, W:Add, Z:Discontinued, F:Interchangeable by set, K:Q'ty Change

Copyright (C) 2018 YANMAR CO., LTD. All RightsReserved.

Fig.125. TRACK ROLLER

(A)=AW70GV,RSX(F)-IN (D)=
(B)= (E)=
(C)= (F)=

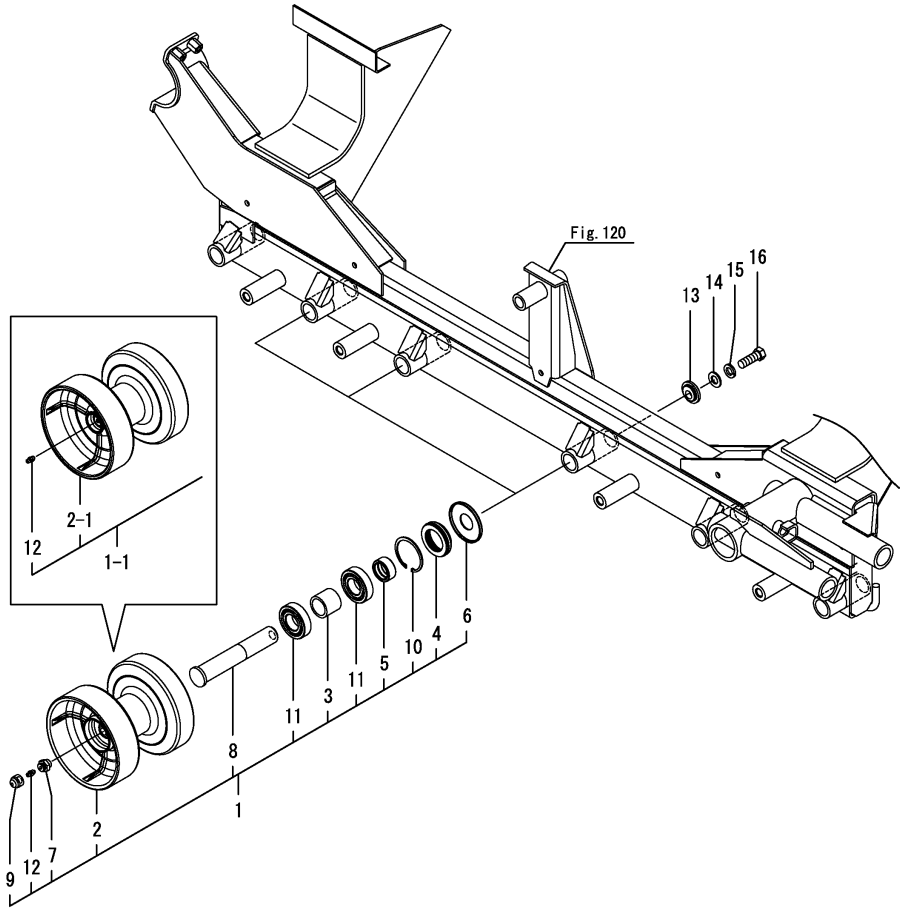

No.	Lev.	Parts No.	Description	Q'ty (A)	(B)	(C)	(D)	(E)	(F)	I	R
1	1	1E6C47-73200	ROLLER ASSY, TRACK A	6							
1-1	1	1E6C49-73200	ROLLER ASSY, TRACK A	6						N	
	(A=*2018.06)										
2	2	1E6C47-73000	ROLLER, TRACK A	6							
2-1	2	1E6C49-73210	ROLLER, TRACK A	6						F	1
	(A=*2018.06)										
3	2	1E8559-73030	COLLAR, 31X40X34	6							
4	2	1E8559-73060	SEAL, 40X62X12	6							
5	2	1E6B30-73070	SLEEVE, 30X40X17	6							
6	2	1E8559-73080	COVER, DUSTPROOF 71	6							
7	2	1E8559-73100	BOLT, ROLLER CAP A	6						Z	1
	(A=*2018.06)										
8	2	1E6B30-73250	SHAFT, TRUCK ROLLER	6							
9	2	1E8559-73540	CAP, GREASE	6						Z	1
	(A=*2018.06)										
10	2	22252-000620	RING, 62	6							
11	2	24101-062064	BEARING, BALL 6206	12							
12	2	24761-060000	NIPPLE, GREASE MT6X1	6							
13	1	1E6B30-73260	WASHER, LOCK	6							
13-1	1	1E6B30-73261	WASHER, LOCK	6						N	
	(A=*2018.06)										
14	1	22137-140000	WASHER, 14	6							
15	1	22217-140000	WASHER, SPRING 14	6							
16	1	26156-140352	BOLT, M14X 35 PLATED	6							

Remarks
(1)No.2-1, 7 & 9 interchangeable by set.

N:Old $\frac{\text{Yes}}{\text{No}}$ New, Q:Old $\frac{\text{No}}{\text{Yes}}$ New, R:Old $\frac{\text{Yes}}{\text{Yes}}$ New, S:Old $\frac{\text{No}}{\text{No}}$ New, W:Add, Z:Discontinued, F:Interchangeable by set, K:Q'ty Change

Copyright (C) 2018 YANMAR CO., LTD. All RightsReserved.

Fig.126. CRAWLER GUIDE

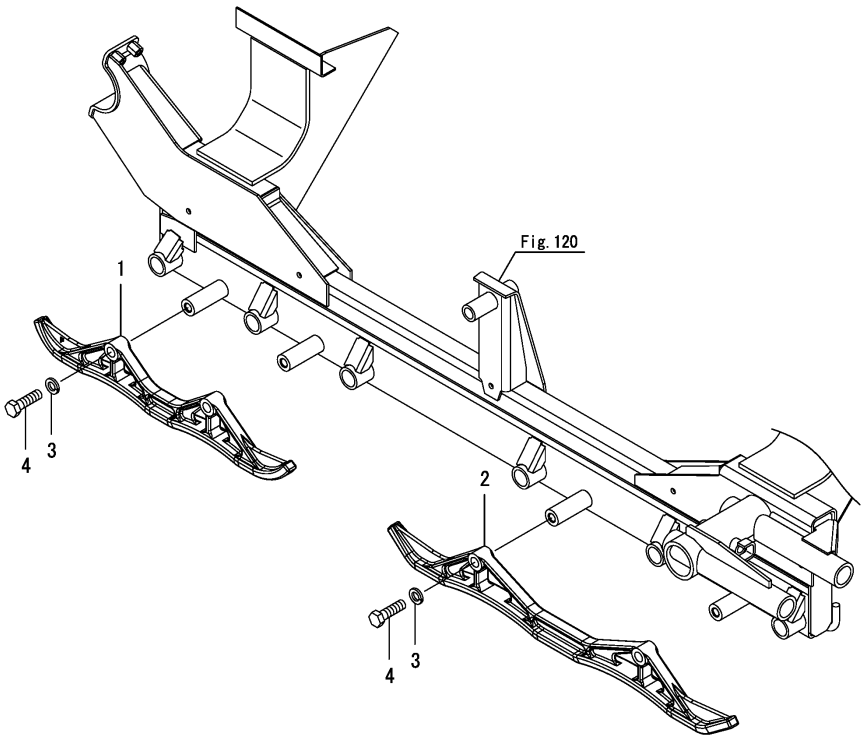

(A)=AW70GV,RSX(F)-IN (D)=
(B)= (E)=
(C)= (F)=

No.	Lev.	Parts No.	Description	Q'ty (A)	(B)	(C)	(D)	(E)	(F)	I	R
1	1	1E6C40-73500	GUIDE, CRAWLER FRONT	2							
2	1	1E6C45-73520	GUIDE, CRAWLER REAR	2							
3	1	22217-160000	WASHER, SPRING 16	8							
4	1	26156-160552	BOLT, M16X 55 PLATED	8							

N:Old ◄Yes/No► New, Q:Old ◄No/Yes► New, R:Old ◄Yes/Yes► New, S:Old ◄No/No► New, W:Add, Z:Discontinued, F:Interchangeable by set, K:Q'ty Change

Copyright (C) 2018 YANMAR CO., LTD. All RightsReserved.

Fig.127. SPROCKET

(A)=AW70GV,RSX(F)-IN (D)=
(B)= (E)=
(C)= (F)=

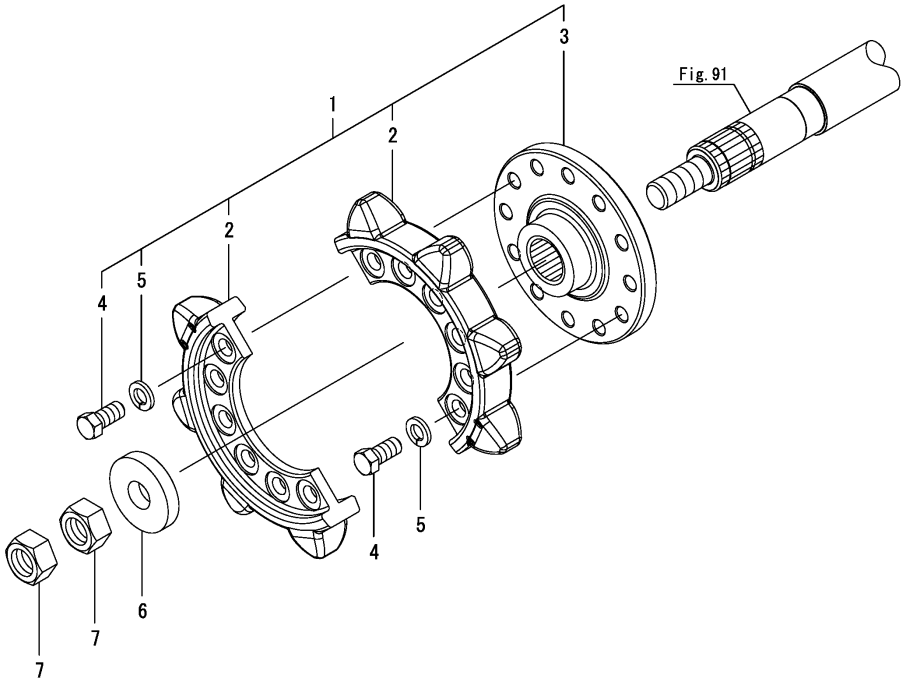

No.	Lev.	Parts No.	Description	Q'ty (A)	(B)	(C)	(D)	(E)	(F)	I	R
1	1	1E6C85-73350	SPROCKET ASSY	2							
2	2	1E6C85-73400	SPROCKET, 90-8T/2	4							
3	2	1E6C85-73410	BOSS,SPROCKET	2							
4	2	1E6A10-73420	BOLT, M14X30 10.9	24							
5	2	22217-140000	WASHER, SPRING 14	24							
6	1	1E6C40-73360	WASHER,24.5X66X12	2							
7	1	26737-240002	NUT, M24	4							

N:Old $\xleftrightarrow[\text{No}]{\text{Yes}}$ New, Q:Old $\xleftrightarrow[\text{Yes}]{\text{No}}$ New, R:Old $\xleftrightarrow[\text{Yes}]{\text{Yes}}$ New, S:Old $\xleftrightarrow[\text{No}]{\text{No}}$ New, W:Add, Z:Discontinued, F:Interchangeable by set, K:Q'ty Change

Copyright (C) 2018 YANMAR CO., LTD. All RightsReserved.

Fig.128. CARRIER ROLLER

(A)=AW70GV,RSX(F)-IN
(B)=
(C)=
(D)=
(E)=
(F)=

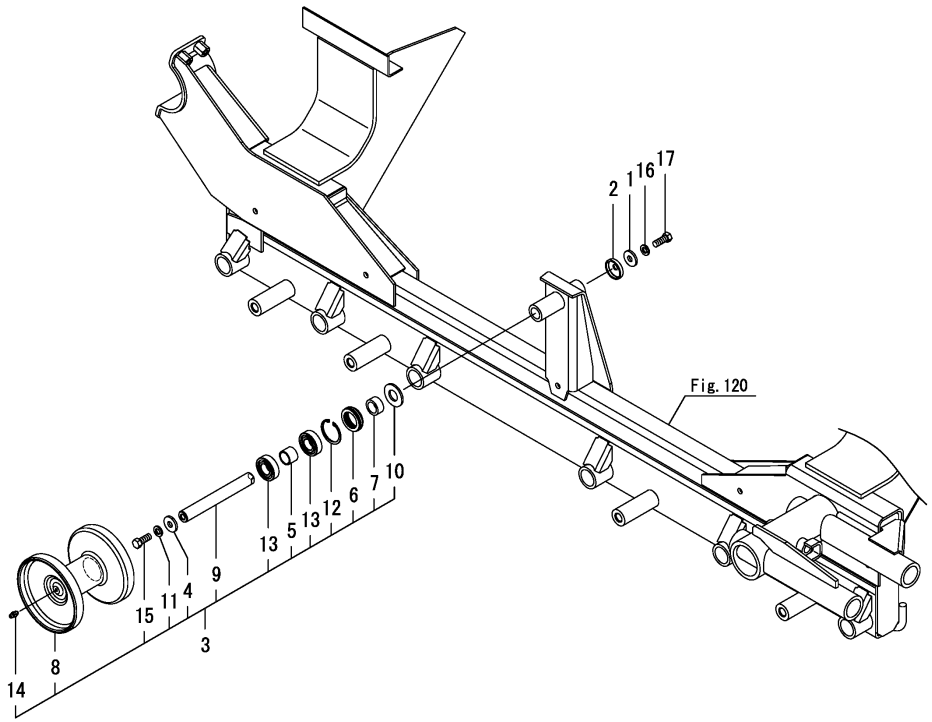

No.	Lev.	Parts No.	Description	Q'ty (A)	(B)	(C)	(D)	(E)	(F)	I	R
1	1	1E8559-17110	COLLAR, 10.5X28X3.2	2							
2	1	1E8559-73200	LOCK, ROLLER	2							
3	1	7E6C40-73500	ROLLER ASSY, CARRIER	2							
4	2	1E8559-17110	COLLAR, 10.5X28X3.2	2							
5	2	1E8559-73130	COLLAR, 20.4X25X18	2							
6	2	1E8420-73150	SEAL, DC28429	2							
7	2	1E8420-73160	SLEEVE, 20X28X13	2							
8	2	1E8559-73500	ROLLER, CARRIER 138	2							
9	2	1E8559-73530	SHAFT, ROLLER G	2							
10	2	1E8450-73770-1	PLATE, SEAL SIDE	2							
11	2	22217-100000	WASHER, SPRING 10	2							
12	2	22252-000420	RING, 42	2							
13	2	24101-060044	BEARING, BALL 6004	4							
14	2	24761-060000	NIPPLE, GREASE MT6X1	2							
15	2	26156-100252	BOLT, M10X 25 PLATED	2							
16	1	22217-100000	WASHER, SPRING 10	2							
17	1	26156-100252	BOLT, M10X 25 PLATED	2							

N:Old $\xleftrightarrow[\text{No}]{\text{Yes}}$ New, Q:Old $\xleftrightarrow[\text{Yes}]{\text{No}}$ New, R:Old $\xleftrightarrow[\text{Yes}]{\text{Yes}}$ New, S:Old $\xleftrightarrow[\text{No}]{\text{No}}$ New, W:Add, Z:Discontinued, F:Interchangeable by set, K:Q'ty Change

Copyright (C) 2018 YANMAR CO., LTD. All RightsReserved.

Fig.129. CRAWLER

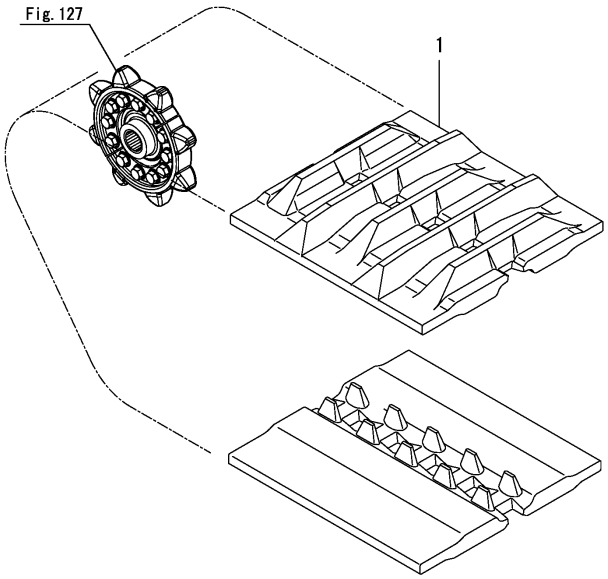

(A)=AW70GV,RSX(F)-IN (D)=
(B)= (E)=
(C)= (F)=

No.	Lev.	Parts No.	Description	Q'ty (A)	(B)	(C)	(D)	(E)	(F)	I	R
1	1	1E6C40-73950	CRAWLER, 500X54X90	2							

N:Old ◄Yes/No► New, Q:Old ◄No/Yes► New, R:Old ◄Yes/Yes► New, S:Old ◄No/No► New, W:Add, Z:Discontinued, F:Interchangeable by set, K:Q'ty Change

Copyright (C) 2018 YANMAR CO., LTD. All RightsReserved.

Fig.130. ENGINE ROOM FRAME

(A)=AW70GV,RSX(F)-IN (D)=
(B)= (E)=
(C)= (F)=

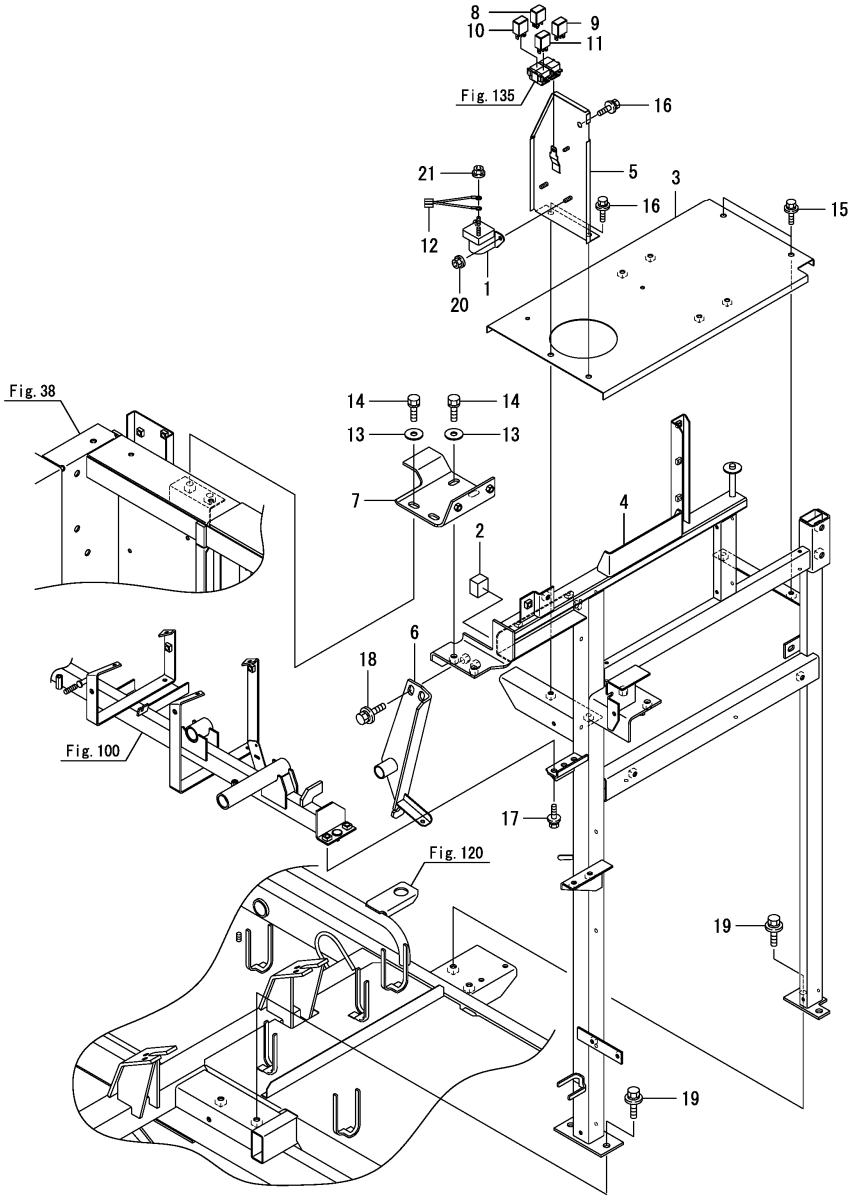

No.	Lev.	Parts No.	Description	Q'ty (A)	(B)	(C)	(D)	(E)	(F)	I	R
1	1	1E6681-05050	RELAY, MAGNETIC	1							
2	1	1E6C80-65470	SPONGE,K CLUTCH E	1							
3	1	1E6C40-75970	FRAME ASSY,ROOM REAR	1							
4	1	1E6C43-76000	FRAME, ENGINE ROOM	1							
5	1	1E6C43-76400	COVER, SIDE E.ROOM	1							
6	1	1E6C80-76400	PLATE, SUPPORT	1							
6-1	1	1E6C80-76400-1	PLATE, SUPPORT	1						S	1
	(A=*2018.08)										
7	1	1E6C80-76900	BRACKET, ED	1							
7-1	1	1E6C80-76900-1	BRACKET, ED	1						S	1
	(A=*2018.08)										
8	1	1E9256-82600	RELAY, ISO 20A	1							
9	1	1E9256-82600	RELAY, ISO 20A	1							
10	1	1E9256-82600	RELAY, ISO 20A	1							
11	1	1E9256-82600	RELAY, ISO 20A	1							
12	1	1E8450-84321	HARNESS, POWER	1							
13	1	22157-100000	WASHER, 10	4							
14	1	26013-100252	BOLT, M10X 25	4							
15	1	26014-080202	BOLT, M8X 20	2							
16	1	26014-080202	BOLT, M8X 20	3							
17	1	26014-080202	BOLT, M8X 20	2							
18	1	26014-100252	BOLT, M10X 25	2							
19	1	26014-100252	BOLT, M10X 25	4							
20	1	26367-060002	NUT, M6	2							
21	1	26367-060002	NUT, M6	2							

Remarks
(1)Painting color=No.6, 7 : YANMAR NAVY GRAY, No.6-1, 7-1 : CATION E-COATING BLACK.

N:Old $\xleftrightarrow[\text{No}]{\text{Yes}}$ New, Q:Old $\xleftrightarrow[\text{Yes}]{\text{No}}$ New, R:Old $\xleftrightarrow[\text{Yes}]{\text{Yes}}$ New, S:Old $\xleftrightarrow[\text{No}]{\text{No}}$ New, W:Add, Z:Discontinued, F:Interchangeable by set, K:Q'ty Change

Copyright (C) 2018 YANMAR CO., LTD. All RightsReserved.

Fig.131. ENGINE COVER(1)

(A)=AW70GV,RSX(F)-IN (D)=
(B)= (E)=
(C)= (F)=

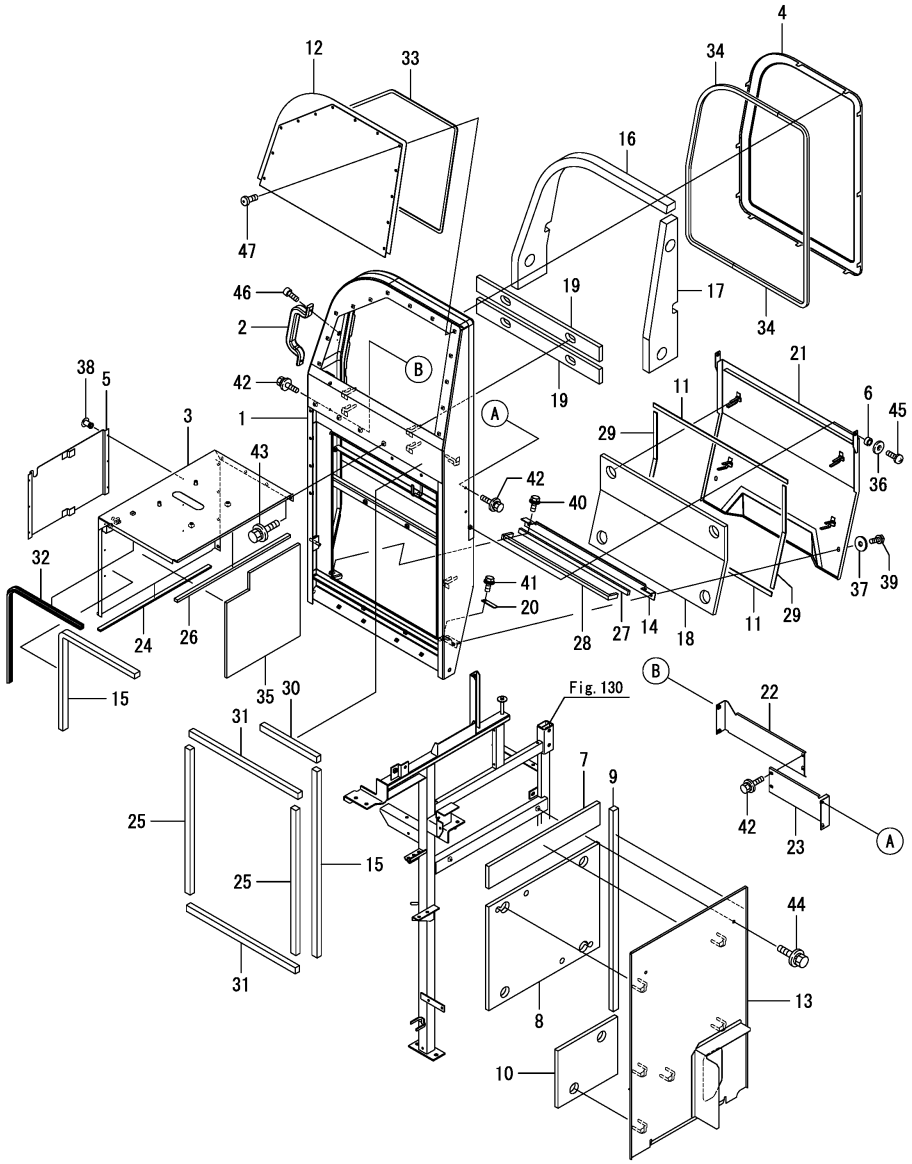

No.	Lev.	Parts No.	Description	Q'ty (A)	(B)	(C)	(D)	(E)	(F)	I	R
1	1	1E9063-75000-1	ROOM, ENGINE A	1							
2	1	1E8552-75110	HANDRAIL	1							
3	1	1E6C40-75301-1	ROOM, ENGINE B	1							
4	1	1E6C40-75381	SCREEN, DUSTPROOF	1							
5	1	1E6C40-75400-1	COVER ASSY, EROOM	1							
6	1	1E8550-75440	COLLAR, 6.5X10.5X5	2							
7	1	1E6C40-75450	SHEET,E REAR COV.UP	1							
8	1	1E6C41-75461	SHEET,ER COVER MID.	1							
9	1	1E6C40-75471	SHEET,E REAR COVER R	1							
10	1	1E6C41-75471	SHEET,ER COVER LOW	1							
11	1	1E9060-75490	SEAL, 3X15X640	2							
12	1	1E6C40-75501-1	SCREEN, BACK	1							
13	1	1E6C41-75502	COVER,ROOM REAR G	1							
14	1	1E6C40-75550-1	BRACKET,LO. COVER	1							
15	1	1E8559-75580	SEAL, 20X25X770	2							
16	1	1E6C40-75611	SHEET,E ROOM FRONT	1							
17	1	1E6C40-75621	SHEET,E ROOM REAR	1							
18	1	1E6C40-75631	SHEET,E ROOM RIGHT	1							
19	1	1E6C40-75641	SHEET,E ROOM LEFT	2							
20	1	1E6C40-75670-1	COVER,ROOM LOWER D	1							
21	1	1E6C40-75700-1	COVER,ROOM LOWER	1							
22	1	1E6C40-75750	PLATE, WIND GUIDE F	1							
22-1	1	1E6C40-75750-1	PLATE, WIND GUIDE F	1						S	1
	(A=*2018.08)										
23	1	1E6C40-75771	PLATE, WIND GUIDE R	1							
23-1	1	1E6C40-75771-1	PLATE, WIND GUIDE R	1						S	1
	(A=*2018.08)										
24	1	1E6B30-75800	SEAL, 5X15X530	1							
25	1	1E6C40-75801	SEAL, 20X25X600	2							
26	1	1E6B30-75810	SEAL, 10X15X540	1							
27	1	1E6C40-75810	SEAL, 10X15X520	1							
28	1	1E6C40-75820	SEAL, 10X15X590	1							
29	1	1E6C40-75830	SEAL, 3X15X400	2							
30	1	1E6C40-75840	SEAL, 20X25X270	1							
31	1	1E6B30-75852	SEAL, 20X25X550	2							
32	1	1E6C40-75850	SEAL, DUST 765	1							
33	1	1E6C40-75861	SEAL, 3X10X1710	1							
34	1	1E6C40-75870	SEAL, ROOM OUT SIDE	2							
35	1	1E6B30-75950	SHEET, INSULATOR	1							
36	1	22157-060000	WASHER, 6	2							
37	1	22157-060000	WASHER, 6	2							
38	1	22695-320481	RIVET, 3.2X 4.8	6							
39	1	26013-060162	BOLT, M6X 16	2							
40	1	26014-060162	BOLT, M6X 16	2							
41	1	26014-060162	BOLT, M6X 16	1							
42	1	26014-060162	BOLT, M6X 16	6							
43	1	26014-080162	BOLT, M8X 16	8							
44	1	26014-080162	BOLT, M8X 16	2							
45	1	26022-060162	SCREW, M6X16	2							
46	1	26450-060162	BOLT, M6X 16	2							
47	1	26587-060122	SCREW, M6X12	13							

Remarks
(1)Painting color=No.22, 23 : YANMAR NAVY GRAY, No.22-1, 23-1 : CATION E-COATING BLACK.

N:Old $\xleftrightarrow[\text{No}]{\text{Yes}}$ New, Q:Old $\xleftrightarrow[\text{Yes}]{\text{No}}$ New, R:Old $\xleftrightarrow[\text{Yes}]{\text{Yes}}$ New, S:Old $\xleftrightarrow[\text{No}]{\text{No}}$ New, W:Add, Z:Discontinued, F:Interchangeable by set, K:Q'ty Change

Copyright (C) 2018 YANMAR CO., LTD. All RightsReserved.

Fig.132. ENGINE COVER(2)

(A)=AW70GV,RSX(F)-IN (D)=
(B)= (E)=
(C)= (F)=

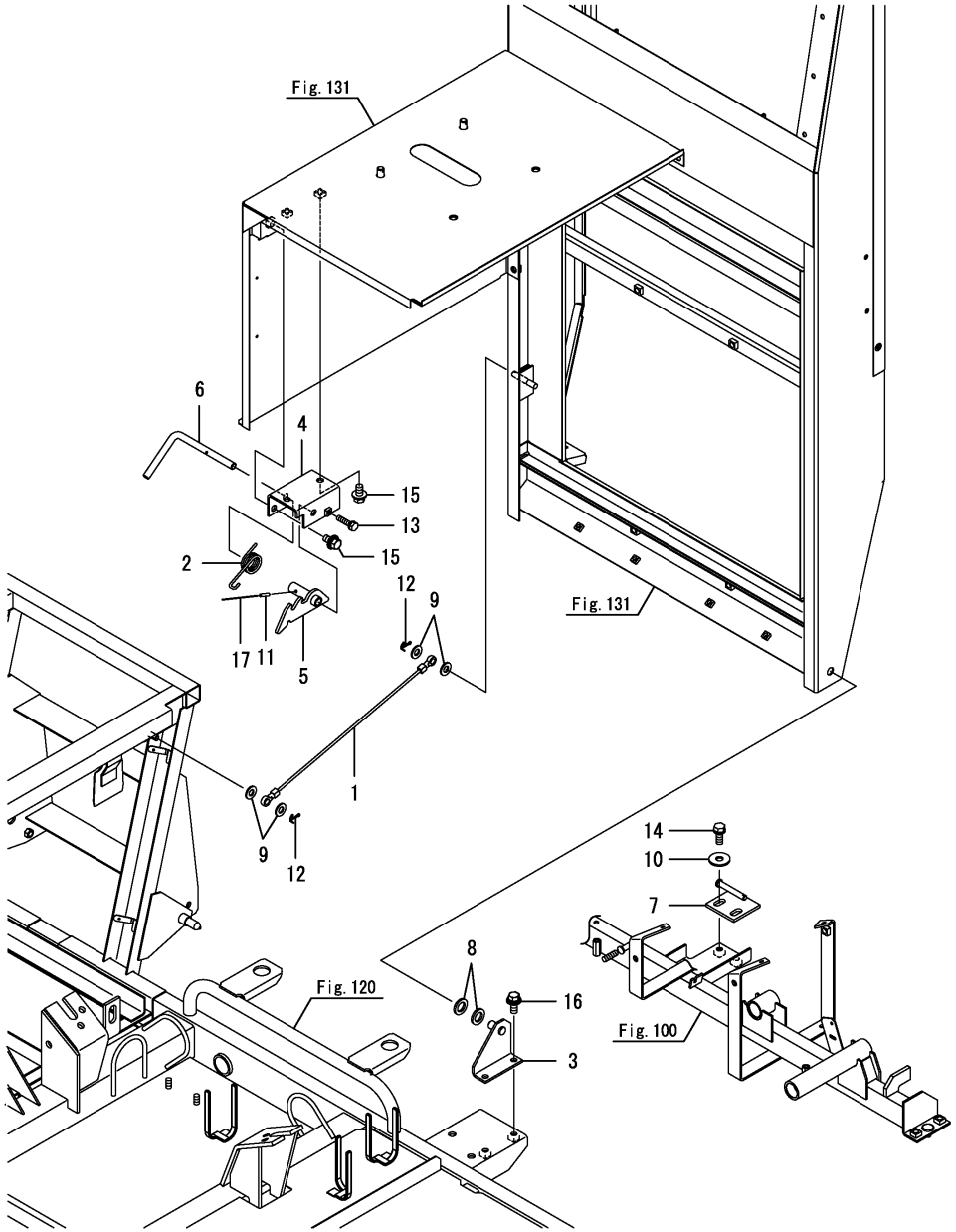

No.	Lev.	Parts No.	Description	Q'ty (A)	(B)	(C)	(D)	(E)	(F)	I	R
1	1	1E8540-35070	WIRE, STOP	1							
2	1	1E8559-75040	SPRING, LEVER RETURN	1							
3	1	1E6B30-75180	BASE, FULCRUM	1							
4	1	1E8559-75320-2	SEAT	1							
5	1	1E8559-75340	ARM, LOCK	1							
6	1	1E8559-75370	LEVER, LOCK	1							
7	1	1E8559-75390	BRACKET, LOCK	1							
8	1	22117-120000	WASHER, 12	2							
9	1	22137-080000	WASHER, 8	4							
10	1	22157-080000	WASHER, 8	2							
11	1	22351-030016	PIN, SPRING 3.0X16	1							
12	1	22417-200200	PIN, COTTER 2.0X20	2							
13	1	26013-060252	BOLT, M6X 25	1							
14	1	26013-080202	BOLT, M8X 20	2							
15	1	26014-080162	BOLT, M8X 16	3							
16	1	26014-080202	BOLT, M8X 20	2							
17	1	1E9060-63990	WIRE, 1.2X80	1						W	
	(A=F800033)										

N:Old $\xleftarrow[\text{No}]{\text{Yes}}$ New, Q:Old $\xleftarrow[\text{Yes}]{\text{No}}$ New, R:Old $\xleftarrow[\text{Yes}]{\text{Yes}}$ New, S:Old $\xleftarrow[\text{No}]{\text{No}}$ New, W:Add, Z:Discontinued, F:Interchangeable by set, K:Q'ty Change

Copyright (C) 2018 YANMAR CO., LTD. All RightsReserved.

Fig.133. MIRROR

(A)=AW70GV,RSX(F)-IN
(B)=
(C)=
(D)=
(E)=
(F)=

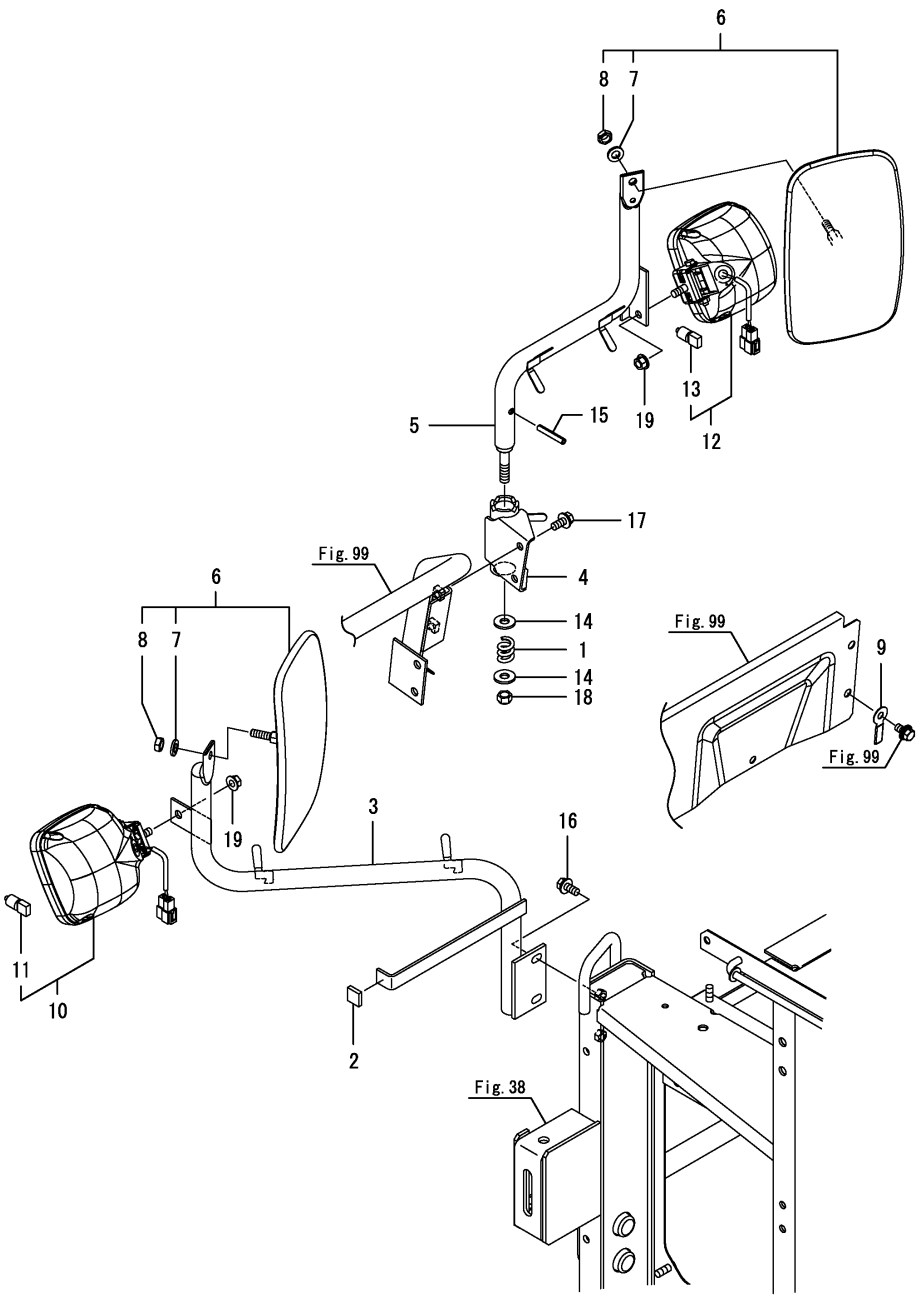

No.	Lev.	Parts No.	Description	Q'ty (A)	(B)	(C)	(D)	(E)	(F)	I	R
1	1	1E8559-18220	SPRING, 4X25	1							
2	1	1E6B30-34470	SPONGE, 5X18X18	1							
3	1	1E6B30-77101-1	STAY ASSY,MIRROR L	1							
4	1	1E6B30-77300	BASE, MIRROR AROUND	1							
5	1	1E6B30-77331	STAY ASSY, MIRROR	1							
6	1	1E8550-77400-2	MIRROR, BACK L	2							
7	2	22217-080000	WASHER, SPRING 8	2							
8	2	26757-080002	NUT, LOCK M8	2							
9	1	1E8559-81240	CLAMP, HARNESS 30	1							
10	1	1E6C40-81500	LAMP ASSY, WORK 35W	1							
11	2	1E6C40-81510	BULB,35W	1							
12	1	1E6C40-81500	LAMP ASSY, WORK 35W	1							
13	2	1E6C40-81510	BULB,35W	1							
14	1	1C730C-95590	WASHER, 10.2X24X2.5	2							
15	1	22351-060040	PIN, SPRING 6.0X40	1							
16	1	26014-080202	BOLT, M8X 20	2							
17	1	26014-080202	BOLT, M8X 20	2							
18	1	26346-100002	NUT, M10	1							
19	1	26367-080002	NUT, M8	2							

N:Old $\xleftrightarrow[\text{No}]{\text{Yes}}$ New, Q:Old $\xleftrightarrow[\text{Yes}]{\text{No}}$ New, R:Old $\xleftrightarrow[\text{Yes}]{\text{Yes}}$ New, S:Old $\xleftrightarrow[\text{No}]{\text{No}}$ New, W:Add, Z:Discontinued, F:Interchangeable by set, K:Q'ty Change

Copyright (C) 2018 YANMAR CO., LTD. All RightsReserved.

Fig.134. BATTERY

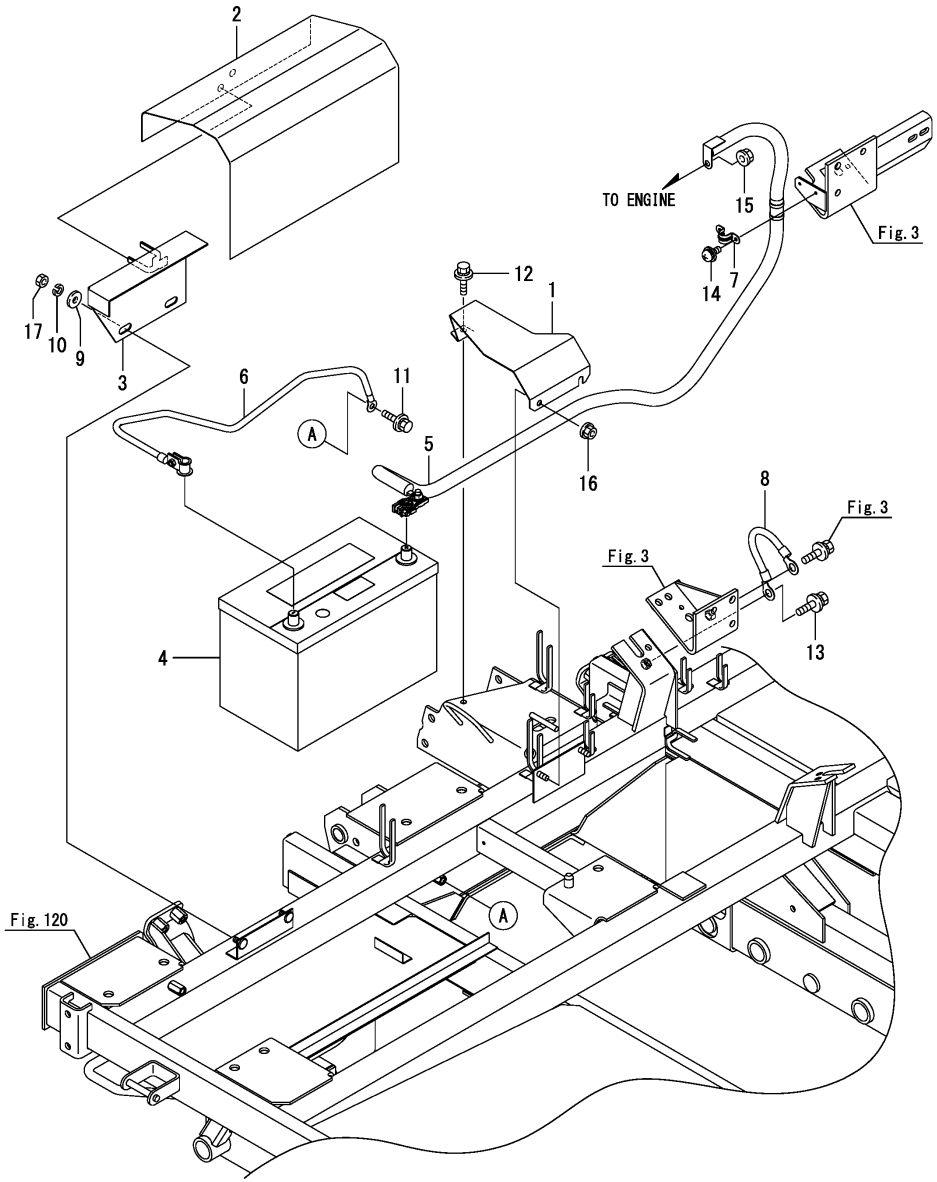

(A)=AW70GV,RSX(F)-IN (D)=
(B)= (E)=
(C)= (F)=

No.	Lev.	Parts No.	Description	Q'ty (A)	(B)	(C)	(D)	(E)	(F)	I	R
1	1	1E6C40-83151-1	COVER, HARNESS	1							
2	1	1E6B30-83170	COVER, BATTERY	1							
3	1	1E6B30-83180	PLATE, BATTERY FIX	1							
4	1	1E6B00-83200	BATTERY, 95D31L	1							
5	1	1E6C40-83200	CABLE, + BATTERY	1							
6	1	1E6C45-83220	CABLE, - BATTERY	1							
7	1	1E6681-83430	HOLDER, CABLE	1							
8	1	1E8809-83900	WIRE, EARTH 13X200	1							
9	1	22157-080000	WASHER, 8	2							
10	1	22217-080000	WASHER, SPRING 8	2							
11	1	26014-080202	BOLT, M8X 20	1							
12	1	26014-080202	BOLT, M8X 20	1							
13	1	26014-100202	BOLT, M10X 20	1							
14	1	26023-050122	SCREW, M5X12	2							
15	1	26367-080002	NUT, M8	1							
16	1	26367-080002	NUT, M8	2							
17	1	26717-080002	NUT, M8	2							

N:Old $\overset{\text{Yes}}{\underset{\text{No}}{\leftrightarrows}}$ New, Q:Old $\overset{\text{No}}{\underset{\text{Yes}}{\leftrightarrows}}$ New, R:Old $\overset{\text{Yes}}{\underset{\text{Yes}}{\leftrightarrows}}$ New, S:Old $\overset{\text{No}}{\underset{\text{No}}{\leftrightarrows}}$ New, W:Add, Z:Discontinued, F:Interchangeable by set, K:Q'ty Change

Copyright (C) 2018 YANMAR CO., LTD. All RightsReserved.

Fig.135. WIRE HARNESS

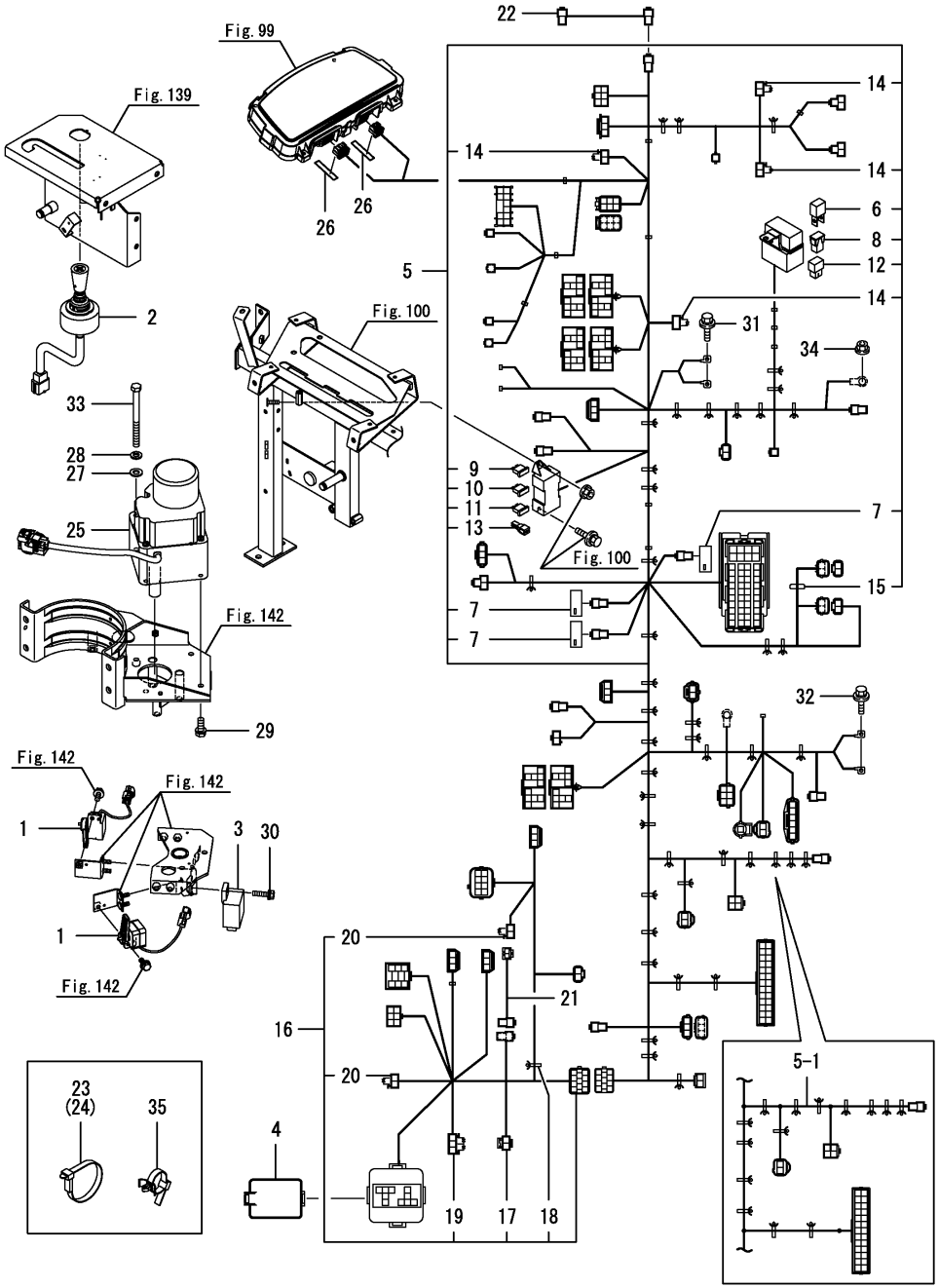

(A)=AW70GV,RSX(F)-IN (D)=
(B)= (E)=
(C)= (F)=

No.	Lev.	Parts No.	Description	Q'ty (A)	(B)	(C)	(D)	(E)	(F)	I	R
1	1	1E8915-81360	SWITCH, LEVER 52	2							
2	1	1E8775-81400	SWITCH, CROSS LEVER	1							
3	1	1E8665-82050	RELAY, BREAKER	1							
4	1	1E9355-82600	COVER, RELAY BOX 2P	1							
5	1	1E6C43-84000	HARNESS, MACHINE	1							
5-1	1	1E6C43-84001	HARNESS, MACHINE	1						S	
	(A=F800176)										
6	2	1C6900-06180	FUSE, SLOW BLOW 80A	1							
7	2	1A6382-51510	RESISTANCE, 2W R120	3							
8	2	1A6240-51630	FUSE, SLOW BLOW 60A	1							
9	2	1E8665-83150	FUSE, MINI 5A	4							
10	2	1E8665-83160	FUSE, MINI 10A	5							
11	2	1E8665-83170	FUSE, MINI 15A	4							
12	2	1E8540-83220	FUSE, SLOW BLOW 60A	1							
13	2	1E8970-84820	PULLER, FUSE	1							
14	2	1E8235-84910	DIODE, 090 31	4							
15	2	1E8720-97990	LABEL, EMERGENCY	1							
16	1	1E6C42-84202	HARNESS,AUGER	1							
17	2	1S6480-07050	FUSE, SLOW BLOW 30A	1							
18	2	194680-51670	BAND, CLIP	1							
19	2	1E8450-84900	DIODE, 1.5AX2	1							
20	2	1E8235-84910	DIODE, 090 31	2							
21	1	1E6B34-84700	HARNESS, AUGER LAMP	1							
22	1	1E6B30-84920	HARNESS,EXTENSION	1							
23	1	1E8559-84960	BAND, WIRE LOCK 250	1							
24	1	1E8559-84960	BAND, WIRE LOCK 250	16							
25	1	1E6B34-89200	MOTOR, AUGER	1							
26	1	1E8550-97880	LABEL, METER	2							
27	1	22137-080000	WASHER, 8	1							
28	1	22217-080000	WASHER, SPRING 8	1							
29	1	26013-080202	BOLT, M8X 20	3							
30	1	26014-060252	BOLT, M6X 25	1							
31	1	26014-080162	BOLT, M8X 16	1							
32	1	26014-080162	BOLT, M8X 16	1							
33	1	26116-080952	BOLT, M8X 95 PLATED	1							
34	1	26367-060002	NUT, M6	1							
35	1	194680-51670	BAND, CLIP	4							

N:Old $\frac{\text{Yes}}{\text{No}}$ New, Q:Old $\frac{\text{No}}{\text{Yes}}$ New, R:Old $\frac{\text{Yes}}{\text{Yes}}$ New, S:Old $\frac{\text{No}}{\text{No}}$ New, W:Add, Z:Discontinued, F:Interchangeable by set, K:Q'ty Change

Copyright (C) 2018 YANMAR CO., LTD. All RightsReserved.

Fig.136. CONTROLLER(SA-R)

(A)=AW70GV,RSX(F)-IN (D)=
(B)= (E)=
(C)= (F)=

No.	Lev.	Parts No.	Description	Q'ty (A)	(B)	(C)	(D)	(E)	(F)	I	R
1	1	1RF001-00114	CONTROLLER,SA-R,3G	1							
2	1	1E6B30-81880	COVER, CONTROLLER	1							
3	1	1E6C40-81950-1	STAY,CONTROLLER A	1							
4	1	26014-060202	BOLT, M6X 20	4							
5	1	26014-080202	BOLT, M8X 20	2							
6	1	26367-060002	NUT, M6	3							

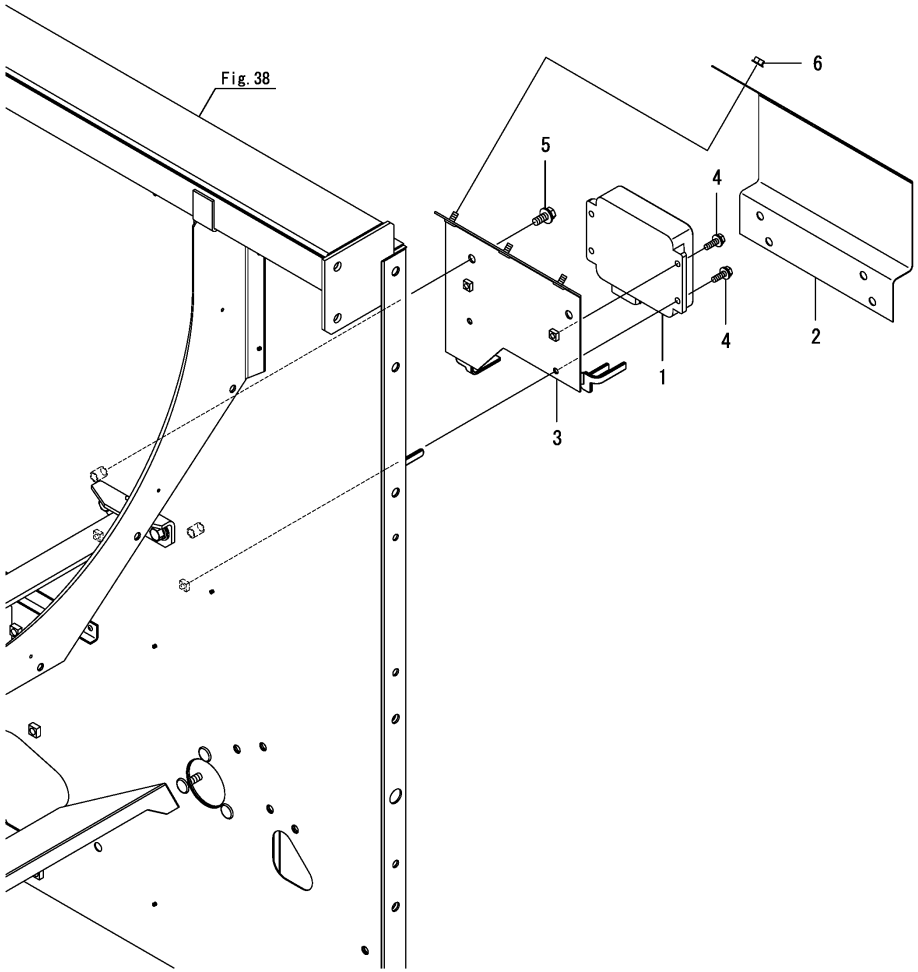

N:Old ◄Yes/No► New, Q:Old ◄No/Yes► New, R:Old ◄Yes/Yes► New, S:Old ◄No/No► New, W:Add, Z:Discontinued, F:Interchangeable by set, K:Q'ty Change

Copyright (C) 2018 YANMAR CO., LTD. All RightsReserved.

Fig.137. ANTENNA(SA-R)

(A)=AW70GV,RSX(F)-IN (D)=
(B)= (E)=
(C)= (F)=

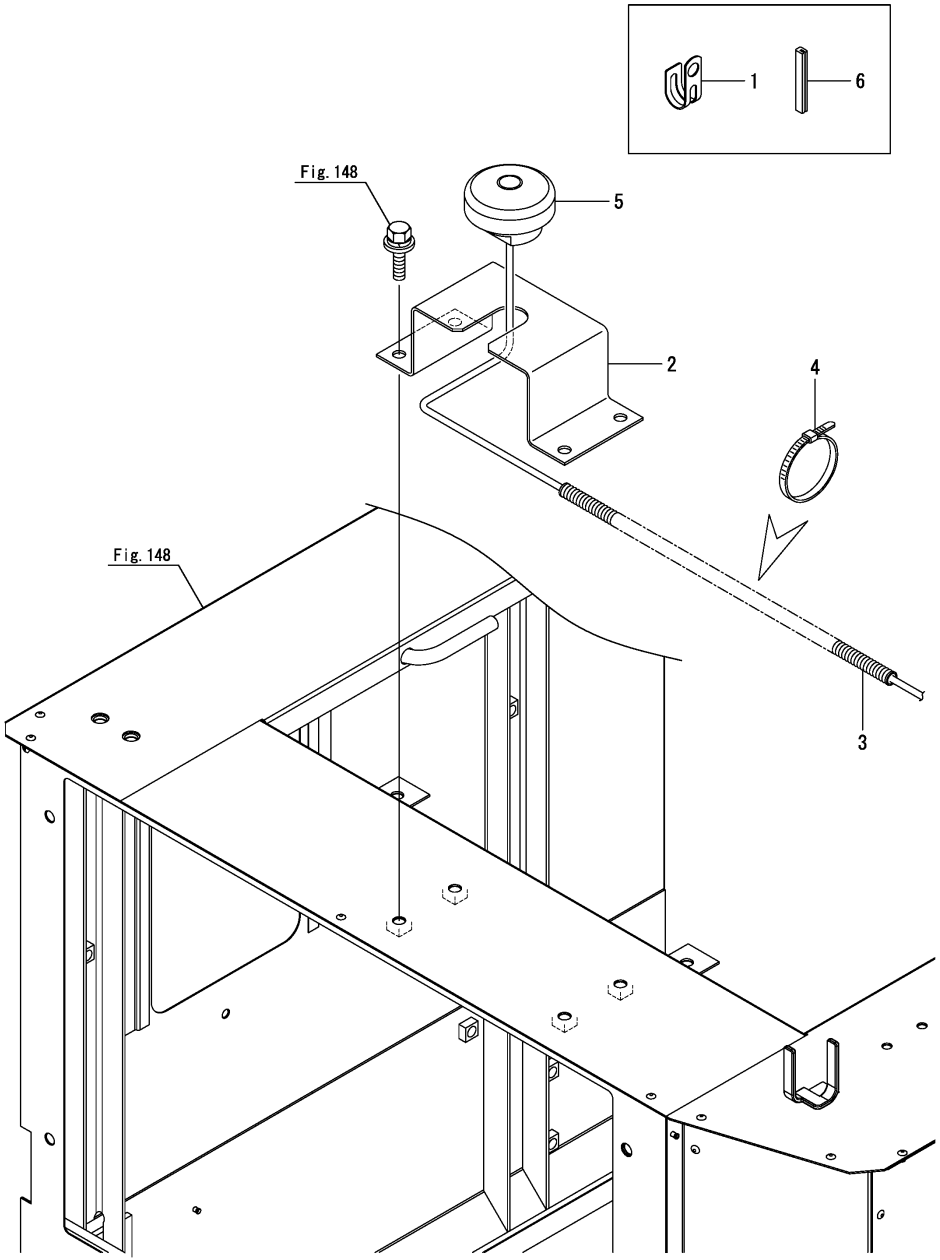

No.	Lev.	Parts No.	Description	Q'ty (A)	(B)	(C)	(D)	(E)	(F)	I	R
1	1	1A8296-51640	CLAMP, D	3							
2	1	1E6C41-81851	STAY,ANTENNA	1							
3	1	1E6B30-84950	TUBE, CORRUGATE 3000	1							
4	1	1E8559-84970	BAND, WIRE LOCK 140	8							
5	1	1RF001-93010	ANTENNA, MOBILE	1							
6	1	1E6B31-94180	RUBBER,EDGE GUARD 50	1							

N:Old $\xleftarrow[\text{No}]{\text{Yes}}$ New, Q:Old $\xleftarrow[\text{Yes}]{\text{No}}$ New, R:Old $\xleftarrow[\text{Yes}]{\text{Yes}}$ New, S:Old $\xleftarrow[\text{No}]{\text{No}}$ New, W:Add, Z:Discontinued, F:Interchangeable by set, K:Q'ty Change

Copyright (C) 2018 YANMAR CO., LTD. All RightsReserved.

Fig.138. AUGER INPUT

(A)=AW70GV,RSX(F)-IN (D)=
(B)= (E)=
(C)= (F)=

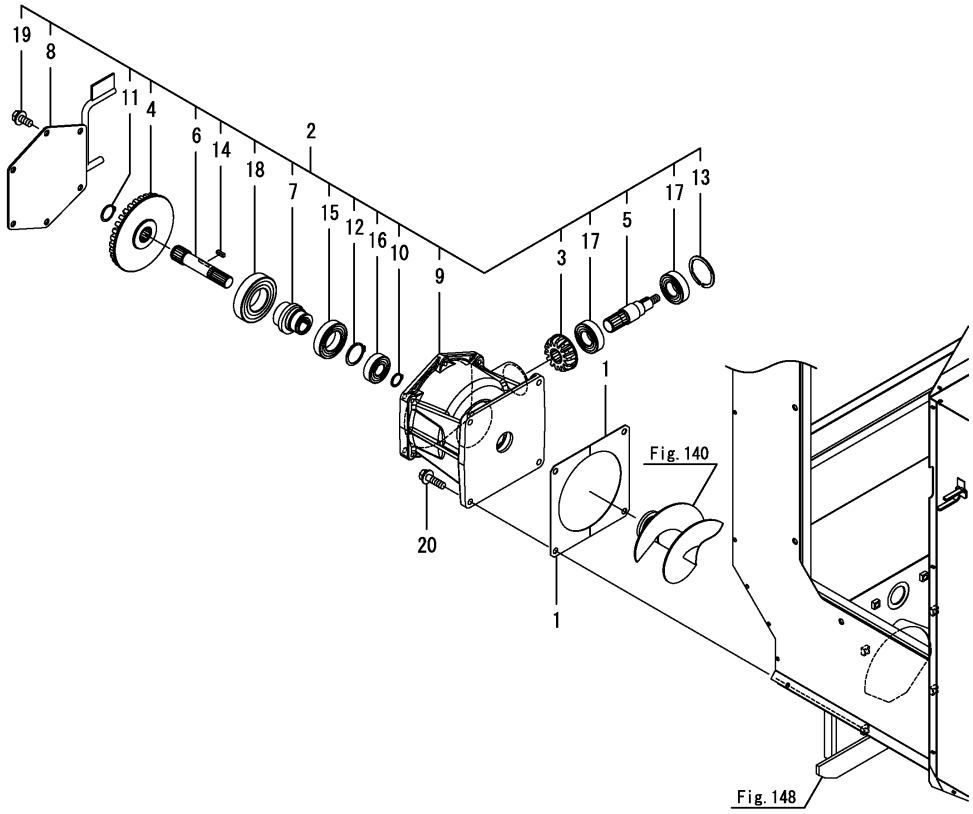

No.	Lev.	Parts No.	Description	Q'ty (A)	(B)	(C)	(D)	(E)	(F)	I	R
1	1	1E6C41-91190	SHIM, INPUT CASE	2							
2	1	7E6C41-91400	INPUT ASSY, AUGER	1							
3	2	1E6B31-91010	GEAR, BEVEL 14	1							
4	2	1E6C41-91020	GEAR,BEVEL 33	1							
5	2	1E6B31-91071	SHAFT, INPUT	1							
6	2	1E6C41-91080	SHAFT,LO. CONVEYOR A	1							
7	2	1E6C41-91090	CAM,LINK	1							
8	2	1E6C41-91150	COVER, CASE	1							
9	2	1E6C41-91180	CASE,GRAIN INPUT	1							
10	2	22242-000200	RING, 20	1							
11	2	22242-000250	RING, 25	1							
12	2	22242-000350	RING, 35	1							
13	2	22252-000521	RING, 52	1							
14	2	22551-050150	KEY, 5X 15	1							
15	2	24104-060074	BEARING, BALL 6007UU	1							
16	2	24104-062044	BEARING, BALL 6204UU	1							
17	2	24104-062054	BEARING, BALL 6205UU	2							
18	2	24104-062084	BEARING, BALL 6208UU	1							
19	2	26014-080202	BOLT, M8X 20	6							
20	1	26014-080302	BOLT, M8X 30	4							

N:Old $\xleftarrow[\text{No}]{\text{Yes}}$ New, Q:Old $\xleftarrow[\text{Yes}]{\text{No}}$ New, R:Old $\xleftarrow[\text{Yes}]{\text{Yes}}$ New, S:Old $\xleftarrow[\text{No}]{\text{No}}$ New, W:Add, Z:Discontinued, F:Interchangeable by set, K:Q'ty Change

Copyright (C) 2018 YANMAR CO., LTD. All RightsReserved.

Fig.139. AUGER CLUTCH

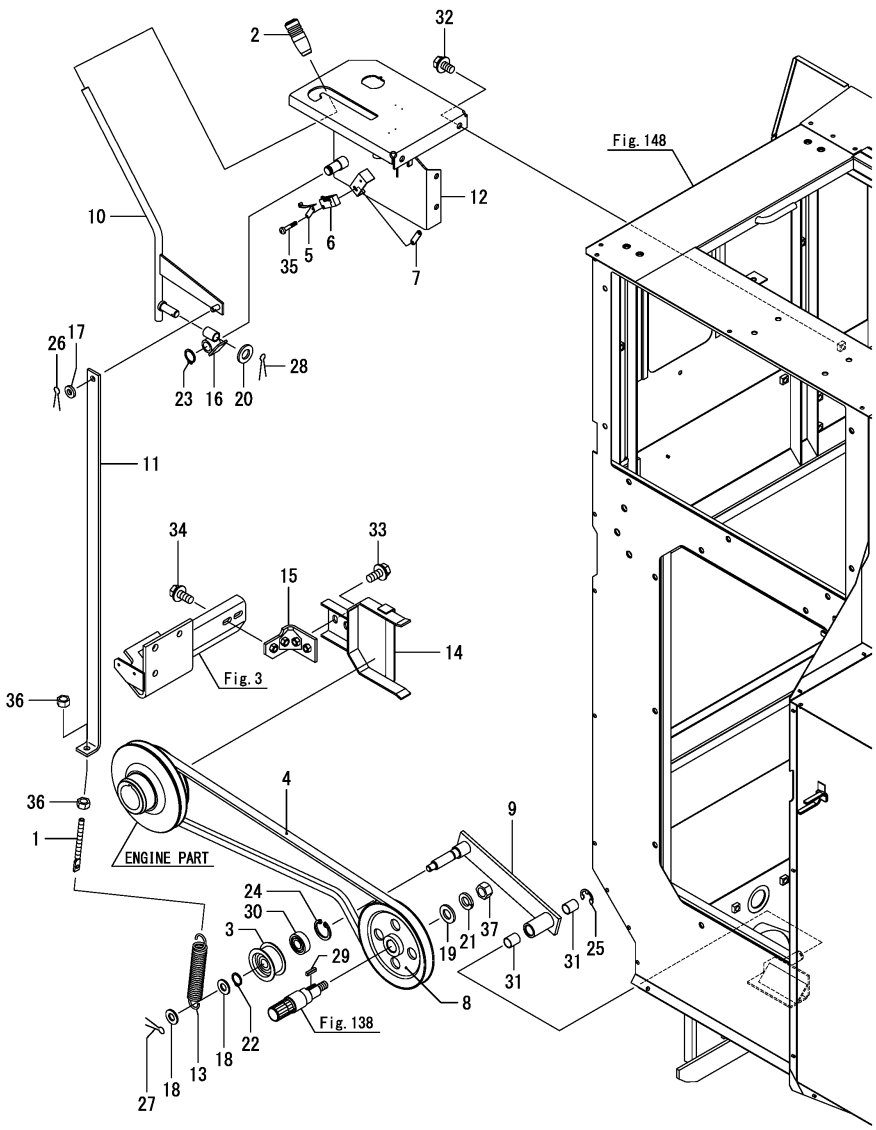

(A)=AW70GV,RSX(F)-IN (D)=
(B)= (E)=
(C)= (F)=

No.	Lev.	Parts No.	Description	Q'ty (A)	(B)	(C)	(D)	(E)	(F)	I	R
1	1	1E8559-23840	SCREW, TENSION 8X122	1							
2	1	1E8559-33760	GRIP, LEVER RED	1							
3	1	1E9060-36010	PULLEY,TENSION 65-B1	1							
4	1	1E8230-51600	V-BELT, LB60-AG6	1							
4-1	1	25123-006004	V BELT, SB 60 H4	1						N	1
	(A=F800248)										
5	1	1E8255-81180	LEVER, ROLLER NV	1							
6	1	1E8915-81450	SWITCH, MICRO	1							
7	1	1E8550-84220	NUT, SWITCH 2-M3	1							
8	1	1E6B31-91040	PULLEY ASSY, V 150	1							
9	1	1E6B31-91100	ARM, TENSION 192	1							
10	1	1E6B31-91201-1	LEVER,CLUTCH	1							
11	1	1E6B31-91252	PLATE, LINK	1							
12	1	1E6B34-91250-2	BASE,CLUTCH LEVER	1							
13	1	1E6B31-91270	SPRING, 26X138	1							
14	1	1E6B31-91401	RETAINER ASSY, BELT	1							
15	1	1E6C41-91470	BASE ASSY,RETAINER	1							
16	1	1E6B31-91501	FULCRUM, G CLUTCH	1							
17	1	22137-080000	WASHER, 8	1							
18	1	22137-100000	WASHER, 10	2							
19	1	22137-120000	WASHER, 12	1							
20	1	22137-120000	WASHER, 12	1							
21	1	22217-120000	WASHER, SPRING 12	1							
22	1	22242-000150	RING, 15	1							
23	1	22242-000150	RING, 15	1							
24	1	22252-000350	RING, 35	1							
25	1	22272-000120	RING, E-12	1							
26	1	22417-200160	PIN, COTTER 2.0X16	1							
27	1	22417-200160	PIN, COTTER 2.0X16	1							
28	1	22417-250250	PIN, COTTER 2.5X25	1							
29	1	22551-050200	KEY, 5X 20	1							
30	1	24104-062024	BEARING, BALL 6202UU	1							
31	1	24550-015200	BUSH, 15X20	2							
32	1	26014-080162	BOLT, M8X 16	4							
33	1	26014-080202	BOLT, M8X 20	2							
34	1	26014-080202	BOLT, M8X 20	2							
35	1	26587-030162	SCREW, M3X16	2							
36	1	26717-080002	NUT, M8	2							
37	1	26737-120002	NUT, M12	1							

Remarks
(1)No.4-1, Fig.155 No.7-1 interchangeable by set.

N:Old $\frac{\text{Yes}}{\text{No}}$ New, Q:Old $\frac{\text{No}}{\text{Yes}}$ New, R:Old $\frac{\text{Yes}}{\text{Yes}}$ New, S:Old $\frac{\text{No}}{\text{No}}$ New, W:Add, Z:Discontinued, F:Interchangeable by set, K:Q'ty Change

Copyright (C) 2018 YANMAR CO., LTD. All RightsReserved.

Fig.140. LOWER GRAIN AUGER

(A)=AW70GV,RSX(F)-IN (D)=
(B)= (E)=
(C)= (F)=

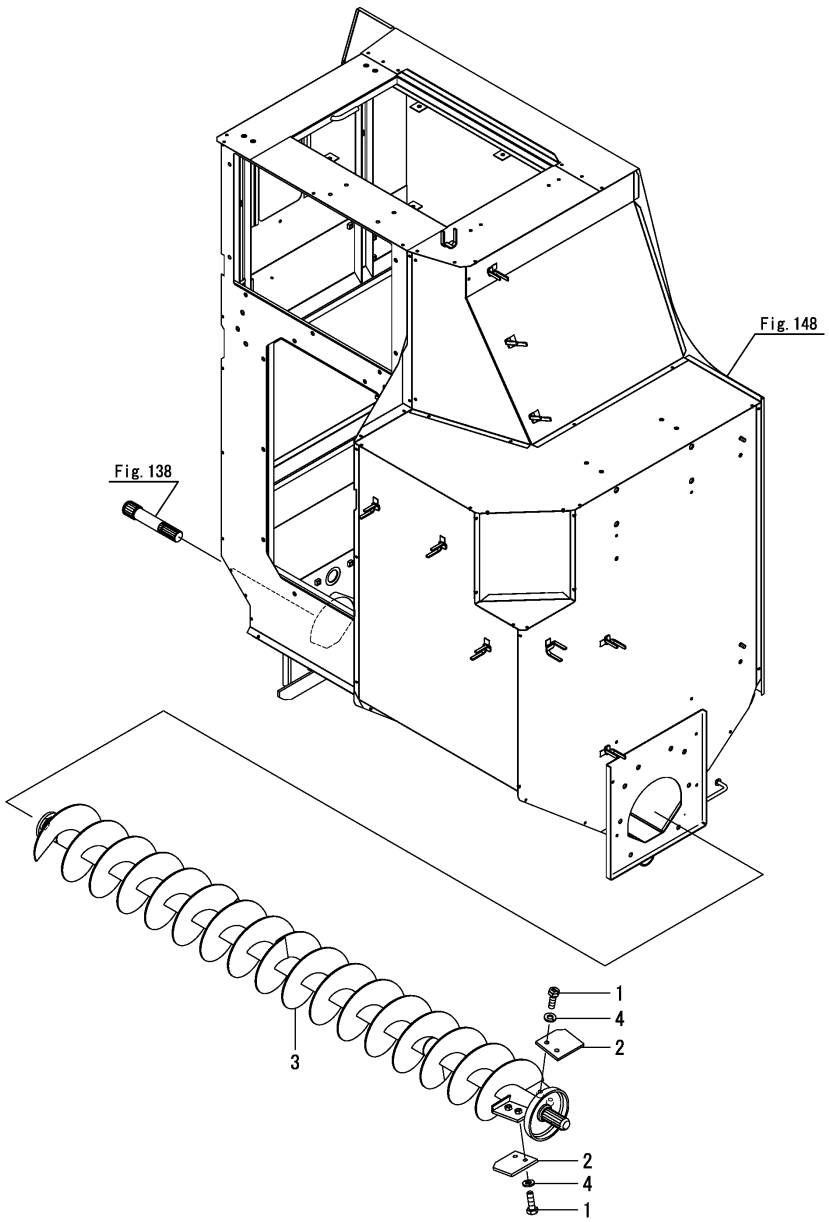

No.	Lev.	Parts No.	Description	Q'ty (A)	(B)	(C)	(D)	(E)	(F)	I	R
1	1	1E6B30-17290	BOLT, M6X20 11T	4							
2	1	1E6B34-92080	BLADE, CONVEYOR	2							
3	1	1E6C42-92500	CONVEYER, LOWER	1							
3-1	1 (A=F800157)	1E6C43-92500	CONVEYOR, LOWER	1						N	
4	1	22217-060000	WASHER, SPRING 6	4							

N:Old $\frac{\text{Yes}}{\text{No}}$ New, Q:Old $\frac{\text{No}}{\text{Yes}}$ New, R:Old $\frac{\text{Yes}}{\text{Yes}}$ New, S:Old $\frac{\text{No}}{\text{No}}$ New, W:Add, Z:Discontinued, F:Interchangeable by set, K:Q'ty Change

Copyright (C) 2018 YANMAR CO., LTD. All RightsReserved.

Fig.141. LOWER GRAIN AUGER SUCCESSION

(A)=AW70GV,RSX(F)-IN (D)=
(B)= (E)=
(C)= (F)=

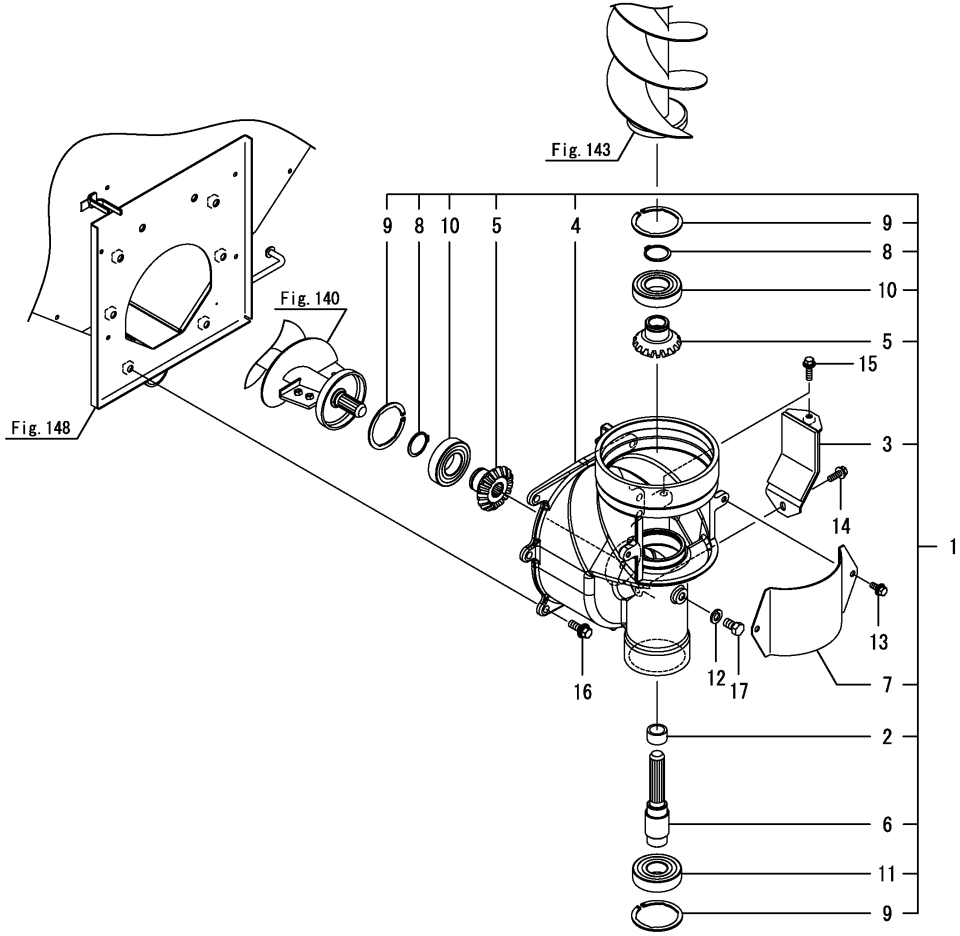

No.	Lev.	Parts No.	Description	Q'ty (A)	(B)	(C)	(D)	(E)	(F)	I	R
1	1	7E6B01-92300	SUCCESS ASY,LOWER	1							
2	2	1E8941-23290	COLLAR, 22X29X17	1							
3	2	1E6B01-91760-2	COVER, CLEANING B	1							
4	2	1E6B01-91770	CASE, SUCCESSION LOW	1							
5	2	1E6B01-91920	GEAR, BEVEL 17	2							
6	2	1E6B01-91930	SHAFT,VERT.DRIVE 2ND	1							
7	2	1E6B31-92020-2	COVER,CLEANING A	1							
8	2	22242-000350	RING, 35	2							
9	2	22252-000721	RING, 72	3							
10	2	24104-062074	BEARING, BALL 6207UU	2							
11	2	24104-063064	BEARING, BALL 6306UU	1							
12	1	22217-120000	WASHER, SPRING 12	1							
13	1	26014-080202	BOLT, M8X 20	2							
14	1	26014-080252	BOLT, M8X 25	1							
15	1	26014-080302	BOLT, M8X 30	1							
16	1	26014-100302	BOLT, M10X 30	6							
17	1	26116-120202	BOLT, M12X 20 PLATED	1							

N:Old $\frac{\text{Yes}}{\text{No}}$ New, Q:Old $\frac{\text{No}}{\text{Yes}}$ New, R:Old $\frac{\text{Yes}}{\text{Yes}}$ New, S:Old $\frac{\text{No}}{\text{No}}$ New, W:Add, Z:Discontinued, F:Interchangeable by set, K:Q'ty Change

Copyright (C) 2018 YANMAR CO., LTD. All RightsReserved.

Fig.142. VERTICAL AUGER FRAME

(A)=AW70GV,RSX(F)-IN (D)=
(B)= (E)=
(C)= (F)=

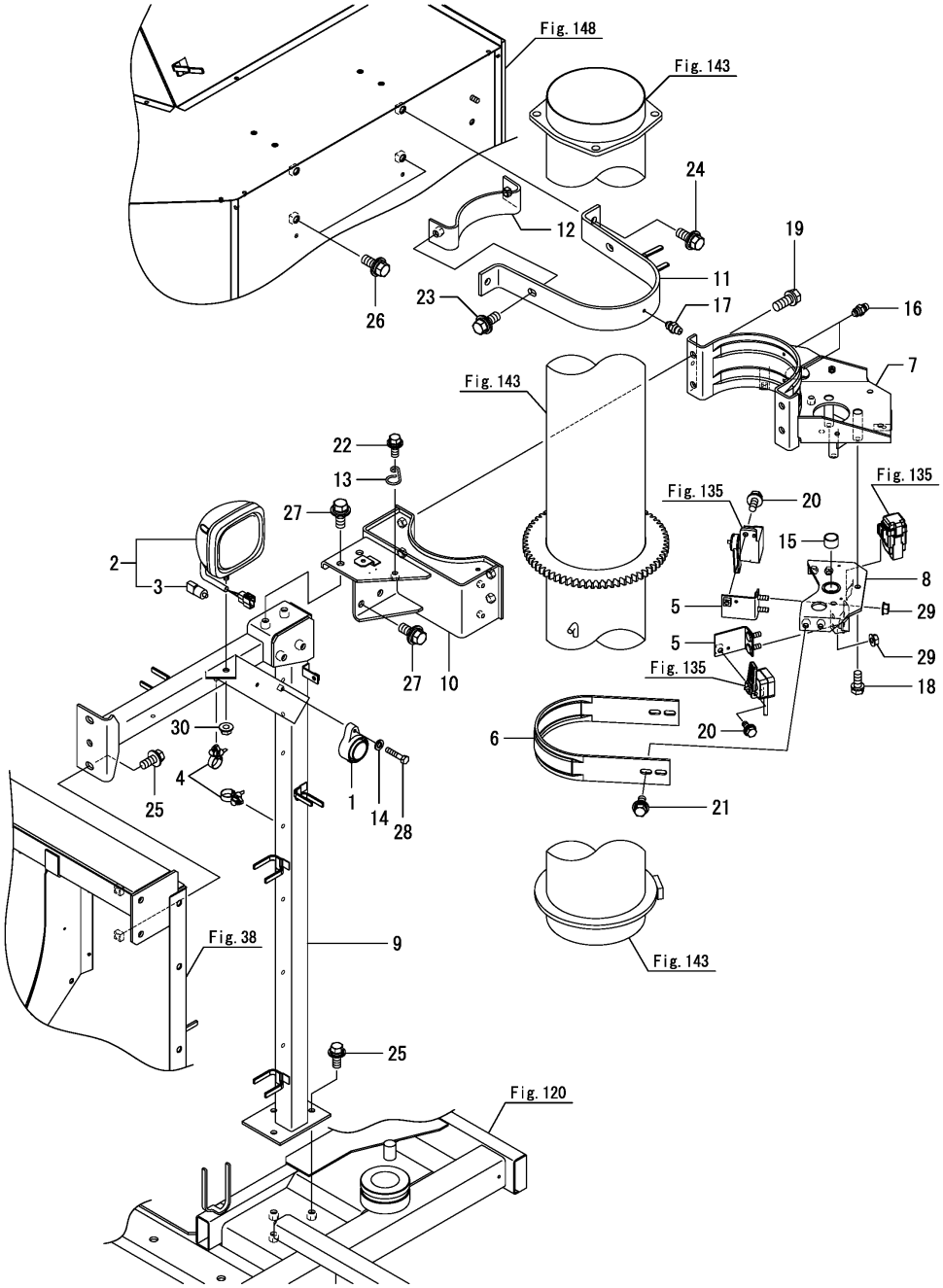

No.	Lev.	Parts No.	Description	Q'ty (A)	(B)	(C)	(D)	(E)	(F)	I	R
1	1	1E8923-81300	BUZZER, BACK	1							
2	1	1E6C40-81500	LAMP ASSY, WORK 35W	1							
3	2	1E6C40-81510	BULB,35W	1							
4	1	1E9265-84300	CLIP, BAND	8							
5	1	1E6B34-92180	STAY, SWITCH	2							
6	1	1E9110-92182	METAL, LB	1							
6-1	1	1E6C43-92180	METAL, LB	1						N	
	(A=F800157)										
7	1	1E6C81-92200	METAL, MOV R	1							
8	1	1E6C81-92251	METAL, L	1							
9	1	1E6C42-92301	HOLDER,GRAIN TANK	1							
10	1	1E6C81-92400	HOLDER, MOVE-ROUND	1							
11	1	1E6B01-94000	ARM, TANK FIXED	1							
11-1	1	1E6C43-94000	ARM	1						N	
	(A=F800049)										
12	1	1E6B01-94080	ARM, TANK FIXED B	1							
13	1	1E6750-94710	GUIDE, HOSE GA	1							
14	1	22217-050000	WASHER, SPRING 5	1							
15	1	24550-020150	BUSH, 20X15	1							
16	1	24761-060000	NIPPLE, GREASE MT6X1	2							
17	1	24761-060000	NIPPLE, GREASE MT6X1	1							
18	1	26013-080202	BOLT, M8X 20	3							
19	1	26013-100252	BOLT, M10X 25	4							
20	1	26014-060162	BOLT, M6X 16	2							
21	1	26014-080202	BOLT, M8X 20	4							
22	1	26014-080202	BOLT, M8X 20	1							
23	1	26014-100252	BOLT, M10X 25	2							
24	1	26014-100252	BOLT, M10X 25	2							
25	1	26014-100252	BOLT, M10X 25	5							
26	1	26014-100252	BOLT, M10X 25	2							
27	1	26014-100252	BOLT, M10X 25	4							
28	1	26117-050252	BOLT M 5X 25 PLATED	1							
29	1	26367-060002	NUT, M6	4							
30	1	26367-080002	NUT, M8	1							

N:Old $\frac{\text{Yes}}{\text{No}}$ New, Q:Old $\frac{\text{No}}{\text{Yes}}$ New, R:Old $\frac{\text{Yes}}{\text{Yes}}$ New, S:Old $\frac{\text{No}}{\text{No}}$ New, W:Add, Z:Discontinued, F:Interchangeable by set, K:Q'ty Change

Copyright (C) 2018 YANMAR CO., LTD. All RightsReserved.

Fig.143. VERTICAL AUGER

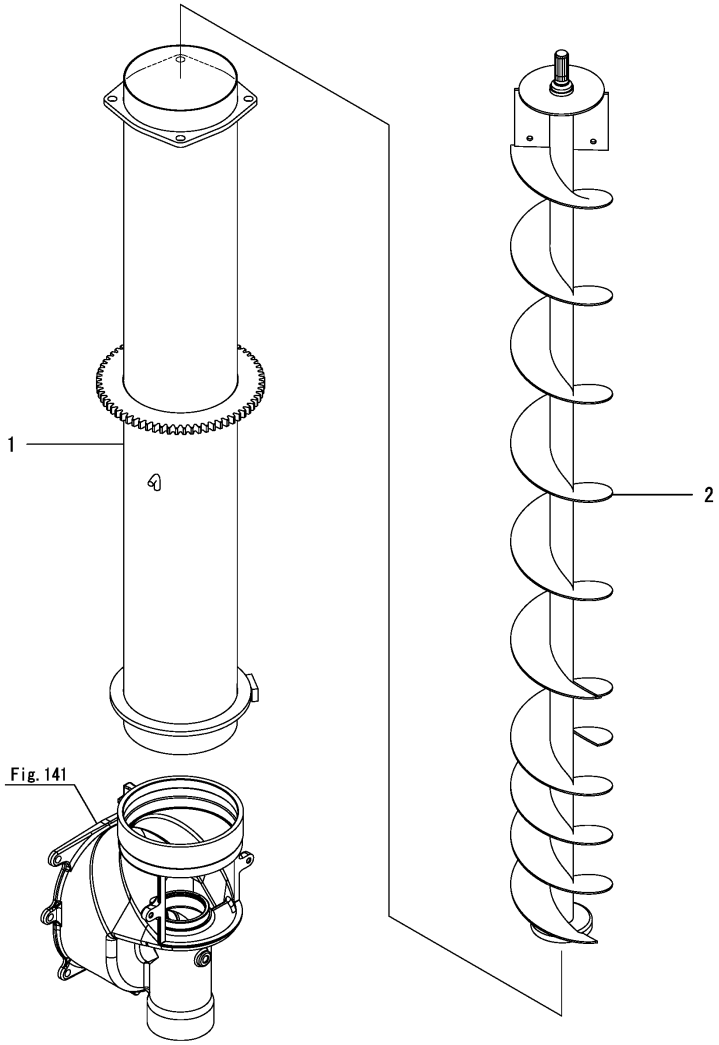

(A)=AW70GV,RSX(F)-IN (D)=
(B)= (E)=
(C)= (F)=

No.	Lev.	Parts No.	Description	Q'ty (A)	(B)	(C)	(D)	(E)	(F)	I	R
1	1	1E6C42-91621	PIPE, VERTICAL	1							
2	1	1E6B01-92430	CONVEYOR, VERTICAL	1							
2-1	1	1E6C43-92430	CONVEYOR, VERTICAL	1						N	
	(A=F800157)										

N:Old ◄Yes/No► New, Q:Old ◄No/Yes► New, R:Old ◄Yes/Yes► New, S:Old ◄No/No► New, W:Add, Z:Discontinued, F:Interchangeable by set, K:Q'ty Change

Copyright (C) 2018 YANMAR CO., LTD. All RightsReserved.

Fig.144. AUGER SUCCESS(1)

(A)=AW70GV,RSX(F)-IN (D)=
(B)= (E)=
(C)= (F)=

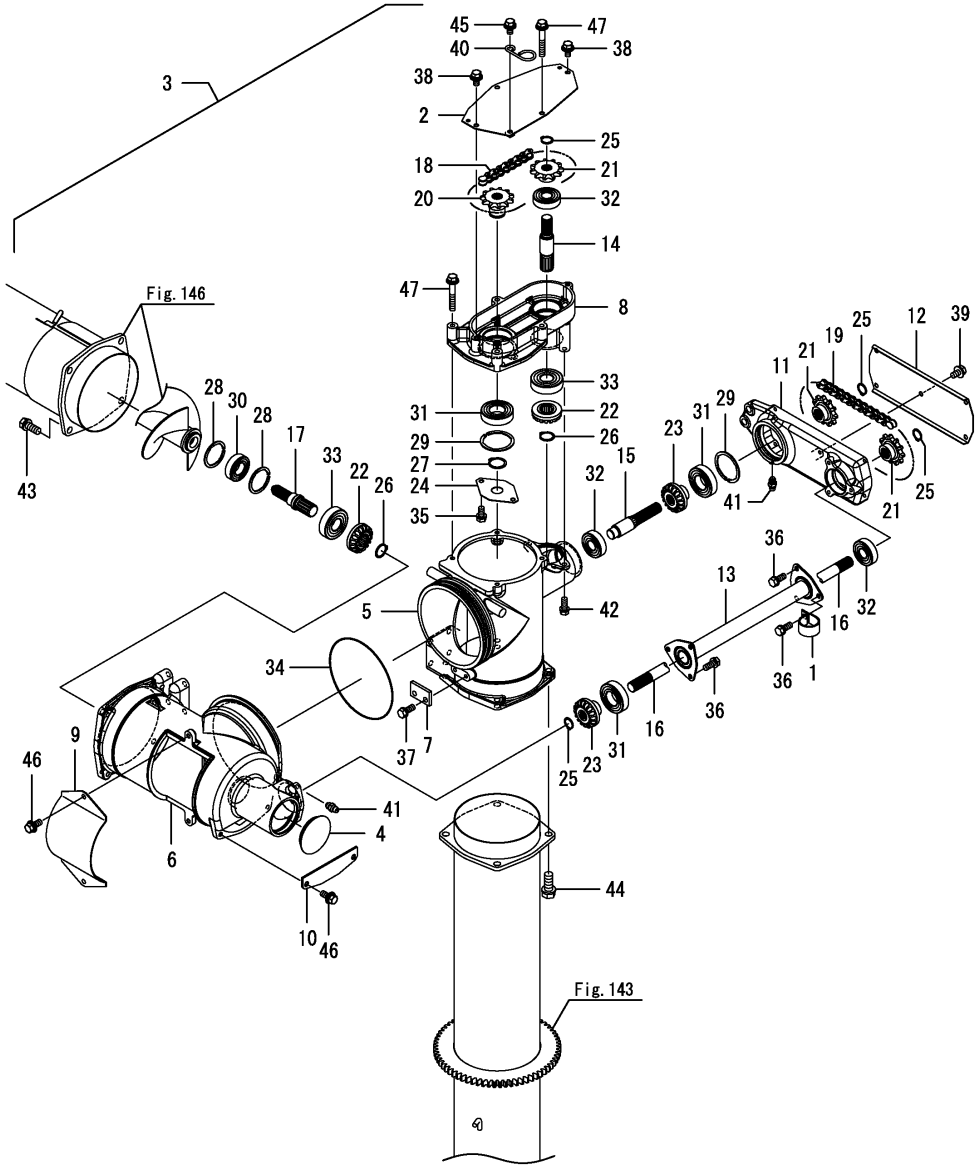

No.	Lev.	Parts No.	Description	Q'ty (A)	(B)	(C)	(D)	(E)	(F)	I	R
1	1	1E8559-83090	CLIP, COT-35	1							
2	1	1E8940-92032-3	COVER, CASE CHAIN	1							
3	1	7E6C42-92600	AUGER ASSY, LATERAL	1							
4	2	1E8680-91550	PLUG, BORE	1							
5	2	1E6C42-92000-3	CASE, CONNECTOR A	1							
6	2	1E6B01-92010-2	CASE, SUCCESSION B	1							
7	2	1E6750-92020-1	RETAINER, CASE A	1							
8	2	1E6B01-92020-2	CASE,CHAIN A	1							
9	2	1E6B31-92020-2	COVER,CLEANING A	1							
10	2	1E8940-92070-2	COVER, CASE	1							
10-1	2	1E8940-92071	LID,SUCCESSION CASE	1						N	
	(A=F800103)										
11	2	1E6B01-92110-2	CASE, CHAIN B	1							
12	2	1E8940-92111-1	COVER, CHAINCASE	1							
13	2	1E8940-92200-1	PIPE, 3RD SHAFT	1							
14	2	1E6B01-92250	SHAFT, SUCCESSION 1	1							
15	2	1E6B01-92260	SHAFT, SUCCESSION 2	1							
16	2	1E6B01-92270	SHAFT, SUCCESSION 3	1							
17	2	1E6B01-92280	SHAFT, SUCCESSION 4	1							
18	2	1E8940-92300	CHAIN, 50X28L	1							
19	2	1E8940-92310	CHAIN, 50X34L	1							
20	2	1E6B01-92330	SPROCKET, 11B	1							
21	2	1E6B01-92340	SPROCKET, 11A	3							
22	2	1E8540-92501	GEAR, BEVEL 17A	2							
23	2	1E8540-92511	GEAR, BEVEL 17B	2							
24	2	1E6681-92730	COVER,BEARING CASE C	1							
25	2	22242-000200	RING, 20	4							
26	2	22242-000250	RING, 25	2							
27	2	22242-000300	RING, 30	1							
28	2	22252-000521	RING, 52	2							
29	2	22252-000621	RING, 62	2							
30	2	24104-062054	BEARING, BALL 6205UU	1							
31	2	24104-062064	BEARING, BALL 6206UU	3							
32	2	24104-063044	BEARING, BALL 6304UU	3							
33	2	24104-063054	BEARING, BALL 6305UU	2							
34	2	24321-001700	O-RING, 1AG170.0	1							
35	2	26013-080162	BOLT, M8X 16	2							
36	2	26013-080202	BOLT, M8X 20	6							
37	2	26013-080202	BOLT, M8X 20	2							
38	2	26014-080162	BOLT, M8X 16	2							
39	2	26014-080162	BOLT, M8X 16	5							
40	1	1E6750-94710	GUIDE, HOSE GA	1							
41	1	24761-060000	NIPPLE, GREASE MT6X1	2							
42	1	26013-080252	BOLT, M8X 25	2							
43	1	26013-100252	BOLT, M10X 25	4							
44	1	26013-120302	BOLT, M12X 30	4							
45	1	26014-080162	BOLT, M8X 16	1							
46	1	26014-080202	BOLT, M8X 20	4							
47	1	26014-080552	BOLT, M8X 55	4							

N:Old $\frac{\text{Yes}}{\text{No}}$ New, Q:Old $\frac{\text{No}}{\text{Yes}}$ New, R:Old $\frac{\text{Yes}}{\text{Yes}}$ New, S:Old $\frac{\text{No}}{\text{No}}$ New, W:Add, Z:Discontinued, F:Interchangeable by set, K:Q'ty Change

Copyright (C) 2018 YANMAR CO., LTD. All RightsReserved.

Fig.145. AUGER SUCCESS(2)

(A)=AW70GV,RSX(F)-IN (D)=
(B)= (E)=
(C)= (F)=

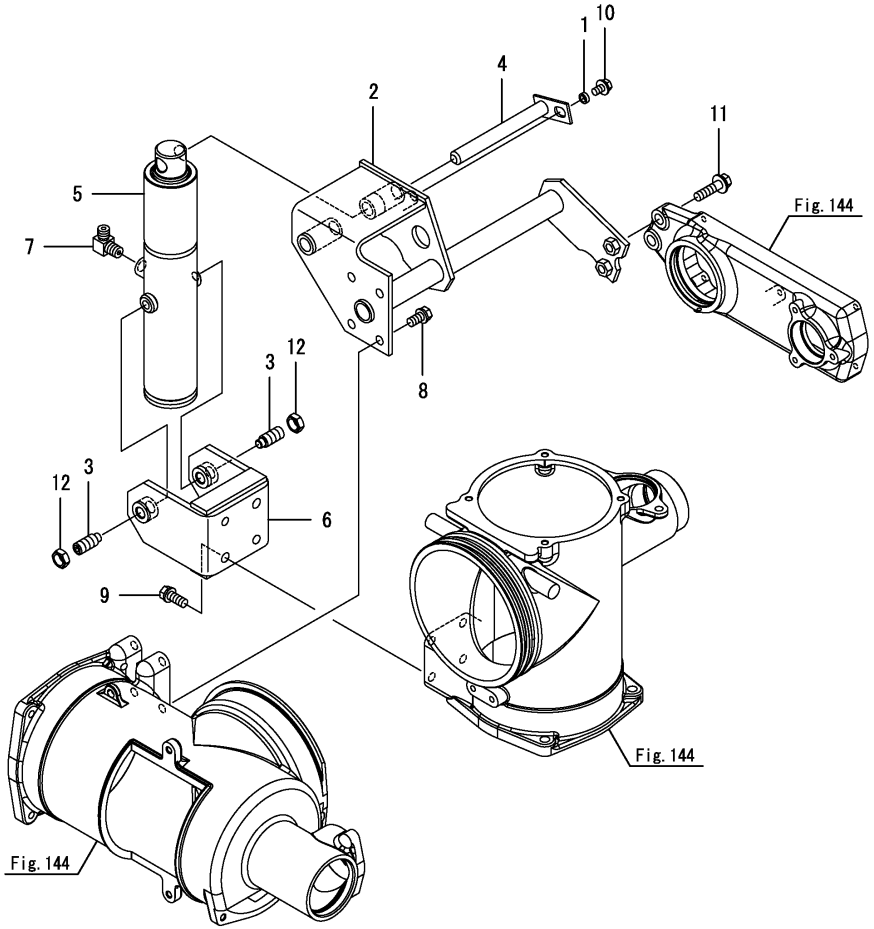

No.	Lev.	Parts No.	Description	Q'ty (A)	(B)	(C)	(D)	(E)	(F)	I	R
1	1	1E8235-73330	COLLAR, 8X12X4	1							
2	1	1E6B01-91950-2	ARM,BRACKET CYLINDER	1							
3	1	1E8080-92950	BOLT, CYLINDER	2							
4	1	1E8941-93480-1	PIN, CYLINDER	1							
5	1	1E6C42-94500-3	CYLINDER, AUGER	1							
6	1	1E6C42-94670-3	BRACKET, CYLINDER	1							
7	1	23393-020000	JOINT, 90RGI-1/4	1							
8	1	26013-100202	BOLT, M10X 20	4							
9	1	26013-100252	BOLT, M10X 25	4							
10	1	26014-080162	BOLT, M8X 16	1							
11	1	26014-100402	BOLT, M10X 40	2							
12	1	26757-140002	NUT, LOCK M14	2							

N:Old ◄Yes/No► New, Q:Old ◄No/Yes► New, R:Old ◄Yes/Yes► New, S:Old ◄No/No► New, W:Add, Z:Discontinued, F:Interchangeable by set, K:Q'ty Change

Copyright (C) 2018 YANMAR CO., LTD. All RightsReserved.

Fig.146. AUGER(LATERAL)

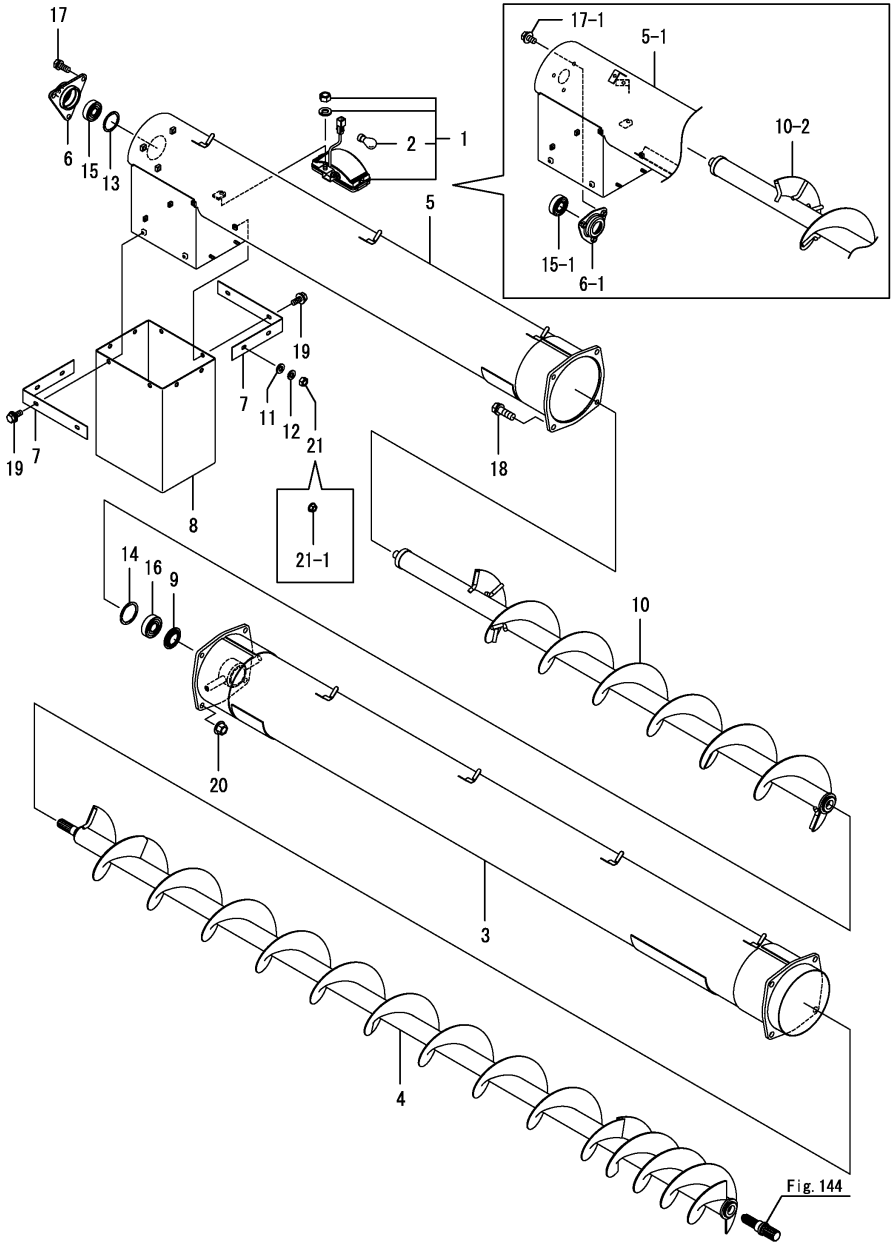

(A)=AW70GV,RSX(F)-IN (D)=
(B)= (E)=
(C)= (F)=

No.	Lev.	Parts No.	Description	Q'ty (A)	(B)	(C)	(D)	(E)	(F)	I	R
1	1	1E8923-81800	HEADLAMP, 20W	1							
2	2	1E8923-81810	BULB 20W	1							
3	1	1E6C42-91751	PIPE, DISCHARGE REAR	1							
4	1	1E6B01-91800	AUGER, DIS.ROOT	1							
5	1	1E6C42-91851-1	PIPE, DISCHARGE	1							
5-1	1	1E6C42-91852	PIPE, DISCHARGE	1						F	1
	(A=*2018.06)										
6	1	1E6B31-92660-1	METAL,DISCHARGE	1							
6-1	1	1E6D10-92550	HOLDER, BB47	1						F	1
	(A=*2018.06)										
7	1	1E6C41-92680-1	PLATE,SEAT	2							
8	1	1E6B31-92690	SEAT, PORT	1							
9	1	1E8940-92840	SEAL, METAL	1							
10	1	1E6C42-92900	AUGER, DISCHARGE	1							
10-1	1	1E6C42-92901	AUGER, DISCHARGE	1						N	
	(A=F800049)										
10-2	1	1E6C42-92902	AUGER, DISCHARGE	1						F	1
	(A=*2018.06)										
11	1	22137-060000	WASHER, 6	2						Z	
	(A=*2018.06)										
12	1	22217-060000	WASHER, SPRING 6	2						Z	
	(A=*2018.06)										
13	1	22252-000471	RING, 47	1						Z	1
	(A=*2018.06)										
14	1	22252-000521	RING, 52	1							
15	1	24104-063034	BEARING, BALL 6303UU	1							
15-1	1	24104-062044	BEARING, BALL 6204UU	1						F	1
	(A=*2018.06)										
16	1	24104-063044	BEARING, BALL 6304UU	1							
17	1	26013-080202	BOLT, M8X 20	3							
17-1	1	26014-080162	BOLT, M8X 16	3						F	1
	(A=*2018.06)										
18	1	26013-100302	BOLT, M10X 30	4							
19	1	26014-060162	BOLT, M6X 16	6							
20	1	26367-100002	NUT, M10	4							
21	1	26717-060002	NUT, M6	2							
21-1	1	26367-060002	NUT, M6	2						S	
	(A=F800049)										

Remarks
(1)No.5-1, 6-1, 10-2, 13, 15-1 & 17-1 interchangeable by set.

N:Old ◄Yes/No► New, Q:Old ◄No/Yes► New, R:Old ◄Yes/Yes► New, S:Old ◄No/No► New, W:Add, Z:Discontinued, F:Interchangeable by set, K:Q'ty Change

Copyright (C) 2018 YANMAR CO., LTD. All RightsReserved.

Fig.147. AUGER REST

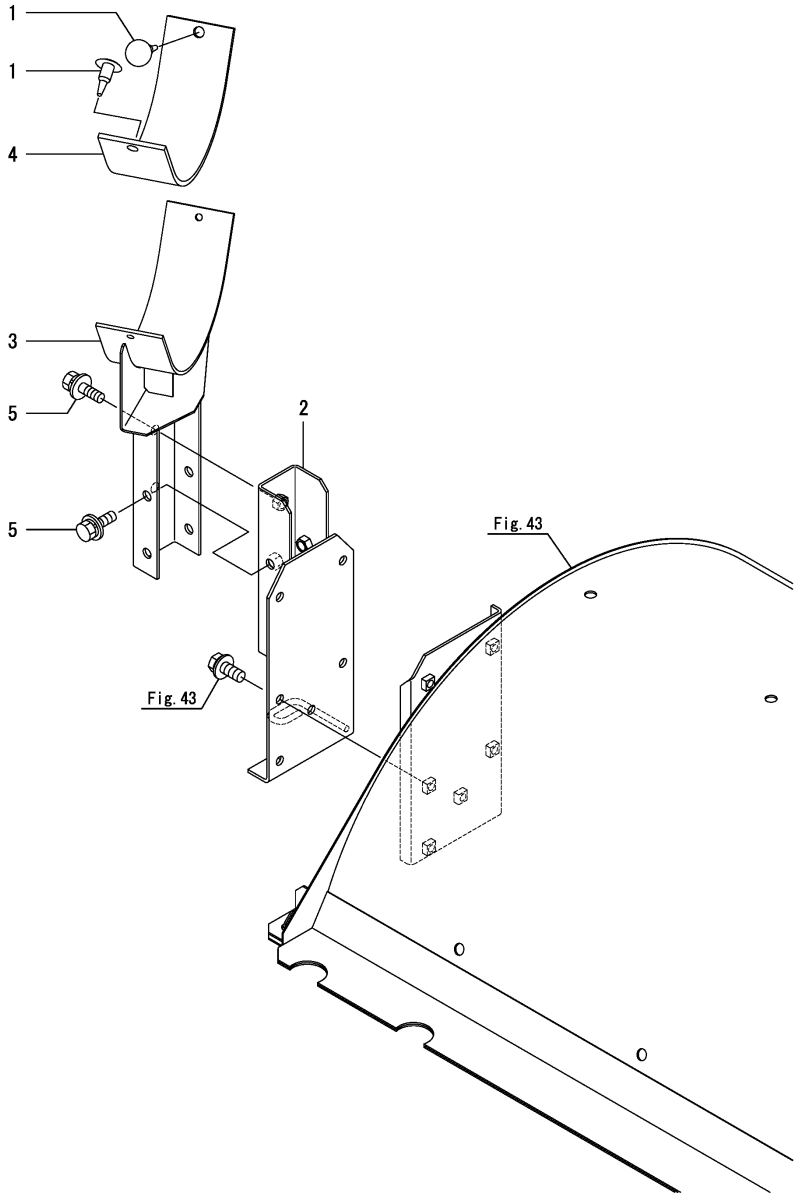

(A)=AW70GV,RSX(F)-IN (D)=
(B)= (E)=
(C)= (F)=

No.	Lev.	Parts No.	Description	Q'ty (A)	(B)	(C)	(D)	(E)	(F)	I	R
1	1	194697-62560	CLIP, HOLE CAP	2							
2	1	1E6C42-92752-1	REST, AUGER B	1							
3	1	1E6C42-92801-2	REST, AUGER A	1							
4	1	1E6B01-92880	RUBBER, AUGER REST	1							
5	1	26014-100252	BOLT, M10X 25	3							

N:Old $\xleftrightarrow[\text{No}]{\text{Yes}}$ New, Q:Old $\xleftrightarrow[\text{Yes}]{\text{No}}$ New, R:Old $\xleftrightarrow[\text{Yes}]{\text{Yes}}$ New, S:Old $\xleftrightarrow[\text{No}]{\text{No}}$ New, W:Add, Z:Discontinued, F:Interchangeable by set, K:Q'ty Change

Copyright (C) 2018 YANMAR CO., LTD. All RightsReserved.

Fig.148. GRAIN TANK

(A)=AW70GV,RSX(F)-IN (D)=
(B)= (E)=
(C)= (F)=

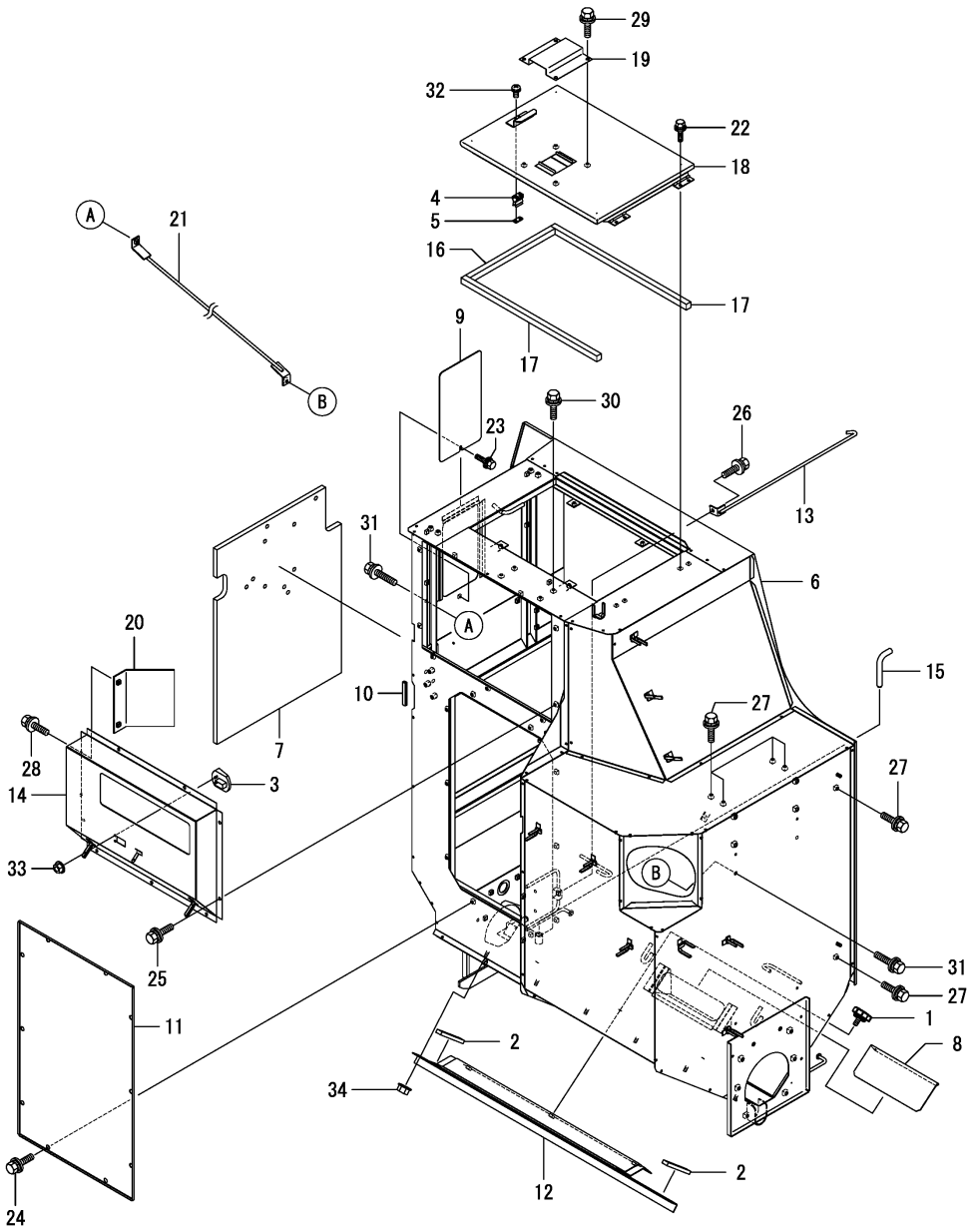

No.	Lev.	Parts No.	Description	Q'ty (A)	(B)	(C)	(D)	(E)	(F)	I	R
1	1	1E8559-48150	BOLT, KNOB 8X15	3							
1-1	1	26014-080202	BOLT, M8X 20	3							R
	(A=F800273)										
2	1	1E8800-68320	SEAL, 5X15X100	2							
3	1	1E8560-81740	SENSOR, GRAIN	1							
4	1	1E8559-91180	SPRING, LEG LOCK	1							
5	1	1E8559-91390-1	RETAINER, SPRING	1							
6	1	1E6C42-93004-1	TANK,GRAIN	1							
7	1	1E6C41-93210	SHEET, G TANK FRONT	1							
8	1	1E6C41-94150-2	SHUTTER	1							
9	1	1E6C43-94160	PLATE,PEEP	1							
10	1	1E6B31-94180	RUBBER,EDGE GUARD 50	1							
11	1	1E6C41-94210-2	COVER, CHECK	1							
12	1	1E6B31-94262-1	COVER,CLEANING	1							
13	1	1E6B31-94360	ROD, TANK	1							
14	1	1E6C41-94400-2	TANK,THROWER	1							
14-1	1	1E6C41-94401	TANK,THROWER	1							N
	(A=F800063)										
15	1	1E6B31-94450	PIN, LOCK	1							
16	1	1E6B31-94460	SEAL, 18X20X349	1							
17	1	1E6B31-94470	SEAL, 18X20X557	2							
18	1	1E6B31-94501-1	COVER,OPEN-CLOSE	1							
19	1	1E6B31-94580-1	GUARD,TANK DUCT B	1							
20	1	1E6B31-94830-1	GUARD, PADDY	1							
21	1	1E6B31-94900	ROD, TANK	1							
22	1	26014-060162	BOLT, M6X 16	4							
23	1	26014-060162	BOLT, M6X 16	1							
24	1	26014-080162	BOLT, M8X 16	10							
25	1	26014-080162	BOLT, M8X 16	9							
26	1	26014-080162	BOLT, M8X 16	1							
27	1	26014-080162	BOLT, M8X 16	6							
28	1	26014-080162	BOLT, M8X 16	2							
29	1	26014-080162	BOLT, M8X 16	4							
30	1	26014-080202	BOLT, M8X 20	4							
31	1	26014-080302	BOLT, M8X 30	2							
32	1	26022-060122	SCREW, M6X12	2							
33	1	26367-050002	NUT, M5	2							
34	1	26367-080002	NUT, M8	6							

N:Old $\frac{\text{Yes}}{\text{No}}$ New, Q:Old $\frac{\text{No}}{\text{Yes}}$ New, R:Old $\frac{\text{Yes}}{\text{Yes}}$ New, S:Old $\frac{\text{No}}{\text{No}}$ New, W:Add, Z:Discontinued, F:Interchangeable by set, K:Q'ty Change

Copyright (C) 2018 YANMAR CO., LTD. All RightsReserved.

Fig.149. TANK FIXING

(A)=AW70GV,RSX(F)-IN (D)=
(B)= (E)=
(C)= (F)=

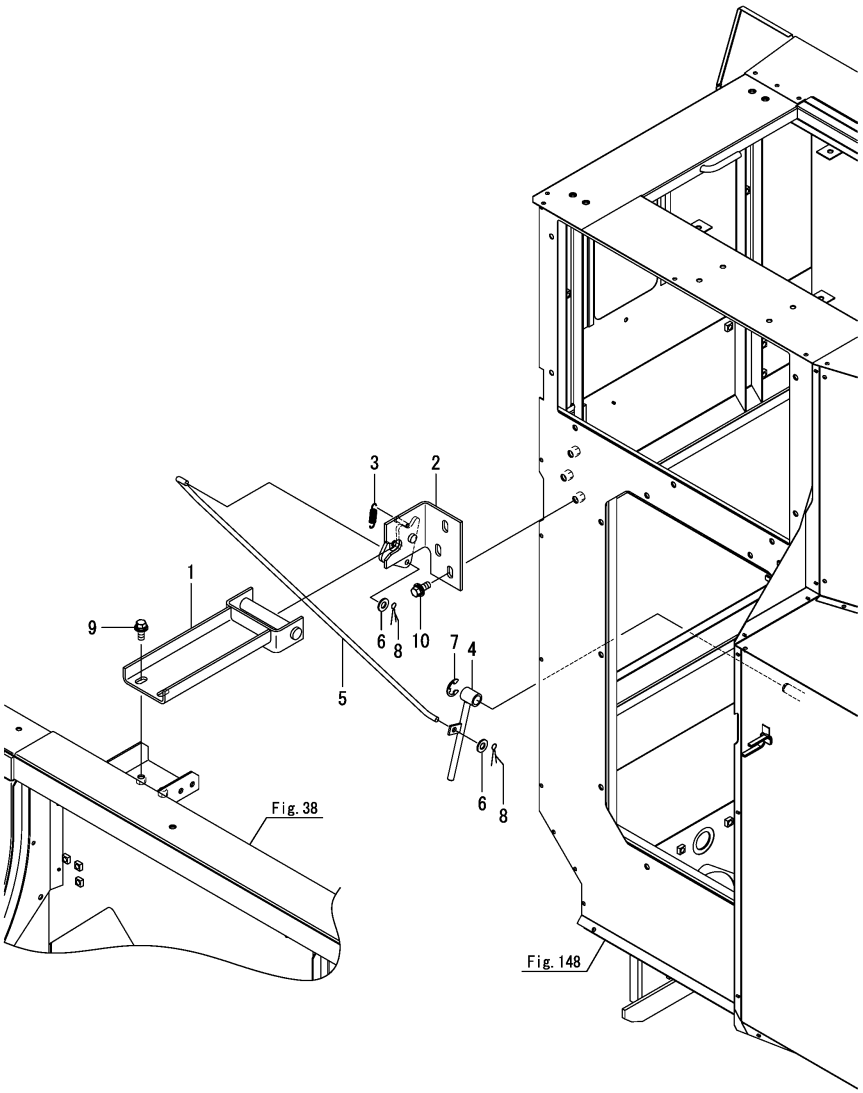

No.	Lev.	Parts No.	Description	Q'ty (A)	(B)	(C)	(D)	(E)	(F)	I	R
1	1	1E6B31-94600	GUIDE, LOCK	1							
1-1	1	1E6B31-94600-1	GUIDE, LOCK	1						S	1
	(A=*2018.08)										
2	1	1E6C41-94601	CATCH ASSY, LOCK	1							
3	1	1E6B31-94680	SPRING, LOCK	1							
4	1	1E6B31-94700	LEVER ASSY, LOCK	1							
5	1	1E6B31-94781	ROD, 968	1							
6	1	22137-080000	WASHER, 8	2							
7	1	22272-000120	RING, E-12	1							
8	1	22417-200200	PIN, COTTER 2.0X20	2							
9	1	26014-100252	BOLT, M10X 25	2							
10	1	26014-100252	BOLT, M10X 25	3							

Remarks
(1)Painting color=No.1 : YANMAR NAVY GRAY, No.1-1 : CATION E-COATING BLACK.

N:Old $\xleftarrow[\text{No}]{\text{Yes}}$ New, Q:Old $\xleftarrow[\text{Yes}]{\text{No}}$ New, R:Old $\xleftarrow[\text{Yes}]{\text{Yes}}$ New, S:Old $\xleftarrow[\text{No}]{\text{No}}$ New, W:Add, Z:Discontinued, F:Interchangeable by set, K:Q'ty Change

Copyright (C) 2018 YANMAR CO., LTD. All RightsReserved.

Fig.150. AUGER CONTROL(MOVE-ROUND)

(A)=AW70GV,RSX(F)-IN (D)=
(B)= (E)=
(C)= (F)=

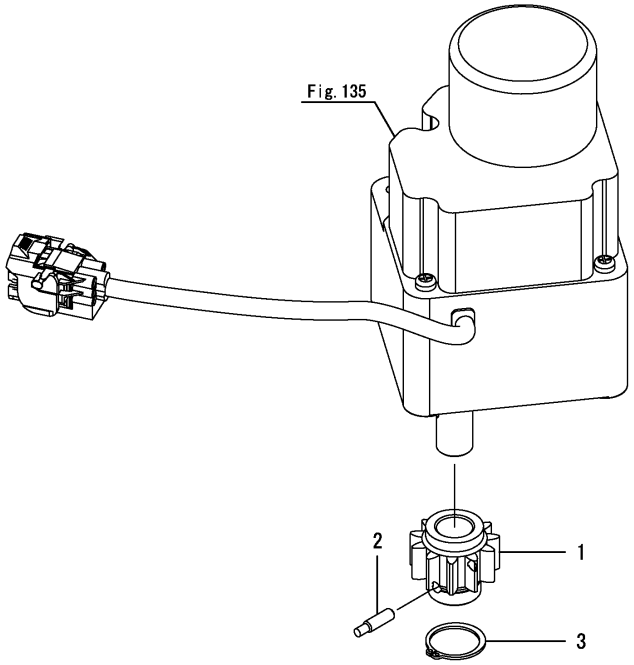

No.	Lev.	Parts No.	Description	Q'ty (A)	(B)	(C)	(D)	(E)	(F)	I	R
1	1	1E6C42-93440	GEAR,MOTOR 11T	1							
2	1	1E6B01-93480	PIN, SHEAR 6.5	1							
3	1	22242-000290	RING, 29	1							

N:Old $\xleftrightarrow[\text{No}]{\text{Yes}}$ New, Q:Old $\xleftrightarrow[\text{Yes}]{\text{No}}$ New, R:Old $\xleftrightarrow[\text{Yes}]{\text{Yes}}$ New, S:Old $\xleftrightarrow[\text{No}]{\text{No}}$ New, W:Add, Z:Discontinued, F:Interchangeable by set, K:Q'ty Change

Copyright (C) 2018 YANMAR CO., LTD. All RightsReserved.

Fig.151. TANK COVER

(A)=AW70GV,RSX(F)-IN (D)=
(B)= (E)=
(C)= (F)=

No.	Lev.	Parts No.	Description	Q'ty (A)	(B)	(C)	(D)	(E)	(F)	I	R
1	1	1E6C80-34900	HANDLE,LOCK RED	2							
2	1	1E6B31-94800-1	COVER,LOWER	1							

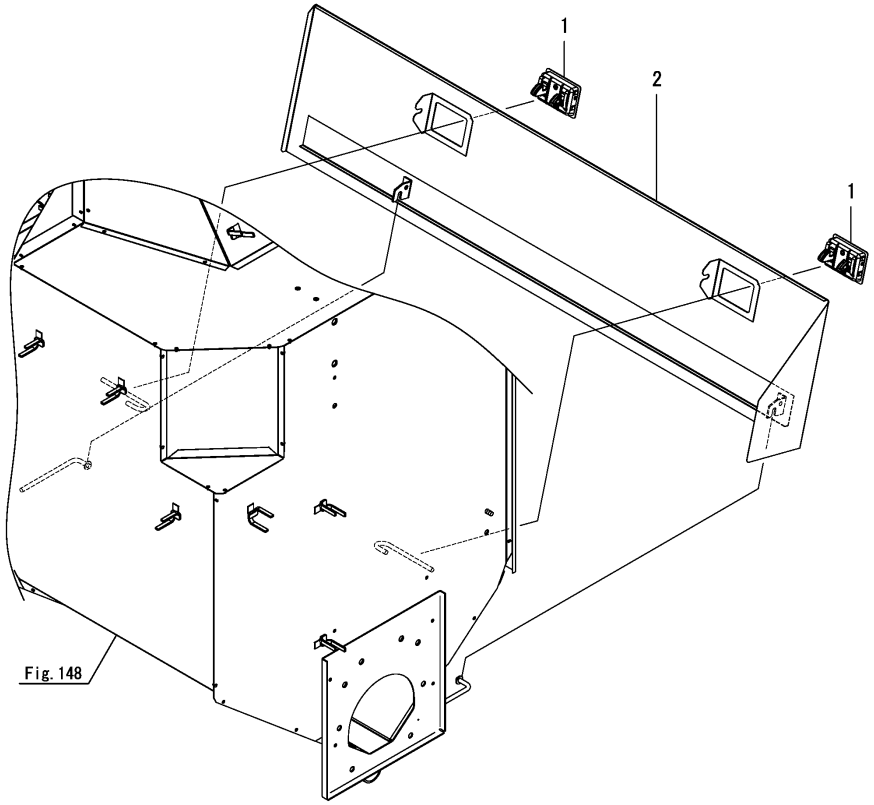

N:Old $\xleftarrow[\text{No}]{\text{Yes}}$ New, Q:Old $\xleftarrow[\text{Yes}]{\text{No}}$ New, R:Old $\xleftarrow[\text{Yes}]{\text{Yes}}$ New, S:Old $\xleftarrow[\text{No}]{\text{No}}$ New, W:Add, Z:Discontinued, F:Interchangeable by set, K:Q'ty Change

Copyright (C) 2018 YANMAR CO., LTD. All RightsReserved.

Fig.152. VIBRATION PLATE

(A)=AW70GV,RSX(F)-IN (D)=
(B)= (E)=
(C)= (F)=

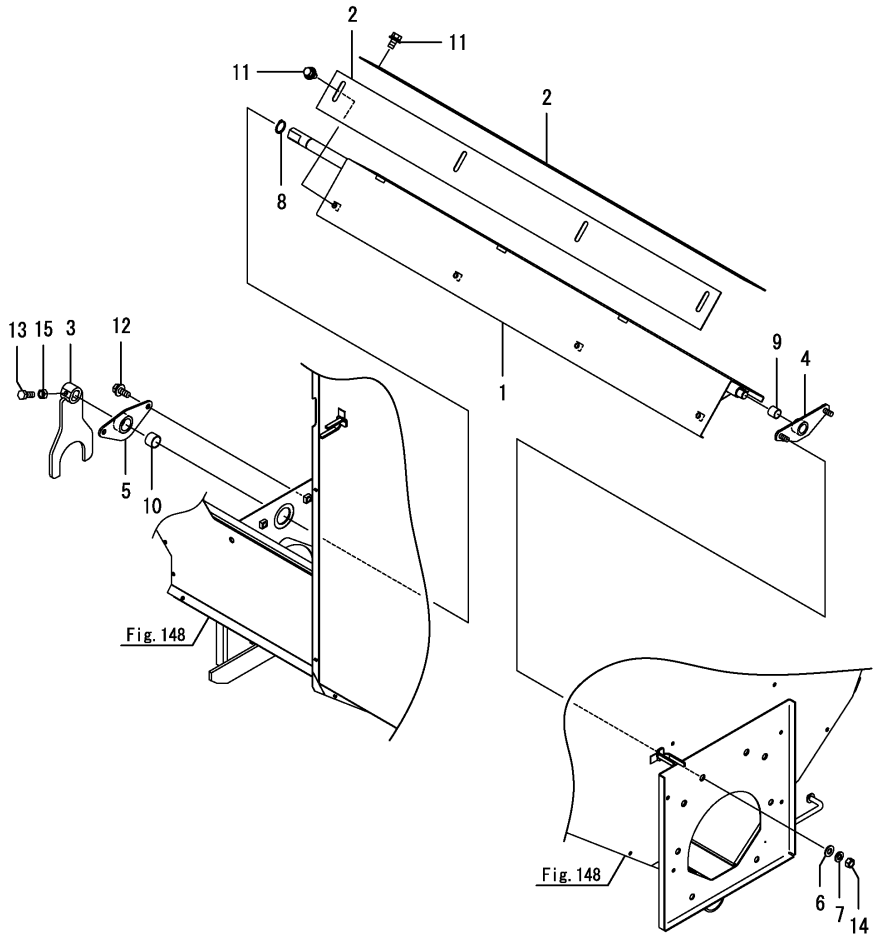

No.	Lev.	Parts No.	Description	Q'ty (A)	(B)	(C)	(D)	(E)	(F)	I	R
1	1	1E6C41-95300	COVER, CONVEYER A	1							
2	1	1E6B31-95340-1	COVER, CONVEYER B	2							
3	1	1E6C41-95350	ARM,LINK VIBRATION	1							
4	1	1E6C41-95430	BRACKET,FULCRUM A	1							
5	1	1E6C41-95460	BRACKET,FULCRUM B	1							
6	1	22137-080000	WASHER, 8	2							
7	1	22217-080000	WASHER, SPRING 8	2							
8	1	22242-000200	RING, 20	1							
9	1	24550-015150	BUSH, 15X15	1							
10	1	24550-020150	BUSH, 20X15	1							
11	1	26014-080162	BOLT, M8X 16	8							
12	1	26014-080202	BOLT, M8X 20	2							
13	1	26116-080202	BOLT, M8X 20 PLATED	1							
14	1	26717-080002	NUT, M8	2							
15	1	26717-080002	NUT, M8	1							

N:Old $\frac{\text{Yes}}{\text{No}}$ New, Q:Old $\frac{\text{No}}{\text{Yes}}$ New, R:Old $\frac{\text{Yes}}{\text{Yes}}$ New, S:Old $\frac{\text{No}}{\text{No}}$ New, W:Add, Z:Discontinued, F:Interchangeable by set, K:Q'ty Change

Copyright (C) 2018 YANMAR CO., LTD. All RightsReserved.

Fig.153. COVER(MOTOR)

(A)=AW70GV,RSX(F)-IN (D)=
(B)= (E)=
(C)= (F)=

No.	Lev.	Parts No.	Description	Q'ty (A)	(B)	(C)	(D)	(E)	(F)	I	R
1	1	1E6C42-95801	COVER,MOTOR	1							
2	1	1E6C42-95832	COVER,GEAR	1							
3	1	26014-060162	BOLT, M6X 16	4							
4	1	26014-060162	BOLT, M6X 16	3							

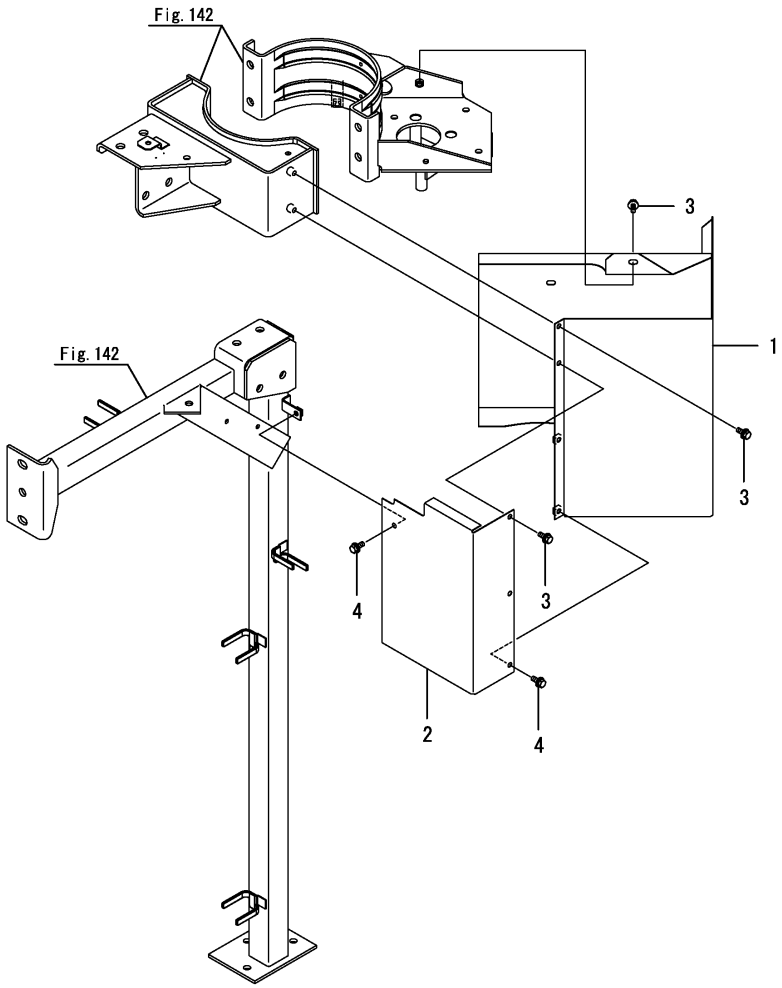

N:Old ⇄(Yes/No) New, Q:Old ⇄(No/Yes) New, R:Old ⇄(Yes/Yes) New, S:Old ⇄(No/No) New, W:Add, Z:Discontinued, F:Interchangeable by set, K:Q'ty Change

Copyright (C) 2018 YANMAR CO., LTD. All RightsReserved.

Fig.154. LABEL(1)

(A)=AW70GV,RSX(F)-IN (D)=
(B)= (E)=
(C)= (F)=

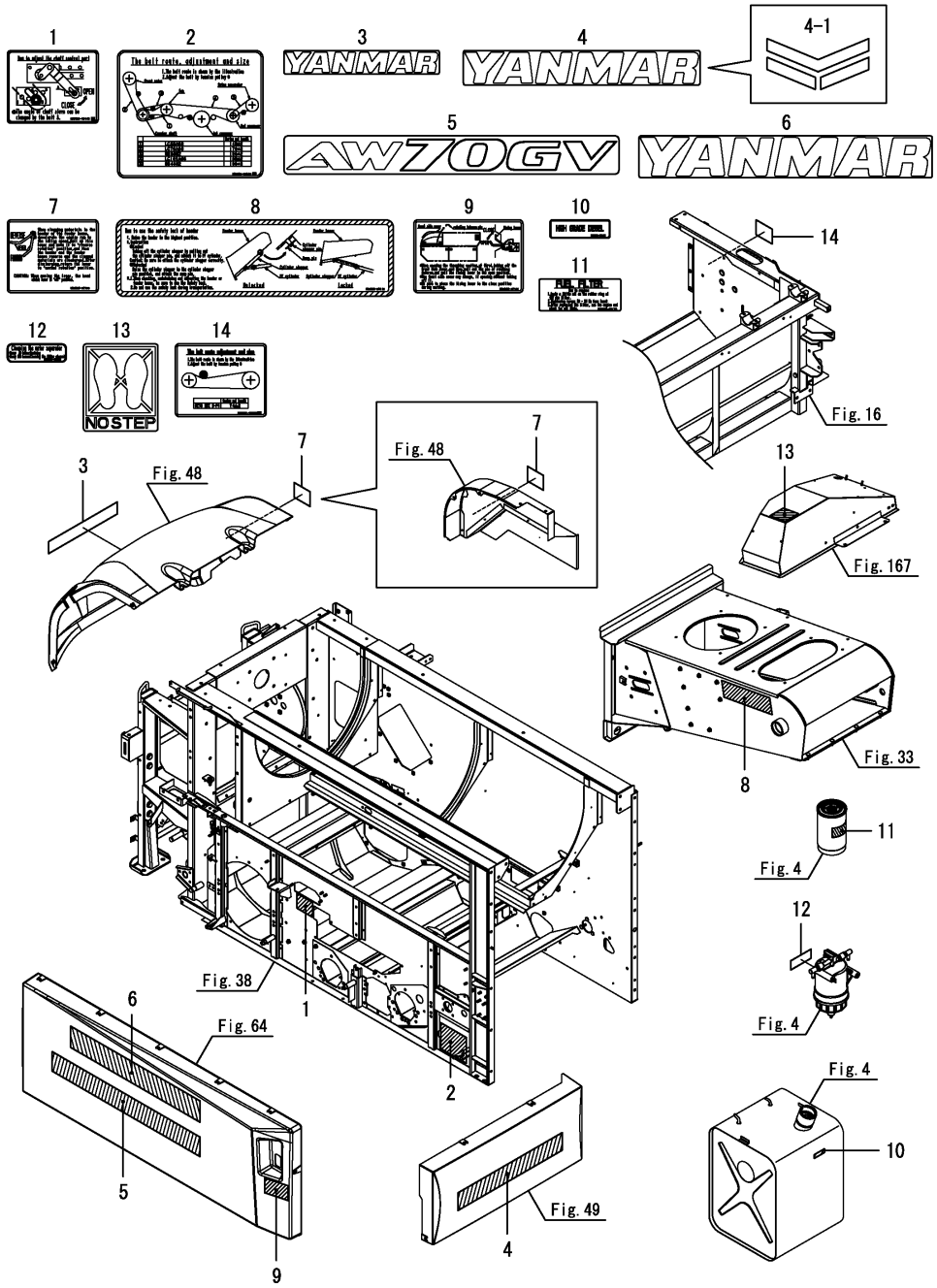

No.	Lev.	Parts No.	Description	Q'ty (A)	(B)	(C)	(D)	(E)	(F)	I	R
1	1	1E6C80-96140	LABEL, CHAFF AD. EN	1							
2	1	1E6C80-96240	LABEL, BELT SETTING	1							
3	1	1E6C43-97010	MARK, YANMAR RED 400	1							
4	1	1E6C43-97020	MARK, YANMAR RED 630	1							
4-1	1	20230-200100	STICKER FY,L R PVC	1						S	
	(A=F800157)										
4-2	1	20240-200100	STICKER FY,XL R PVC	1						N	
	(A=*2018.01)										
5	1	1E6C49-97050	MARK, AW70GV	1							
6	1	1E6C43-97090	MARK, YANMAR RED 800	1							
7	1	1E6B35-97100	LABEL, REVERSAL EN	1							
8	1	1E6B35-97110	LABEL, REAPING LOCK	1							
9	1	1E6B35-97141	LABEL, SIDE OPEN EN	1							
10	1	1E6B35-97160	LABEL, FUEL EN	1							
11	1	1E6B35-97170	LABEL, FILTER FO EN	1							
12	1	1E6C47-97190	LABEL, SEPARATOR	1							
13	1	1E6C80-97890	MARK, NO STEP	1						W	
	(A=F800033)										
14	1	1E6C80-97910	LABEL,EDGE BELT EN	1						W	
	(A=F800083)										

N:Old $\frac{\text{Yes}}{\text{No}}$ New, Q:Old $\frac{\text{No}}{\text{Yes}}$ New, R:Old $\frac{\text{Yes}}{\text{Yes}}$ New, S:Old $\frac{\text{No}}{\text{No}}$ New, W:Add, Z:Discontinued, F:Interchangeable by set, K:Q'ty Change

Copyright (C) 2018 YANMAR CO., LTD. All RightsReserved.

Fig.155. LABEL(2)

(A)=AW70GV,RSX(F)-IN (D)=
(B)= (E)=
(C)= (F)=

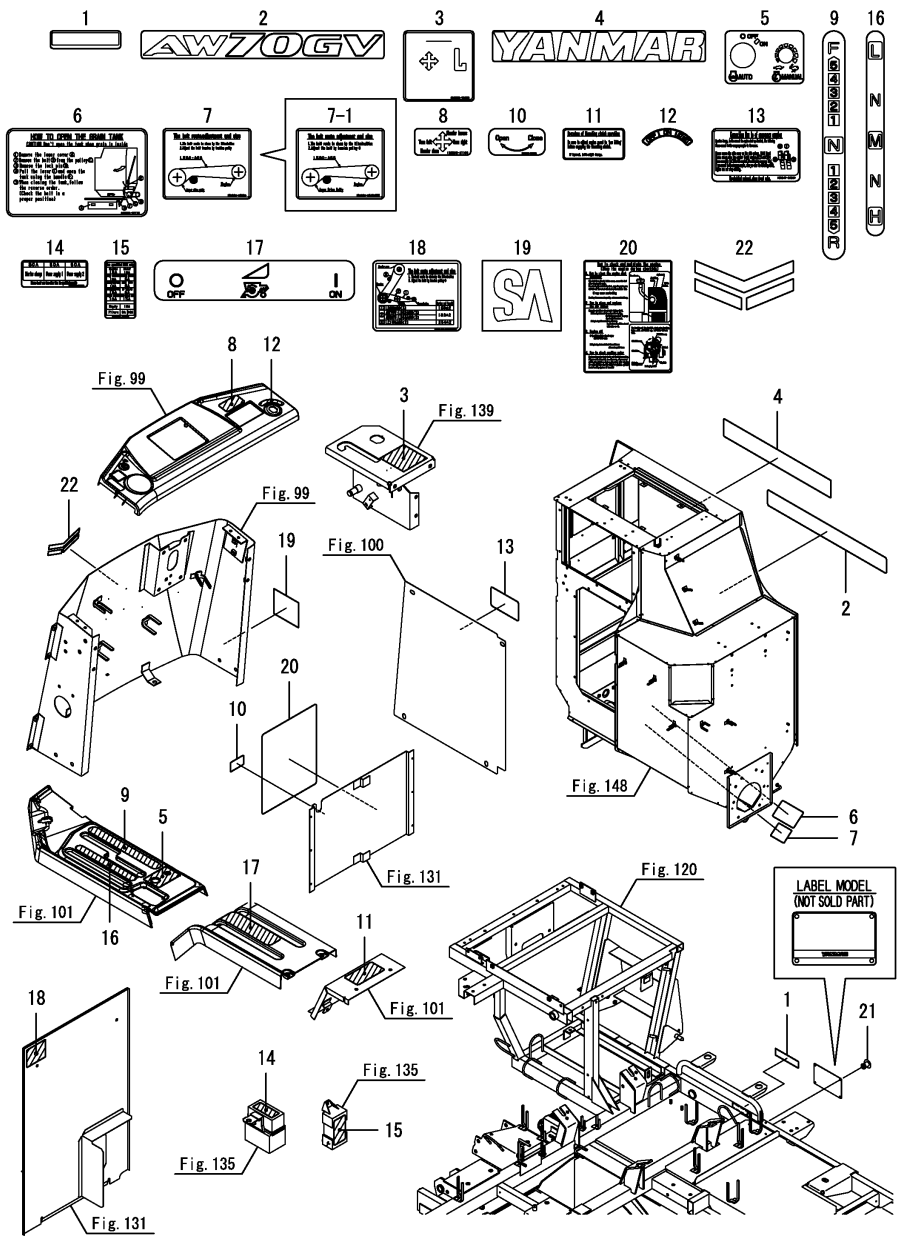

No.	Lev.	Parts No.	Description	Q'ty (A)	(B)	(C)	(D)	(E)	(F)	I	R
1	1	1C731C-95990	LABEL, PROHIBIT EX.I	1							
2	1	1E6C49-97050	MARK, AW70GV	1							
3	1	1E6B32-97080	LABEL,CLUT AUGER EN	1							
4	1	1E6C43-97090	MARK, YANMAR RED 800	1							
5	1	1E6C47-97140	LABEL,ACCELERATOR EN	1							
6	1	1E6B36-97170	LABEL, TANK OPEN EN	1							
7	1	1E6B36-97180	LABEL, BELT SET EN	1							
7-1	1	1E6C86-97450	LABEL, G.BELT EN	1						F	1
	(A=F800248)										
8	1	1E6B35-97190	LABEL, STEERING EN	1							
9	1	1E6B30-97201	LABEL, MAIN CHANGE	1							
10	1	1E6B35-97200	LABEL,ENGINE ROOM EN	1							
11	1	1E6C45-97200	LABEL, CLUTCH OPERAT	1							
12	1	1E6B35-97230	LABEL, KEY SWITCH EN	1							
13	1	1E6C47-97250	LABEL,EMERGENCY EN	1							
14	1	1E6C47-97260	LABEL, BLOW FUSE EN	1							
15	1	1E6C49-97270	LABEL, FUSE EN	1							
16	1	1E6B30-97281	LABEL, SUB CHANGE	1							
17	1	1E6B30-97291	LABEL, TH.RE. CLUTCH	1							
18	1	1E6C43-97340	LABEL,BELT SET. R EN	1							
19	1	1E6C80-97600	LABEL, SA	1							
19-1	1	1E6C80-97590	LABEL, SMARTASSIST	1						N	
	(A=F800063)										
20	1	1E6C47-97700	LABEL, CHECK EN	1							
20-1	1	1E6C47-97701	LABEL, CHECK EN	1						N	
	(A=F800033)										
21	1	22695-320321	RIVET, 3.2X 3.2	4							
22	1	41802-310040	EMBLEM,FY SOFT L04	1							

Remarks
(1)No.7-1, Fig.139 No.4-1 interchangeable by set.

N:Old $\xleftarrow[\text{No}]{\text{Yes}}$ New, Q:Old $\xleftarrow[\text{Yes}]{\text{No}}$ New, R:Old $\xleftarrow[\text{Yes}]{\text{Yes}}$ New, S:Old $\xleftarrow[\text{No}]{\text{No}}$ New, W:Add, Z:Discontinued, F:Interchangeable by set, K:Q'ty Change

Copyright (C) 2018 YANMAR CO., LTD. All RightsReserved.

Fig.156. LABEL(SAFETY)(1)

(A)=AW70GV,RSX(F)-IN (D)=
(B)= (E)=
(C)= (F)=

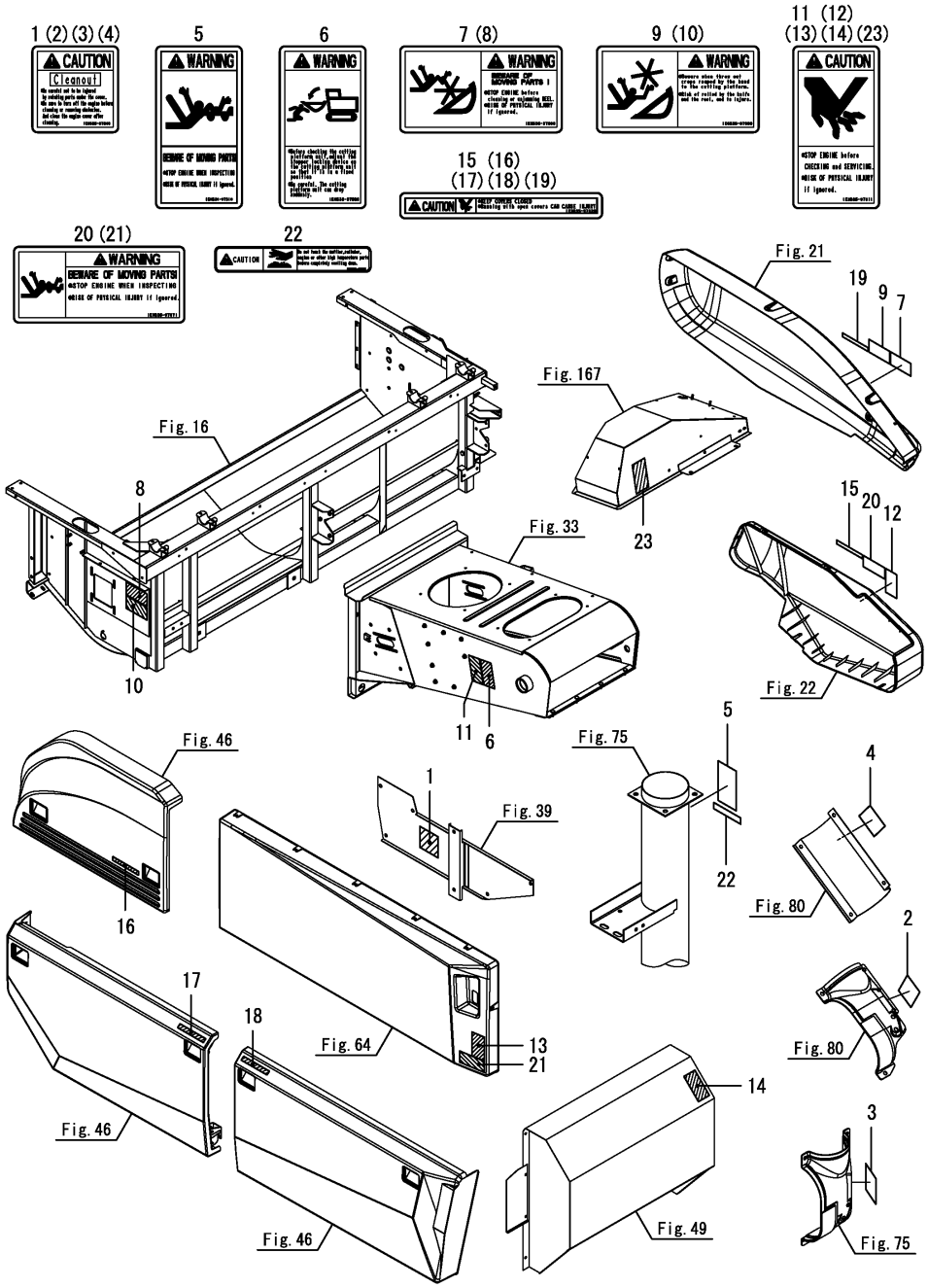

No.	Lev.	Parts No.	Description	Q'ty (A)	(B)	(C)	(D)	(E)	(F)	I	R
1	1	1E6B35-97240	LABEL, CLEAN EN	1							
2	1	1E6B35-97240	LABEL, CLEAN EN	1							
3	1	1E6B35-97240	LABEL, CLEAN EN	1							
4	1	1E6B35-97240	LABEL, CLEAN EN	1							
5	1	1E6B36-97310	LABEL, WARNING CHECK	1							
6	1	1E6B35-97880	LABEL, WARNING CHECK	1							
7	1	1E6B35-97890	LABEL, WARNING REEL	1							
8	1	1E6B35-97890	LABEL, WARNING REEL	1							
9	1	1E6B35-97900	LABEL, WARNING PF	1							
10	1	1E6B35-97900	LABEL, WARNING PF	1							
11	1	1E6B35-97911	LABEL, STOP EN	1							
12	1	1E6B35-97911	LABEL, STOP EN	1							
13	1	1E6B35-97911	LABEL, STOP EN	1							
14	1	1E6B35-97911	LABEL, STOP EN	1							
15	1	1E6B35-97920	LABEL, CAUTION COVER	1							
16	1	1E6B35-97920	LABEL, CAUTION COVER	1							
17	1	1E6B35-97920	LABEL, CAUTION COVER	1							
18	1	1E6B35-97920	LABEL, CAUTION COVER	1							
19	1	1E6B35-97920	LABEL, CAUTION COVER	1							
20	1	1E6B35-97971	LABEL, WARNING CHECK	1							
21	1	1E6B35-97971	LABEL, WARNING CHECK	1							
22	1	1E6B35-97980	LABEL, MUFFLER EN	1							
22-1	1	1C754C-95930	LABEL,CAUTION G	1						R	
	(A=F800033)										
23	1	1E6B35-97911	LABEL, STOP EN	1						W	
	(A=F800033)										

N:Old $\xleftarrow[\text{No}]{\text{Yes}}$ New, Q:Old $\xleftarrow[\text{Yes}]{\text{No}}$ New, R:Old $\xleftarrow[\text{Yes}]{\text{Yes}}$ New, S:Old $\xleftarrow[\text{No}]{\text{No}}$ New, W:Add, Z:Discontinued, F:Interchangeable by set, K:Q'ty Change

Copyright (C) 2018 YANMAR CO., LTD. All RightsReserved.

Fig.157. LABEL(SAFETY)(2)

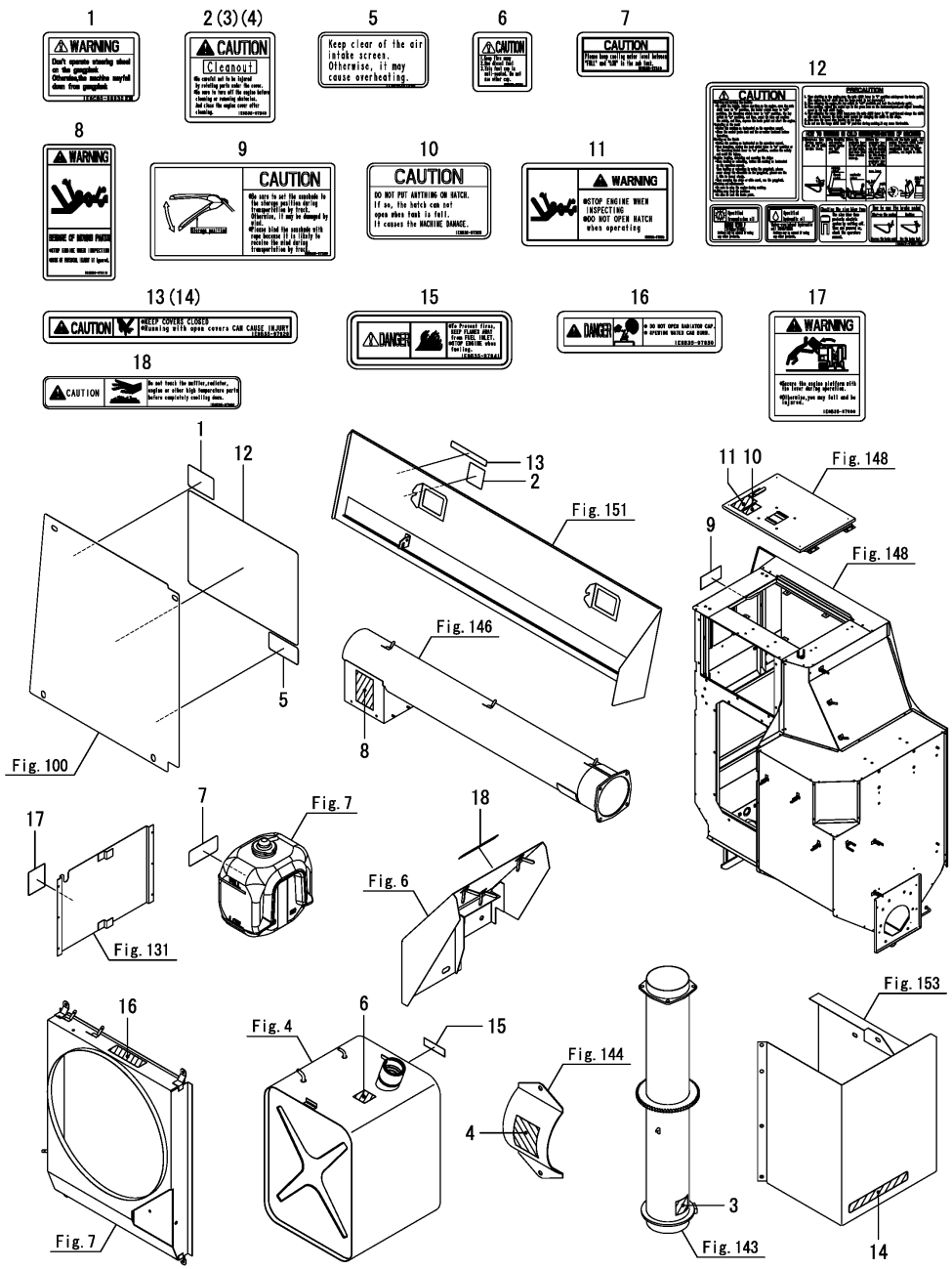

(A)=AW70GV,RSX(F)-IN (D)=
(B)= (E)=
(C)= (F)=

No.	Lev.	Parts No.	Description	Q'ty (A)	(B)	(C)	(D)	(E)	(F)	I	R
1	1	1E6C80-96930	LABEL,WARN. LOAD EN	1							
1-1	1	1E6B35-97270	LABEL, WARNING	1						N	
	(A=F800033)										
2	1	1E6B35-97240	LABEL, CLEAN EN	1							
3	1	1E6B35-97240	LABEL, CLEAN EN	1							
4	1	1E6B35-97240	LABEL, CLEAN EN	1							
5	1	1E6B35-97250	LABEL, ROOM EN	1							
6	1	1E6B35-97301	LABEL, CAUTION FO EN	1							
7	1	1E6B35-97310	LABEL, SUB TANK EN	1							
8	1	1E6B36-97310	LABEL, WARNING CHECK	1							
9	1	1E6B35-97320	LABEL, SUN VISOR EN	1							
10	1	1E6B36-97320	LABEL, TANK COVER EN	1							
11	1	1E6B36-97330	LABEL, WARNING CHECK	1							
12	1	1E6C47-97821	LABEL, OPE. CHECK EN	1							
13	1	1E6B35-97920	LABEL, CAUTION COVER	1							
14	1	1E6B35-97920	LABEL, CAUTION COVER	1							
15	1	1E6B35-97941	LABEL, DANG. FIRE EN	1							
16	1	1E6B35-97950	LABEL, RADIATOR EN	1							
17	1	1E6B35-97960	LABEL, OPEN EN	1							
18	1	1E6B35-97980	LABEL, MUFFLER EN	1							
18-1	1	1C754C-95930	LABEL,CAUTION G	1							R
	(A=F800033)										

N:Old $\xleftarrow[\text{No}]{\text{Yes}}$ New, Q:Old $\xleftarrow[\text{Yes}]{\text{No}}$ New, R:Old $\xleftarrow[\text{Yes}]{\text{Yes}}$ New, S:Old $\xleftarrow[\text{No}]{\text{No}}$ New, W:Add, Z:Discontinued, F:Interchangeable by set, K:Q'ty Change

Copyright (C) 2018 YANMAR CO., LTD. All RightsReserved.

Fig.158. TOOL

(A)=AW70GV,RSX(F)-IN
(B)=
(C)=
(D)=
(E)=
(F)=

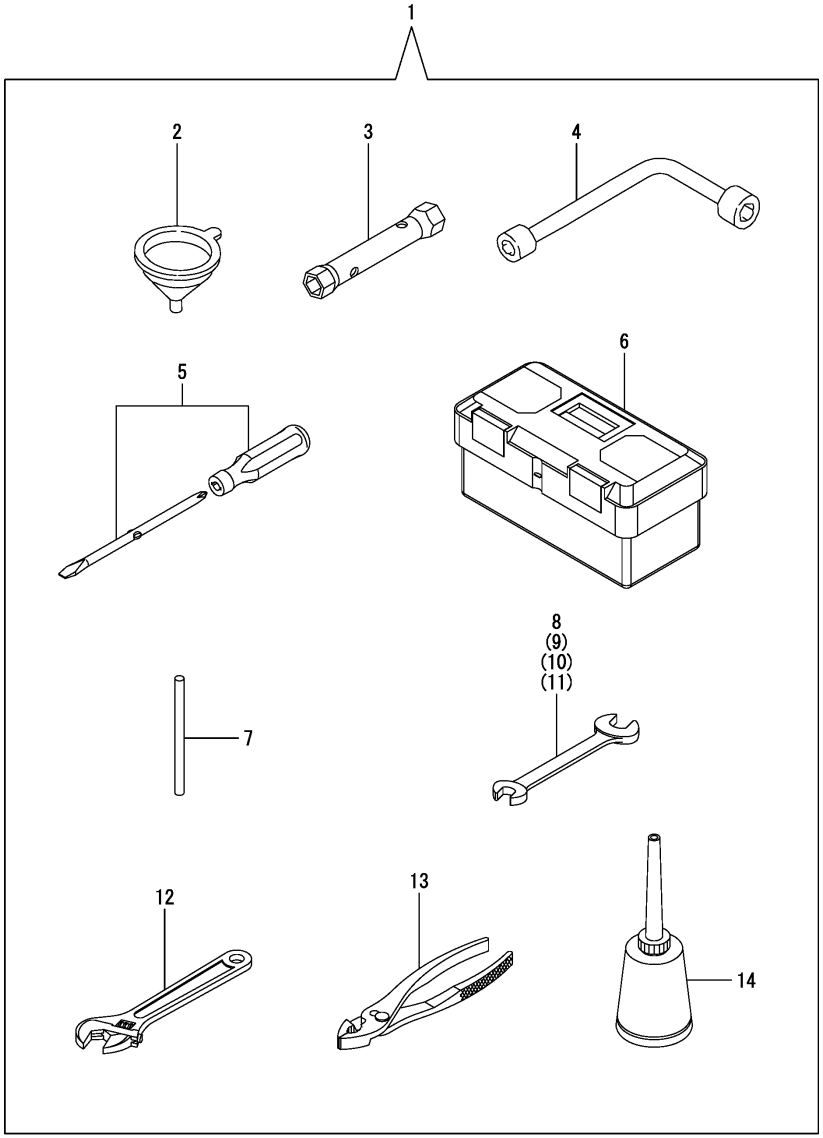

No.	Lev.	Parts No.	Description	Q'ty (A)	(B)	(C)	(D)	(E)	(F)	I	R
1	1	7E6B30-98100	TOOL ASSY	1							
2	2	192010-09050	FUNNEL	1							
3	2	1E8559-98020	WRENCH, BOX 17X19	1							
4	2	1E8559-98050	WRENCH, BOX 12X12	1							
5	2	1E8559-98060	DRIVER, SCREW	1							
6	2	1E6B30-98100	BOX, TOOL	1							
7	2	23061-120300	PIPE, 12X 300	1							
8	2	28110-100120	SPANNER, 10X12	1							
9	2	28110-120140	SPANNER, 12X14	1							
10	2	28110-170190	SPANNER, 17X19	1							
11	2	28110-220240	SPANNER, 22X24	1							
12	2	28120-002000	WRENCH, 200	1							
13	2	28170-001500	PLIER	1							
14	2	28210-000140	OILER	1							

N:Old $\xleftrightarrow[\text{No}]{\text{Yes}}$ New, Q:Old $\xleftrightarrow[\text{Yes}]{\text{No}}$ New, R:Old $\xleftrightarrow[\text{Yes}]{\text{Yes}}$ New, S:Old $\xleftrightarrow[\text{No}]{\text{No}}$ New, W:Add, Z:Discontinued, F:Interchangeable by set, K:Q'ty Change

Copyright (C) 2018 YANMAR CO., LTD. All RightsReserved.

Fig.159. ACCESSORY

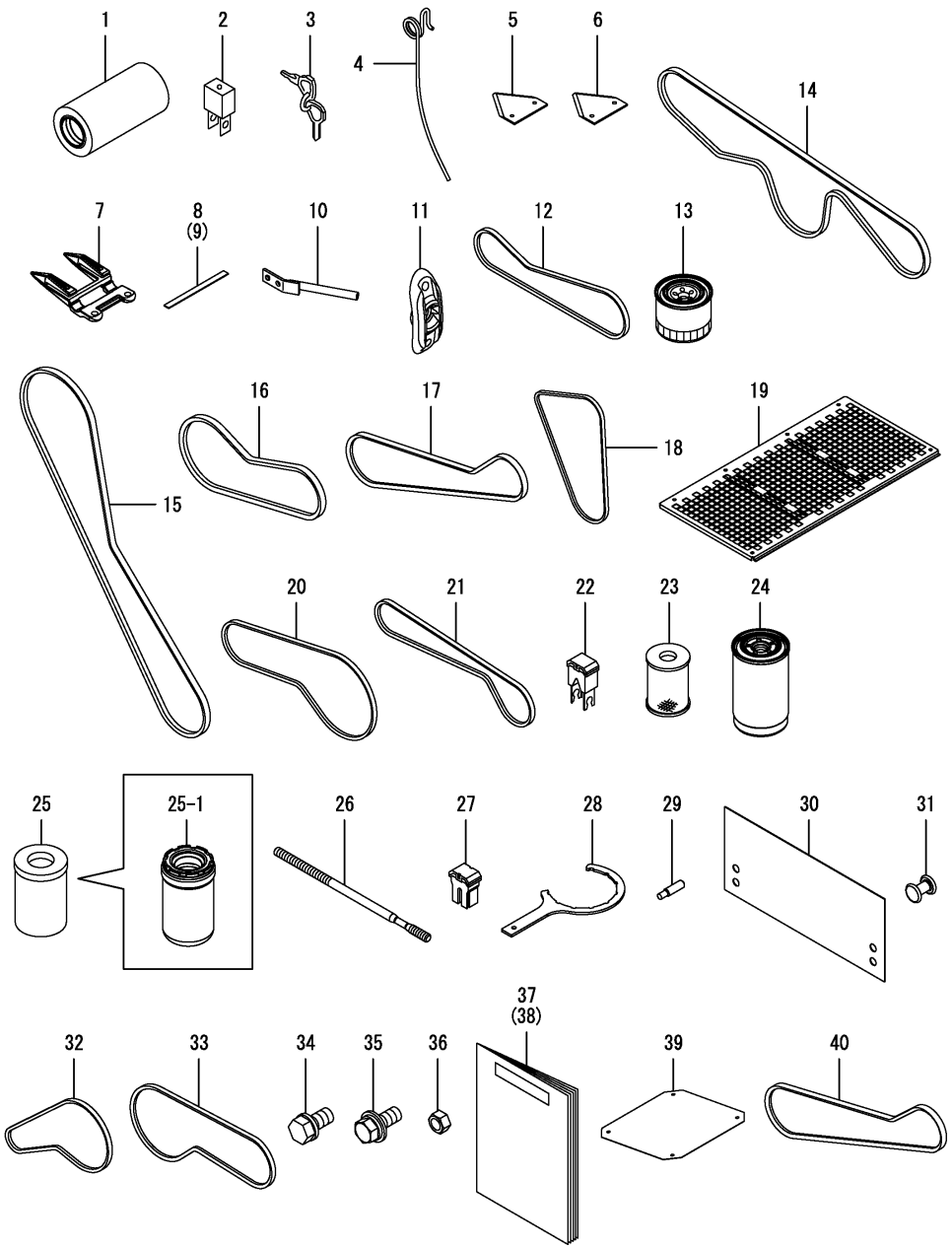

(A)=AW70GV,RSX(F)-IN (D)=
(B)= (E)=
(C)= (F)=

No.	Lev.	Parts No.	Description	Q'ty (A)	(B)	(C)	(D)	(E)	(F)	I	R
1	1	1E6B30-04020	ELEMENT, CLEANER 7.5	1							
2	1	1C6900-06180	FUSE, SLOW BLOW 80A	1							
3	1	1C7020-06440	KEY ASSY, REVERSE	1							
4	1	1E6B30-13060	TINE	5							
5	1	1E6B30-17070	REAPING EDGE	14							
6	1	1S7596-17071	REAPING EDGE, N	2							
7	1	1E6B30-17101	BACKING EDGE, A	6							
8	1	1E6B30-17920	SHIM, 0.4	3							
9	1	1E6B30-17930	SHIM, 0.8	3							
10	1	1E6B30-18100	DIVIDER,INNER	1							
11	1	1E6B30-22400	GUIDE, FINGER	10							
12	1	1E8300-35050	V-BELT, LB58-AG8	3							
13	1	119005-35160	FILTER, OIL 80X100L	1							
14	1	1E6B30-35290	V-BELT, LC109-AG6	1							
15	1	1E6C80-35510	V-BELT, LC109-AG8	2							
16	1	1E6C80-36180	V-BELT, LC58-AG8	1							
17	1	1E6C80-36370	V-BELT, LC70-AG8	2							
17-1	1	1E6C80-36370	V-BELT, LC70-AG8	1						K	
	(A=F800063)										
18	1	129972-42290	V-BELT, A47.0	1							
18-1	1	123658-42290	BELT, A48	1						N	
	(A=F800033)										
19	1	1E6C80-42800	NET,19	1							
20	1	1E6C80-51340	V-BELT,LB62 AG8	3							
21	1	1E8230-51600	V-BELT, LB60-AG6	1							
21-1	1	25123-006004	V BELT, SB 60 H4	1						N	
	(A=F800248)										
22	1	1A6240-51630	FUSE, SLOW BLOW 60A	1							
23	1	129A00-55730	ELEMENT, FUEL FILTER	1							
24	1	129907-55801	FILTER, FUEL	2							
25	1	1E8560-66370	ELEMENT ASSY	1							
25-1	1	1E6C80-66030	CARTRIDGE ASSY	1						S	
	(A=F800033)										
26	1	1E9060-73031	BOLT, TENSION 350	2							
26-1	1	1E9060-73032	BOLT,TENSION 350	2						R	
	(A=*2018.09)										
27	1	1E8540-83220	FUSE, SLOW BLOW 60A	1							
28	1	1E6C40-92750	WRENCH, PRE FILTER	1							
29	1	1E6B01-93480	PIN, SHEAR 6.5	2							
30	1	1E6B30-98140-1	SHUTTER, WINNOWER B	2							
31	1	22641-500160	RIVET, 5.0X16	28							
32	1	25123-004602	V-BELT, B46H	1							
33	1	25123-005802	V BELT, SB 58 H2	1							
34	1	26013-080162	BOLT, M8X 16	4							
35	1	26014-080202	BOLT, M8X 20	2							
36	1	26717-080002	NUT, M8	2							
37	1	0A341-EN0091	OPERATION MANUAL	1							
37-1	1	0A341-EN0092	OPERATION MANUAL	1						N	
	(A=F800206)										
38	1	0A352-EN0140	OPERATION MANUAL	1						W	
	(A=F800033)										

N:Old $\xleftrightarrow[\text{No}]{\text{Yes}}$ New, Q:Old $\xleftrightarrow[\text{Yes}]{\text{No}}$ New, R:Old $\xleftrightarrow[\text{Yes}]{\text{Yes}}$ New, S:Old $\xleftrightarrow[\text{No}]{\text{No}}$ New, W:Add, Z:Discontinued, F:Interchangeable by set, K:Q'ty Change

++ CONTINUE ++

Copyright (C) 2018 YANMAR CO., LTD. All RightsReserved.

Fig.159. ACCESSORY

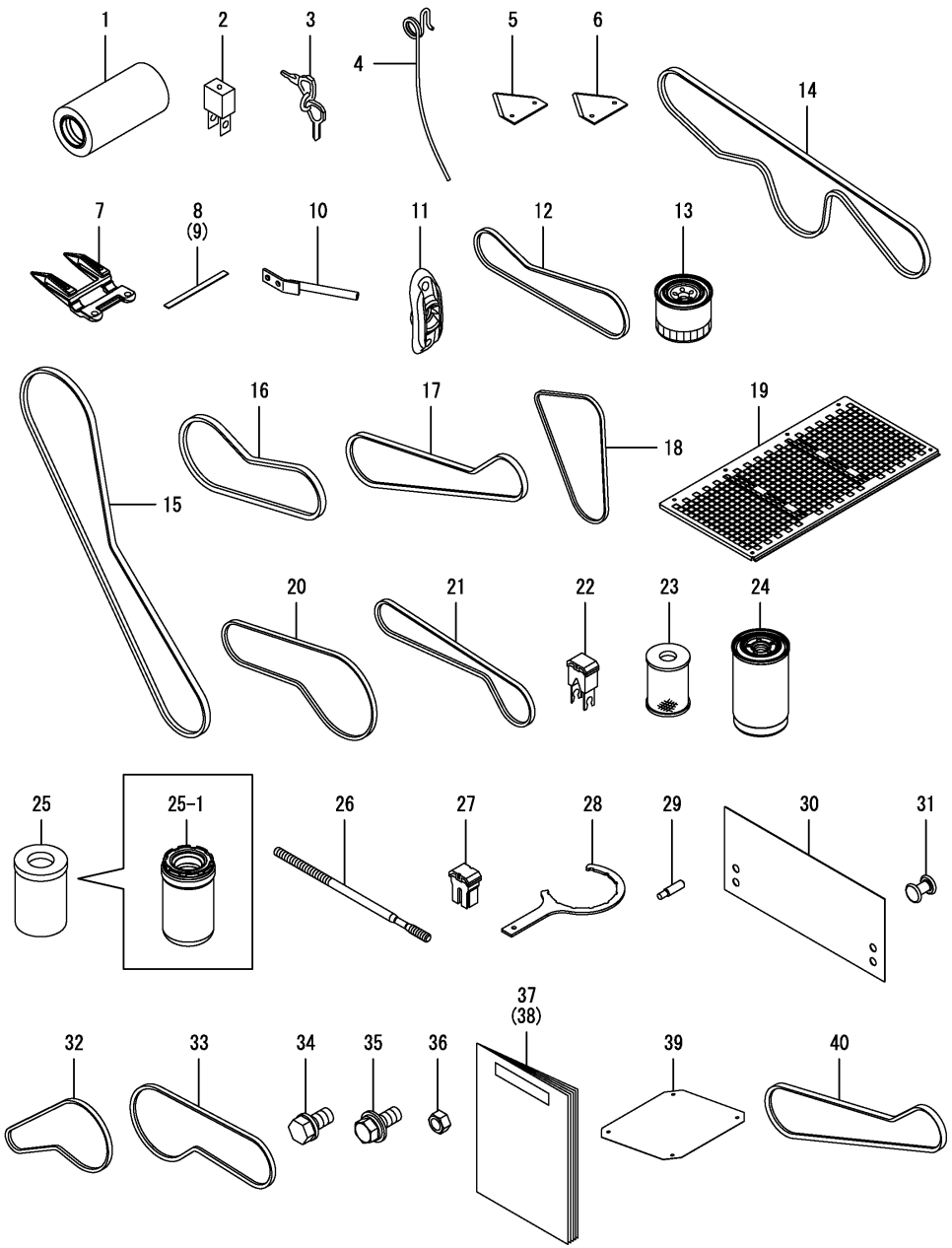

(A)=AW70GV,RSX(F)-IN (D)=
(B)= (E)=
(C)= (F)=

No.	Lev.	Parts No.	Description	Q'ty (A)	(B)	(C)	(D)	(E)	(F)	I	R
38-1	1 (A=F800206)	0A352-EN0141	OPERATION MANUAL	1						N	
39	1 (A=F800033)	1E6C80-28700	COVER,FH UPPER B	1						W	
40	1 (A=F800063)	1E6C85-17560	V-BELT,SC70 REC H-P4	1						W	

N:Old $\xleftarrow[\text{No}]{\text{Yes}}$ New, Q:Old $\xleftarrow[\text{Yes}]{\text{No}}$ New, R:Old $\xleftarrow[\text{Yes}]{\text{Yes}}$ New, S:Old $\xleftarrow[\text{No}]{\text{No}}$ New, W:Add, Z:Discontinued, F:Interchangeable by set, K:Q'ty Change

Copyright (C) 2018 YANMAR CO., LTD. All RightsReserved.

Parts No. Index

Parts No.	Fig. No.	Ref. No.
0A341-EN0091	159	37
0A341-EN0092	159	37 -1
0A352-EN0140	159	38
0A352-EN0141	159	38 -1
101504-55101	4	19
106990-44660	4	15
		16
		17
	7	16
119005-35160	159	13
119225-52102	4	18
119934-55611	4	20
123658-42290	159	18 -1
129242-55740	4	28
129907-55801	4	31
	159	24
129972-42290	159	18
129A00-55720	4	26
129A00-55730	4	27
	159	23
129A00-55740	4	29
129A00-55751	4	23
129A00-55760	4	24
129A00-55770	4	30
129E00-55710	4	22
129E22-55700	4	21
158557-61720	81	7
158802-85880	94	40
158802-85890	94	41
158805-85420	94	26
158850-85810	94	39
158856-85502	94	35
158856-85580	94	37
158856-85702	94	38
1683J3-02200	114	6
168H8S-29540	94	14
		19
168HJ1-85031	94	33
168HJ1-85490	94	34
168HM4-29320	94	7
168HM4-29610	94	20
168HM6-29190	94	4
168HM6-29420	94	10
168HM6-29820	94	22
168HM7-29020	94	2
168HM7-29180	94	25
168HM7-29910	94	24
168HN5-29200	94	5
168HN5-29510	94	15
168HN5-29810	94	21

Parts No.	Fig. No.	Ref. No.
168HN6-29100	94	3
168HN6-29250	94	6
168HN6-29350	94	8
168HN6-29370	94	13
168HN6-29380	94	18
168HN6-29410	94	9
168HN6-29450	94	11
168HN6-29520	94	16
168HP1-85570	94	36
168PHB-11750	94	12
		17
172141-76900	111	25
	112	11 -1
		17
172510-74410	114	7
172645-76570	112	15
192010-09050	158	2
194680-51670	135	18
		35
194697-62560	147	1
194990-22130	170	2
194990-22140	170	3
195295-13210	19	1
198071-24350	84	24 -1
1A1120-28170	19	16
1A6240-51630	135	8
	159	22
1A6260-24410	84	25
1A6260-25150	97	2
1A6382-51510	135	7
1A6750-29850	94	23
1A8296-51640	101	2
	137	1
1B1604-14840	91	1
1C6900-06180	135	6
	159	2
1C7020-06400	99	1
1C7020-06440	159	3
1C7200-07150	101	1
1C726C-47910	107	2
1C726C-76210	113	72
1C726C-76220	113	73
1C727C-26480	109	1
1C728C-54470	87	7
1C730C-36280	75	3
	80	2
1C730C-63240	105	2
1C730C-95590	133	14
1C731C-47130	107	1
1C731C-95990	155	1

Parts No.	Fig. No.	Ref. No.
1C754C-95930	156	22 -1
	157	18 -1
1E4110-24010	19	15
	160	13
1E4760-43090	105	1
1E6140-51170	19	17
1E6192-53660	85	9
1E6470-29630	36	9
1E6470-29640	36	10
1E6480-52141	85	5
1E6650-54850	85	10
1E6680-13890	19	2
	160	2
1E6680-17100	19	6
1E6680-17110	19	7
1E6680-17130	19	8
1E6680-17150	19	10
1E6680-35021	97	3
1E6680-73031	123	4
		19
1E6680-73040	123	5
		20
1E6681-05050	130	1
1E6681-83430	134	7
1E6681-92730	144	24
1E6682-17053	19	3
1E6682-17070	19	4
1E6682-17080	19	5
1E6682-17140	19	9
1E6750-92020-1	144	7
1E6750-94710	142	13
	144	40
1E6A10-73420	127	4
1E6B00-03280	38	1
1E6B00-52460	86	4
1E6B00-52480	86	5
1E6B00-52800	95	3
1E6B00-52840	95	4
1E6B00-53050	84	3
1E6B00-53060	84	4
1E6B00-53090	84	6
1E6B00-53180	96	1
1E6B00-53350	84	7
1E6B00-53361	84	8
1E6B00-54420	87	2
1E6B00-54440	87	4
1E6B00-54560	87	10
1E6B00-55090	89	4
1E6B00-55110	89	1
1E6B00-55140	89	8

Parts No.	Fig. No.	Ref. No.
1E6B00-55380	90	6
	91	2
1E6B00-55450	91	6
1E6B00-55470	91	7
1E6B00-56110	92	2
1E6B00-56120	92	3
1E6B00-56130	92	4
1E6B00-56200	92	5
1E6B00-56300	93	1
1E6B00-56310	93	2
1E6B00-56400	93	4
1E6B00-62350	34	17
	92	6
1E6B00-63070	82	10
1E6B00-68100	117	1
1E6B00-68500	118	2
1E6B00-83200	134	4
1E6B01-91760-2	141	3
1E6B01-91770	141	4
1E6B01-91800	146	4
1E6B01-91920	141	5
1E6B01-91930	141	6
1E6B01-91950-2	145	2
1E6B01-92010-2	144	6
1E6B01-92020-2	144	8
1E6B01-92110-2	144	11
1E6B01-92250	144	14
1E6B01-92260	144	15
1E6B01-92270	144	16
1E6B01-92280	144	17
1E6B01-92330	144	20
1E6B01-92340	144	21
1E6B01-92430	143	2
1E6B01-92880	147	4
1E6B01-93480	150	2
	159	29
1E6B01-94000	142	11
1E6B01-94080	142	12
1E6B30-00150	1	1
1E6B30-01200	3	4
1E6B30-03060	4	1
1E6B30-03080	4	2
1E6B30-03131	4	5
1E6B30-03180	4	4
1E6B30-03181	4	4 -1
1E6B30-03340	4	6
1E6B30-03500	7	1
1E6B30-03531	4	9
1E6B30-03560	4	10
1E6B30-04010	5	2

Parts No. Index

Parts No.	Fig. No.	Ref. No.
1E6B30-04020	5	4
	159	1
1E6B30-04030	5	5
1E6B30-04120	7	5
1E6B30-04132	7	6
1E6B30-04260	5	8
1E6B30-04261	5	8 -1
1E6B30-04360	5	12
1E6B30-04381	5	13
1E6B30-04430	7	10
1E6B30-04430-1	7	10 -1
1E6B30-04450	7	11
1E6B30-04480	7	12
1E6B30-04730-1	5	15
1E6B30-04930	7	14
1E6B30-13060	11	3
		8
	159	4
1E6B30-13300	9	4
	10	4
1E6B30-13350	9	5
	10	5
1E6B30-13350-1	9	5 -1
	10	5 -1
1E6B30-13480	11	5
1E6B30-13540	11	10
1E6B30-13550	12	1
1E6B30-13600	12	2
1E6B30-13611	12	3
1E6B30-13621	12	4
1E6B30-13631	12	5
1E6B30-13680	12	7
1E6B30-13680-1	12	7 -1
1E6B30-13701	12	8
1E6B30-13701-1	12	8 -1
1E6B30-13711	12	9
1E6B30-13951	13	2
1E6B30-14050	14	2
	15	1
1E6B30-14061-1	14	3
1E6B30-14070	14	4
1E6B30-14280	15	6
1E6B30-15041	16	2
1E6B30-16801	16	3
1E6B30-17021	17	4
1E6B30-17030	17	5
1E6B30-17070	17	7
	159	5
1E6B30-17101	17	15
	159	7

Parts No.	Fig. No.	Ref. No.
1E6B30-17120	17	16
1E6B30-17130	17	17
1E6B30-17140	17	18
1E6B30-17151	17	19
1E6B30-17170	17	20
1E6B30-17200	17	21
1E6B30-17290	17	10
	140	1
1E6B30-17870	17	29
	18	11
1E6B30-17890	17	30
	18	12
1E6B30-17920	159	8
1E6B30-17930	159	9
1E6B30-18004	20	1
1E6B30-18100	159	10
1E6B30-18203	20	2
1E6B30-22230	24	4
1E6B30-22280	24	5
1E6B30-22400	24	7
	159	11
1E6B30-22410	24	8
1E6B30-22421	24	9
1E6B30-22530	24	11
1E6B30-22600	24	16
1E6B30-22612	24	17
1E6B30-22621	24	18
1E6B30-22800-2	25	5 -1
1E6B30-22850	25	6
1E6B30-22900	26	1
1E6B30-22900-2	26	1 -1
1E6B30-26040-1	27	1
1E6B30-26102	27	2
	162	2
1E6B30-26160	27	4
	162	4
1E6B30-26170	27	5
	162	5
1E6B30-26180	27	6
	162	6
1E6B30-26230	28	2
1E6B30-26240	28	3
1E6B30-26280	28	5
1E6B30-26600	38	2
	169	1
1E6B30-26610	35	1
1E6B30-26652	34	1
1E6B30-26680	34	2
1E6B30-26690	34	3
1E6B30-26703	35	2

Parts No.	Fig. No.	Ref. No.
1E6B30-26821	35	4
1E6B30-26841	34	4
1E6B30-26902	34	5
1E6B30-26912	34	6
1E6B30-26924	34	7
1E6B30-26951	34	8
1E6B30-26960	34	9
1E6B30-27020	27	8
	162	8
1E6B30-27610	31	2
	164	3
1E6B30-27620	31	3
	164	4
1E6B30-27630	31	4
	164	5
1E6B30-27640	31	5
	164	6
1E6B30-27712	32	2
	165	3
1E6B30-27713	165	3 -1
1E6B30-28570-2	33	2
1E6B30-28690	33	3
	166	3
1E6B30-28901	34	10
1E6B30-28911	34	11
1E6B30-28960	34	12
1E6B30-28970	34	13
1E6B30-29280	36	7
1E6B30-29310	36	8
		16
1E6B30-29430	36	18
1E6B30-31360	37	1
1E6B30-31360-1	37	1 -1
1E6B30-32103	41	1
1E6B30-32153	41	2
1E6B30-32250	41	3
1E6B30-32261	40	6
1E6B30-32270	40	7
1E6B30-32640	38	7
	169	5
1E6B30-32641	169	5 -1
1E6B30-33511	38	8
	169	6
1E6B30-33521	38	9
	169	7
1E6B30-34142-1	46	1
1E6B30-34142-2	46	1 -1
1E6B30-34170	64	1
1E6B30-34470	133	2
1E6B30-34490	46	5

Parts No.	Fig. No.	Ref. No.
1E6B30-34490-1	46	5 -1
1E6B30-34700	45	1
1E6B30-34700-1	45	1 -1
1E6B30-34731	45	2
1E6B30-34903-1	46	7
1E6B30-35100	51	1
	54	1
1E6B30-35120	19	1 -1
	50	11
	97	4
	160	14
1E6B30-35130	50	13
	97	5
	160	15
1E6B30-35230	52	4
1E6B30-35290	52	5
	159	14
1E6B30-35350	52	10
1E6B30-35411	53	2
1E6B30-35451	53	3
1E6B30-35580	54	9
1E6B30-35600	54	10
1E6B30-35620	52	12
	54	11
	55	3
1E6B30-35640	54	12
1E6B30-35720	53	4
1E6B30-35760	53	6
	72	3
1E6B30-35780	53	7
	72	4
1E6B30-35800	53	8
1E6B30-36041	57	3
1E6B30-36400	34	14
1E6B30-36501	59	3
1E6B30-36530	23	5
	28	6
1E6B30-36560	8	5
	18	14
	23	6
	28	7
1E6B30-36590	59	4
1E6B30-36610	59	5
1E6B30-36630	34	16
1E6B30-38220	60	5
1E6B30-38230	60	6
1E6B30-38260	60	17
1E6B30-38270	60	7
1E6B30-38650	61	3
1E6B30-38700-1	61	7

Parts No. Index

Parts No.	Fig. No.	Ref. No.
1E6B30-38790	61	9
1E6B30-38830	61	10
1E6B30-39001	62	1
1E6B30-39250-1	63	1
1E6B30-39260-1	63	2
1E6B30-39351-1	64	5
1E6B30-39430	64	6
1E6B30-39431	64	6 -1
1E6B30-39480	64	7
1E6B30-39980	64	12
1E6B30-39990	64	13
1E6B30-42011	65	1
1E6B30-42030	65	3
1E6B30-42051	66	1
1E6B30-42101	66	2
1E6B30-42190	69	2
	171	2
1E6B30-42200	69	3
1E6B30-42201	69	3 -1
	171	3
1E6B30-42240	65	6
1E6B30-42250	65	7
1E6B30-42470	70	2
	172	2
1E6B30-42730	68	3
	170	5
1E6B30-42740	68	4
	170	6
1E6B30-42750	70	3
	172	3
1E6B30-42761	68	5
1E6B30-42762	170	7
1E6B30-42771	68	6
1E6B30-42772	170	8
1E6B30-42780	68	7
	170	9
1E6B30-42790	70	4
	172	4
1E6B30-42830	68	9
	170	11
1E6B30-42911	68	13
	170	15
1E6B30-42920	68	14
	170	16
1E6B30-42930	68	16
	170	18
1E6B30-42940	68	18
	170	19
1E6B30-42951	68	19
	170	20

Parts No.	Fig. No.	Ref. No.
1E6B30-42961	68	21
	170	22
1E6B30-43712	71	1
1E6B30-45104-1	75	4
	80	3
1E6B30-45110	75	5
	80	4
1E6B30-45130	75	6
	80	5
1E6B30-45191-1	75	10
	80	9
1E6B30-45201	75	11
	80	10
1E6B30-45302	75	12
1E6B30-45680	77	3
1E6B30-45700-2	78	1
1E6B30-45750	74	4
	79	2
1E6B30-46406	80	11
1E6B30-46407	80	11 -1
1E6B30-46480-1	80	12
1E6B30-46571	81	3
1E6B30-46582	81	4
1E6B30-46582-1	81	4 -1
1E6B30-46600	81	5
1E6B30-46720	81	6
1E6B30-51040	82	5
1E6B30-51051-1	82	6
1E6B30-51100	83	1
1E6B30-51100-1	83	1 -1
1E6B30-51151	82	7
1E6B30-51800	82	9
1E6B30-52410	86	2
1E6B30-52450	86	3
1E6B30-53171	97	7
1E6B30-53180	97	8
1E6B30-53600	84	9
1E6B30-53650	84	10
1E6B30-54411	87	1
1E6B30-54430	87	3
1E6B30-54440	87	5
1E6B30-54450	87	6
1E6B30-54500	88	1
1E6B30-55030	89	3
1E6B30-55110	86	7
1E6B30-55121	89	5
1E6B30-55150	89	6
1E6B30-55210	90	1
1E6B30-55221	90	2
1E6B30-55260	90	4

Parts No.	Fig. No.	Ref. No.
1E6B30-55270	90	5
1E6B30-55300	89	9
1E6B30-55430	91	5
1E6B30-61301	99	4
1E6B30-61350	99	5
1E6B30-61410	99	6
1E6B30-61990	100	5
1E6B30-61990-1	100	5 -1
1E6B30-62211	100	9
1E6B30-62310-1	101	7
1E6B30-62350	101	8
1E6B30-62360	101	9
1E6B30-62950	111	1
1E6B30-63001	104	6
1E6B30-63051	104	7
1E6B30-63101-2	104	8
1E6B30-63160-1	104	10
1E6B30-64000	106	7
1E6B30-64051	106	8
1E6B30-64620	106	17
1E6B30-64630	106	18
1E6B30-65300	108	3
	109	7
1E6B30-66000	110	1
1E6B30-66070	113	11
1E6B30-66100	113	48
		49
1E6B30-66110	113	50
1E6B30-66120	113	51
		52
1E6B30-66130	113	12
		27
		28
		58
1E6B30-66140	113	13
		29
		30
		59
1E6B30-66180	113	14
		31
		60
1E6B30-66220	112	2
1E6B30-66230	111	2
1E6B30-66260	112	3
1E6B30-66290	111	5
1E6B30-66330	113	32
		33
1E6B30-66340	113	15
		34
1E6B30-66350	113	16

Parts No.	Fig. No.	Ref. No.
1E6B30-66350	113	23
1E6B30-66360	111	6
1E6B30-66370	111	7
1E6B30-66380	111	8
1E6B30-66390	111	9
1E6B30-66400	110	6
1E6B30-66430	111	10
1E6B30-66450	112	10
1E6B30-66470	113	17
		35
		61
1E6B30-66480	111	12
1E6B30-66490	111	13
1E6B30-66510	113	6
1E6B30-66511	113	6 -1
1E6B30-66520	113	7
		63
1E6B30-66530	113	8
1E6B30-66540	113	18
		24
1E6B30-66560	113	8 A
		65
1E6B30-66570	113	19
		25
1E6B30-66580	113	53
1E6B30-66610	113	9
		20
		36
		66
1E6B30-66620	113	10
		21
		37
		67
1E6B30-66720	113	38
1E6B30-66730	113	39
1E6B30-66740	113	40
1E6B30-66750	113	41
1E6B30-66760	113	42
1E6B30-66790	113	43
1E6B30-66870	113	44
1E6B30-66950	113	45
1E6B30-67130	113	46
1E6B30-67231	115	2
1E6B30-67300	113	47
1E6B30-67450	115	6
1E6B30-67490	115	7
1E6B30-67500	115	9
1E6B30-67570	115	11
1E6B30-67810	115	8
1E6B30-67820	115	10

Parts No. Index

Parts No.	Fig. No.	Ref. No.
1E6B30-67830	115	13
1E6B30-68101	116	3
1E6B30-68401-2	118	1
1E6B30-68501	118	3
1E6B30-68602-1	118	4
1E6B30-69002	119	1
1E6B30-69200	119	2
1E6B30-69950	119	6
1E6B30-69960	119	7
1E6B30-69970	119	8
1E6B30-73040-1	123	34
1E6B30-73070	124	6
	125	5
1E6B30-73250	124	9
	125	8
1E6B30-73260	124	13
	125	13
1E6B30-73261	124	13 -1
	125	13 -1
1E6B30-73440	121	2
1E6B30-75180	132	3
1E6B30-75800	131	24
1E6B30-75810	131	26
1E6B30-75852	131	31
1E6B30-75950	131	35
1E6B30-77101-1	133	3
1E6B30-77300	133	4
1E6B30-77331	133	5
1E6B30-81880	136	2
1E6B30-83170	134	2
1E6B30-83180	134	3
1E6B30-84920	135	22
1E6B30-84950	137	3
1E6B30-97201	155	9
1E6B30-97281	155	16
1E6B30-97291	155	17
1E6B30-98100	158	6
1E6B30-98140-1	159	30
1E6B31-01111	3	1
1E6B31-04780	5	16
1E6B31-45402	76	2
1E6B31-45471	76	3
1E6B31-45570	77	1
1E6B31-45602	77	2
1E6B31-45700	77	4
1E6B31-45900	77	5
1E6B31-45900-1	77	5 -1
1E6B31-66080	113	22
1E6B31-66090	113	26
1E6B31-66500	113	5

Parts No.	Fig. No.	Ref. No.
1E6B31-66510	113	62
1E6B31-66530	113	64
1E6B31-69301	119	3
1E6B31-72560	113	71
1E6B31-75460	5	18
1E6B31-91010	138	3
1E6B31-91040	139	8
1E6B31-91071	138	5
1E6B31-91100	139	9
1E6B31-91201-1	139	10
1E6B31-91252	139	11
1E6B31-91270	139	13
1E6B31-91401	139	14
1E6B31-91501	139	16
1E6B31-92020-2	141	7
	144	9
1E6B31-92660-1	146	6
1E6B31-92690	146	8
1E6B31-94180	116	7
	137	6
	148	10
1E6B31-94262-1	148	12
1E6B31-94360	148	13
1E6B31-94450	148	15
1E6B31-94460	148	16
1E6B31-94470	148	17
1E6B31-94501-1	148	18
1E6B31-94580-1	148	19
1E6B31-94600	149	1
1E6B31-94600-1	149	1 -1
1E6B31-94680	149	3
1E6B31-94700	149	4
1E6B31-94781	149	5
1E6B31-94800-1	151	2
1E6B31-94830-1	148	20
1E6B31-94900	148	21
1E6B31-95340-1	152	2
1E6B32-97080	155	3
1E6B34-04250	5	7
1E6B34-84700	135	21
1E6B34-89200	135	25
1E6B34-91250-2	139	12
1E6B34-92080	140	2
1E6B34-92180	142	5
1E6B35-04530	6	1
1E6B35-04551	6	2
1E6B35-18500-2	20	3
1E6B35-18700-2	20	4
1E6B35-31481	42	1
1E6B35-31640	38	5

Parts No.	Fig. No.	Ref. No.
1E6B35-31640	169	3
1E6B35-31680	38	6
	169	4
1E6B35-33110-1	43	3
1E6B35-33130-1	43	4
1E6B35-33170-1	43	5
1E6B35-44300	73	1
1E6B35-44500	73	2
1E6B35-44550	73	3
1E6B35-44602	38	11
	169	8
1E6B35-97100	154	7
1E6B35-97110	154	8
1E6B35-97141	154	9
1E6B35-97160	154	10
1E6B35-97170	154	11
1E6B35-97190	155	8
1E6B35-97200	155	10
1E6B35-97230	155	12
1E6B35-97240	156	1
		2
		3
		4
	157	2
		3
		4
1E6B35-97250	157	5
1E6B35-97270	157	1 -1
1E6B35-97301	157	6
1E6B35-97310	157	7
1E6B35-97320	157	9
1E6B35-97880	156	6
1E6B35-97890	156	7
		8
1E6B35-97900	156	9
		10
1E6B35-97911	156	11
		12
		13
		14
		23
1E6B35-97920	156	15
		16
		17
		18
		19
	157	13
		14
1E6B35-97941	157	15
1E6B35-97950	157	16

Parts No.	Fig. No.	Ref. No.
1E6B35-97960	157	17
1E6B35-97971	156	20
		21
1E6B35-97980	156	22
	157	18
1E6B36-97170	155	6
1E6B36-97180	155	7
1E6B36-97310	156	5
	157	8
1E6B36-97320	157	10
1E6B36-97330	157	11
1E6C35-80500	167	16
1E6C35-80501	167	16 -1
1E6C40-01171	3	3
1E6C40-01200	3	5
1E6C40-03403	4	7
1E6C40-03500	4	8
1E6C40-03590	4	11
1E6C40-03660	4	12
1E6C40-04100	7	4
1E6C40-04151	7	7
1E6C40-04280	4	13
		14
	5	10
1E6C40-04290	5	10 -1
1E6C40-04311	7	8
1E6C40-04400	7	9
1E6C40-04480	7	13
1E6C40-04830	6	8
1E6C40-04890	6	9
		10
1E6C40-17003	17	2
1E6C40-17013	17	3
1E6C40-17040	17	6
1E6C40-19850	22	2
1E6C40-22570	24	15
1E6C40-26150	27	3
	162	3
1E6C40-26260	28	4
1E6C40-27010	27	7
1E6C40-27011	27	7 -1
	162	7
1E6C40-27040	27	9
		9 -1
	162	9
1E6C40-27300	30	4
	163	5
1E6C40-27600	31	1
	164	2
1E6C40-27650	31	7

Parts No. Index

Parts No.	Fig. No.	Ref. No.
1E6C40-27650	164	8
1E6C40-29530	36	25
1E6C40-29550	36	26
1E6C40-29680	36	28
1E6C40-32281-1	42	2
1E6C40-33650	38	10
	63	5
1E6C40-33650-1	63	5 -1
1E6C40-36580	34	15
1E6C40-38001	60	1
1E6C40-38010	60	2
1E6C40-38150	60	3
1E6C40-38190	60	4
1E6C40-38281	60	8
1E6C40-38301	60	9
1E6C40-38400	60	18
1E6C40-38471	60	19
1E6C40-38490	60	20
1E6C40-38690-1	61	6
1E6C40-39300	64	4
1E6C40-39600	64	9
1E6C40-39610	64	10
1E6C40-39630	64	11
1E6C40-42130	67	1
1E6C40-42170	67	2
1E6C40-43150	68	23
	170	24
1E6C40-52910	86	6
1E6C40-53000	84	2
1E6C40-53160	97	6
1E6C40-53200	97	9
1E6C40-55410	91	3
1E6C40-55411	91	3 -1
1E6C40-55420	91	4
1E6C40-55421	91	4 -1
1E6C40-55550	86	8
1E6C40-61000-1	99	2
1E6C40-61190-1	99	3
1E6C40-61410	99	7
	101	3
		4
1E6C40-61440	99	8
1E6C40-61870	100	3
1E6C40-61900	100	4
1E6C40-62001	101	5
1E6C40-62140-1	100	7
1E6C40-62180	100	8
1E6C40-62700-1	101	11
1E6C40-63140	104	9
1E6C40-63140-1	104	9 -1

Parts No.	Fig. No.	Ref. No.
1E6C40-64050	101	13
1E6C40-64140	106	10
1E6C40-64221	107	4
1E6C40-64260	107	5
1E6C40-64550	106	14
1E6C40-64560	106	15
1E6C40-64600	106	16
1E6C40-66070	105	3
1E6C40-66161-1	105	4
1E6C40-66200	112	1
1E6C40-66210	105	5
1E6C40-66260	111	3
		4
1E6C40-66300	112	4
1E6C40-66310	112	5
1E6C40-66341	105	6
1E6C40-66390	112	9
1E6C40-66410	105	7
1E6C40-66440	105	8
1E6C40-66500	105	9
1E6C40-66530	114	1
1E6C40-66650	105	10
1E6C40-66670-1	105	11
1E6C40-66700	112	12
1E6C40-66710	105	12
1E6C40-66760	111	15
1E6C40-66771	114	2
1E6C40-66800	111	16
1E6C40-66830	111	17
1E6C40-66850	111	18
1E6C40-66860	111	19
1E6C40-66870	111	20
1E6C40-66890	111	21
1E6C40-66930	111	22
1E6C40-66961	105	13
1E6C40-66971	105	14
1E6C40-67260	115	3
1E6C40-67410	115	5
1E6C40-67800	115	4
1E6C40-68051	116	1
1E6C40-69150	111	23
1E6C40-69550	119	5
1E6C40-72710	122	2
1E6C40-73020	123	3
		18
1E6C40-73080	123	7
		22
1E6C40-73152	123	8
		23
1E6C40-73162	123	9

Parts No.	Fig. No.	Ref. No.
1E6C40-73162	123	24
1E6C40-73360	127	6
1E6C40-73500	126	1
1E6C40-73950	129	1
1E6C40-75301-1	131	3
1E6C40-75381	131	4
1E6C40-75400-1	131	5
1E6C40-75450	131	7
1E6C40-75471	131	9
1E6C40-75501-1	131	12
1E6C40-75550-1	131	14
1E6C40-75611	131	16
1E6C40-75621	131	17
1E6C40-75631	131	18
1E6C40-75641	131	19
1E6C40-75670-1	131	20
1E6C40-75700-1	131	21
1E6C40-75750	131	22
1E6C40-75750-1	131	22 -1
1E6C40-75771	131	23
1E6C40-75771-1	131	23 -1
1E6C40-75801	131	25
1E6C40-75810	131	27
1E6C40-75820	131	28
1E6C40-75830	131	29
1E6C40-75840	131	30
1E6C40-75850	131	32
1E6C40-75861	131	33
1E6C40-75870	131	34
1E6C40-75970	130	3
1E6C40-81300	99	10
1E6C40-81500	101	15
	103	1
	133	10
		12
	142	2
1E6C40-81510	101	16
	103	2
	133	11
		13
	142	3
1E6C40-81950-1	136	3
1E6C40-82303	99	13
1E6C40-83151-1	134	1
1E6C40-83200	134	5
1E6C40-92750	159	28
1E6C41-04300	5	11
1E6C41-45501	75	13
1E6C41-66210	113	1
1E6C41-66230	113	2

Parts No.	Fig. No.	Ref. No.
1E6C41-66500	113	5 -1
1E6C41-75461	131	8
1E6C41-75471	131	10
1E6C41-75502	131	13
1E6C41-81851	137	2
1E6C41-91020	138	4
1E6C41-91080	138	6
1E6C41-91090	138	7
1E6C41-91150	138	8
1E6C41-91180	138	9
1E6C41-91190	138	1
1E6C41-91470	139	15
1E6C41-92680-1	146	7
1E6C41-93210	148	7
1E6C41-94150-2	148	8
1E6C41-94210-2	148	11
1E6C41-94400-2	148	14
1E6C41-94401	148	14 -1
1E6C41-94601	149	2
1E6C41-95300	152	1
1E6C41-95350	152	3
1E6C41-95430	152	4
1E6C41-95460	152	5
1E6C42-66260	113	3
1E6C42-66550	113	57
1E6C42-66600	113	57 -1
1E6C42-66650	113	68
1E6C42-66660	113	69
1E6C42-66670	113	70
1E6C42-84202	135	16
1E6C42-91621	143	1
1E6C42-91751	146	3
1E6C42-91851-1	146	5
1E6C42-91852	146	5 -1
1E6C42-92000-3	144	5
1E6C42-92301	142	9
1E6C42-92500	140	3
1E6C42-92752-1	147	2
1E6C42-92801-2	147	3
1E6C42-92900	146	10
1E6C42-92901	146	10 -1
1E6C42-92902	146	10 -2
1E6C42-93004-1	148	6
1E6C42-93440	150	1
1E6C42-94500-3	145	5
1E6C42-94670-3	145	6
1E6C42-95801	153	1
1E6C42-95832	153	2
1E6C43-00150	2	1
1E6C43-03400	4	7 -1

Parts No. Index

Parts No.	Fig. No.	Ref. No.
1E6C43-04250	5	7 -1
1E6C43-04251	5	7 -2
1E6C43-26680	34	2 -1
1E6C43-38500	61	2
1E6C43-38510	61	1
1E6C43-45600	77	2 -1
1E6C43-51050	82	6 -1
1E6C43-53160	97	6 -1
1E6C43-54330	98	3 -1
1E6C43-55030	89	3 -1
1E6C43-55470	91	7 -1
1E6C43-61500	100	2
1E6C43-61501	100	2 -1
1E6C43-62050	101	6
1E6C43-62110	100	6
1E6C43-62140	100	7 -1
1E6C43-62250	100	10
1E6C43-62270	100	10 -1
1E6C43-62450	101	10
1E6C43-62910	101	12
1E6C43-64200	107	3
1E6C43-65400	48	4
1E6C43-65450	48	6
1E6C43-65460	101	14
1E6C43-66350	112	6 -1
1E6C43-66360	112	7 -1
1E6C43-67201	115	1 -1
1E6C43-67210	115	1
1E6C43-68350	116	6
1E6C43-76000	130	4
1E6C43-76400	130	5
1E6C43-84000	135	5
1E6C43-84001	135	5 -1
1E6C43-92180	142	6 -1
1E6C43-92430	143	2 -1
1E6C43-92500	140	3 -1
1E6C43-94000	142	11 -1
1E6C43-94160	148	9
1E6C43-97010	154	3
1E6C43-97020	154	4
1E6C43-97090	154	6
	155	4
1E6C43-97340	155	18
1E6C45-04002	5	1
1E6C45-04010	5	3
1E6C45-04230	5	6
1E6C45-04270	5	9
1E6C45-04400	5	14
1E6C45-04551	6	3
1E6C45-04700	6	5

Parts No.	Fig. No.	Ref. No.
1E6C45-04790	5	17
1E6C45-33002-1	43	2
1E6C45-33502-1	43	1
1E6C45-33503-1	43	1 -1
1E6C45-51010	82	4
1E6C45-68200	116	5
1E6C45-68200-1	116	5 -1
1E6C45-73060	123	6
		21
1E6C45-73520	126	2
1E6C45-83220	134	6
1E6C45-97200	155	11
1E6C46-73400	121	1
1E6C47-73000	125	2
1E6C47-73010	124	3
1E6C47-73100	124	1
1E6C47-73200	125	1
1E6C47-97140	155	5
1E6C47-97190	154	12
1E6C47-97250	155	13
1E6C47-97260	155	14
1E6C47-97700	155	20
1E6C47-97701	155	20 -1
1E6C47-97821	157	12
1E6C48-65300	102	1
1E6C49-71000	120	1
1E6C49-71001	120	1 -1
1E6C49-71002	120	1 -2
1E6C49-73100	124	1 -1
1E6C49-73110	124	3 -1
1E6C49-73200	125	1 -1
1E6C49-73210	125	2 -1
1E6C49-97050	154	5
	155	2
1E6C49-97270	155	15
1E6C80-01150	3	2 -1
1E6C80-01170	3	3 -1
1E6C80-01200	3	4 -1
1E6C80-04600	6	4
1E6C80-04760	6	6
1E6C80-04810	6	7
1E6C80-12200	8	2
1E6C80-13450	11	4
1E6C80-13520	11	9
1E6C80-14250	15	5
1E6C80-14290	15	7
1E6C80-16850	16	4
1E6C80-19900	16	9
1E6C80-21550	23	4
1E6C80-22000	24	3

Parts No.	Fig. No.	Ref. No.
1E6C80-22360	24	6
1E6C80-22500	24	10
1E6C80-22540	24	12
1E6C80-22550	24	13
1E6C80-22560	24	14
1E6C80-22720	25	2
1E6C80-22730	25	3
1E6C80-22760	25	4
1E6C80-22800	25	5
1E6C80-23000	24	1
1E6C80-26500	29	1
1E6C80-26740	35	3
1E6C80-27050	27	17
	162	10
1E6C80-27090	27	15 -1
	162	11
1E6C80-27100	30	1
1E6C80-27130	30	2
	163	2
1E6C80-27150	30	1 -1
	163	3
1E6C80-27151	163	3 -1
1E6C80-27200	30	3
	163	4
1E6C80-27350	30	5
	163	6
1E6C80-27380	30	6
	163	7
1E6C80-27700	32	1
	165	2
1E6C80-28001	33	1
1E6C80-28300	167	2
1E6C80-28700	33	4
	159	39
1E6C80-29100	36	1
1E6C80-29100-1	36	1 -1
1E6C80-29150	36	2
1E6C80-29150-1	36	2 -1
1E6C80-29200-1	36	3
1E6C80-29201-1	36	3 -1
1E6C80-29210-1	36	4
1E6C80-29220-1	36	5
		15
1E6C80-29250	36	6
1E6C80-29310	36	8 -1
		16 -1
1E6C80-29400-1	36	14
1E6C80-29401-1	36	14 -1
1E6C80-29410-1	36	17
1E6C80-29450	36	19

Parts No.	Fig. No.	Ref. No.
1E6C80-29650	36	27
1E6C80-31002	38	3
1E6C80-31003	168	1
1E6C80-31004	168	1 -1
1E6C80-31005	168	1 -2
1E6C80-31006	168	1 -3
1E6C80-31400	39	1
1E6C80-31450	39	2
1E6C80-31470	38	4
	169	2
1E6C80-32000	40	1
1E6C80-32020	40	2
1E6C80-32020-1	40	2 -1
1E6C80-32150	41	1 -1
1E6C80-32151	41	1 -2
1E6C80-32180	40	3
1E6C80-32190	40	4
1E6C80-32200	40	5
1E6C80-32320	40	8
1E6C80-33750	40	9
1E6C80-33800	40	10
1E6C80-33930	44	1
1E6C80-33940	44	2
1E6C80-33950	44	3
1E6C80-34200	48	1
1E6C80-34230	46	2
1E6C80-34250	47	1
1E6C80-34300	46	3
1E6C80-34301	46	3 -1
1E6C80-34340	46	4
1E6C80-34341	46	4 -1
1E6C80-34350	47	2
1E6C80-34360	47	3
1E6C80-34370	47	4
1E6C80-34400	49	1
1E6C80-34450	49	2
1E6C80-34500	64	2
1E6C80-34650	46	6
1E6C80-34651	46	6 -1
1E6C80-34900	46	8
	151	1
1E6C80-34910	46	9
1E6C80-35020	50	2
		2 -1
1E6C80-35030	50	3
1E6C80-35040	50	4
		4 -1
1E6C80-35050	50	5
1E6C80-35060	50	6
1E6C80-35070	50	7 -1

Parts No. Index

Parts No.	Fig. No.	Ref. No.
1E6C80-35080	50	7
1E6C80-35081	50	7 A
1E6C80-35090	50	8
1E6C80-35091	50	7 B
1E6C80-35102	50	9
1E6C80-35103	50	9 -1
1E6C80-35111	50	10
1E6C80-35112	50	10 -1
1E6C80-35120	50	12
1E6C80-35130	50	14
1E6C80-35140	54	2
1E6C80-35151	54	3
1E6C80-35152	54	3 -1
1E6C80-35153	54	3 -2
1E6C80-35211	51	2
1E6C80-35212	51	2 -1
1E6C80-35220	51	3
1E6C80-35230	54	5
1E6C80-35250	54	6
1E6C80-35300	52	7
1E6C80-35310	52	8
1E6C80-35330	54	13
1E6C80-35350	50	19 -1
1E6C80-35360	54	14 -1
1E6C80-35380	54	15 -1
1E6C80-35400	52	11
1E6C80-35450	54	32
1E6C80-35470	54	34
1E6C80-35500	54	7
1E6C80-35510	54	8
	159	15
1E6C80-35740	53	5
1E6C80-36000	55	4
1E6C80-36001	55	4 -1
1E6C80-36010	55	5
1E6C80-36020	56	1
1E6C80-36030	51	4
1E6C80-36040	55	5 -1
1E6C80-36100	55	6
1E6C80-36140	55	7
1E6C80-36150	55	8
1E6C80-36180	55	9
	159	16
1E6C80-36200	72	5
1E6C80-36240	57	4
1E6C80-36250	56	2
1E6C80-36301	57	5
1E6C80-36370	18	13
	56	3
	159	17

Parts No.	Fig. No.	Ref. No.
1E6C80-36370	159	17 -1
1E6C80-36400	56	4
1E6C80-36400-1	56	4 -1
1E6C80-36450	59	2
1E6C80-36450-1	59	2 -1
1E6C80-36500-1	58	2 -1
1E6C80-36510	34	15 -1
1E6C80-36520	59	5 -1
1E6C80-36530	58	1 -1
1E6C80-36530-1	58	1 -2
1E6C80-36550	58	1
1E6C80-36600	58	2
1E6C80-38730	61	8
1E6C80-39500	64	8
1E6C80-42020	65	2
1E6C80-42800	159	19
1E6C80-42891	68	10
1E6C80-42892	170	12
1E6C80-42920	68	15
1E6C80-42921	170	17
1E6C80-42930	68	17
1E6C80-42950	68	20
1E6C80-42951	170	21
1E6C80-42960	68	22
	170	23
1E6C80-42970	69	4
	171	4
1E6C80-42980	69	5
	171	5
1E6C80-42990	69	6
	171	6
1E6C80-43000	69	7
1E6C80-43010	69	8
1E6C80-43050	69	9
1E6C80-43100	69	10
	171	10
1E6C80-43160	69	11
1E6C80-43180	69	12
1E6C80-43190	69	13
1E6C80-43200	69	14
		14 -1
	171	12
1E6C80-43800	47	6
1E6C80-44050	168	2
1E6C80-44250	72	6
1E6C80-44251	72	6 -1
1E6C80-44310	72	7
1E6C80-44320	51	5
1E6C80-44321	51	5 -1
1E6C80-44330	72	8

Parts No.	Fig. No.	Ref. No.
1E6C80-44350	51	6
1E6C80-45080	74	3
1E6C80-45690	78	1 -1
1E6C80-46090	79	3
1E6C80-46091	79	3 -1
1E6C80-46830	38	12
	169	9
1E6C80-46850	63	6
1E6C80-46900-1	63	6 -1
1E6C80-51120	82	1 -1
1E6C80-51160	82	10 -1
1E6C80-51340	83	2
	159	20
1E6C80-51501	83	3
1E6C80-51502	83	3 -1
1E6C80-51600	83	4
1E6C80-51700	83	5
1E6C80-51701-1	83	5 -1
1E6C80-65000	109	2
1E6C80-65030	109	3
1E6C80-65060	109	4
1E6C80-65060-1	109	4 -1
1E6C80-65070	109	5
1E6C80-65090	109	6
1E6C80-65091	109	6 -1
1E6C80-65200	108	1
1E6C80-65250	108	2
1E6C80-65251	108	2 -1
1E6C80-65390	102	2
1E6C80-65400	102	3
1E6C80-65400-1	102	3 -1
1E6C80-65410	102	4
1E6C80-65430	102	5
1E6C80-65431	48	5
1E6C80-65440	102	6
1E6C80-65470	102	10
	130	2
1E6C80-65480	102	7
1E6C80-65590	102	2 -1
1E6C80-66030	112	8 -1
	159	25 -1
1E6C80-68900	118	1 -1
1E6C80-68930	118	3 -1
1E6C80-69500	119	4
1E6C80-76400	130	6
1E6C80-76400-1	130	6 -1
1E6C80-76900	130	7
1E6C80-76900-1	130	7 -1
1E6C80-96140	154	1
1E6C80-96240	154	2

Parts No.	Fig. No.	Ref. No.
1E6C80-96930	157	1
1E6C80-97590	155	19 -1
1E6C80-97600	155	19
1E6C80-97890	154	13
1E6C80-97910	154	14
1E6C81-01110	3	1 -1
1E6C81-43000	69	7 -1
	171	7
1E6C81-43010	69	8 -1
	171	8
1E6C81-43050	69	9 -1
	171	9
1E6C81-43160	69	11 -1
	171	11
1E6C81-92200	142	7
1E6C81-92251	142	8
1E6C81-92400	142	10
1E6C85-12100	8	1
1E6C85-12101	8	1 -1
1E6C85-12300	8	3
1E6C85-12400	8	4
1E6C85-12500	8	4 -1
1E6C85-13000	9	1
1E6C85-13200	10	1
1E6C85-13230	9	2
	10	2
1E6C85-13250	9	3
	10	3
1E6C85-13251	9	3 -1
	10	3 -1
1E6C85-13251-1	9	3 -2
	10	3 -2
1E6C85-13640	12	6
1E6C85-13800	13	1
1E6C85-13801	13	1 -1
1E6C85-14000	14	1
1E6C85-14001	14	1 -1
1E6C85-14100	14	5
1E6C85-14101	14	5 -1
1E6C85-14200	15	2
1E6C85-14210	15	2 -1
1E6C85-14211	15	2 -2
1E6C85-14220	15	3
1E6C85-14230	15	4
1E6C85-14250	15	3 -1
1E6C85-14260	15	4 -1
1E6C85-14310	15	8
1E6C85-14400	15	9
1E6C85-14401	15	9 -1
1E6C85-15000	16	1

Parts No. Index

Parts No.	Fig. No.	Ref. No.
1E6C85-15001	16	1 -1
1E6C85-15002	16	1 -2
1E6C85-15003	16	1 -3
1E6C85-17100	17	1
1E6C85-17300	160	3
1E6C85-17310	160	4
1E6C85-17320	160	5
1E6C85-17330	160	6
1E6C85-17340	160	7
1E6C85-17350	160	8
1E6C85-17360	160	9
1E6C85-17361	160	9 -1
1E6C85-17370	160	10
1E6C85-17380	160	11
1E6C85-17390	160	12
1E6C85-17400	160	35
1E6C85-17410	160	37 -1
1E6C85-17420	19	12
	160	36
1E6C85-17430	18	2
1E6C85-17440	19	13
1E6C85-17441	160	37
1E6C85-17450	18	3
1E6C85-17490	18	4
1E6C85-17500	18	5
1E6C85-17521	18	6
1E6C85-17530	18	7
1E6C85-17540	19	14
	160	38
1E6C85-17550	18	8
1E6C85-17560	18	13 -1
	159	40
1E6C85-17570	18	9
1E6C85-17580	18	1 -1
1E6C85-17590	18	28 -1
1E6C85-17850	18	10
1E6C85-17851	18	10 -1
1E6C85-17860	17	28
1E6C85-17870	18	37
1E6C85-18200	20	2 -1
1E6C85-19300	21	1
1E6C85-19500	21	2
1E6C85-19800	22	1
1E6C85-19801	22	1 -1
1E6C85-21030	23	1
1E6C85-21031	23	1 -1
1E6C85-21040	23	2
1E6C85-21500	23	3
1E6C85-22700	25	1
1E6C85-26200	28	1

Parts No.	Fig. No.	Ref. No.
1E6C85-26300	28	1 -1
1E6C85-31440	70	1
1E6C85-31441	70	1 -1
	172	1
1E6C85-31950	168	7
1E6C85-33110	43	3 -1
1E6C85-33310	168	9
1E6C85-35200	54	4
1E6C85-42452	68	1
1E6C85-42453	68	1 -1
1E6C85-42454	68	1 -2
1E6C85-42455	170	1
1E6C85-42501	68	2
1E6C85-42502	68	2 -1
1E6C85-42503	170	4
1E6C85-42800	68	8
	170	10
1E6C85-42890	68	11
	170	13
1E6C85-42900	68	12
	170	14
1E6C85-43350	69	18
	171	16
1E6C85-73350	127	1
1E6C85-73400	127	2
1E6C85-73410	127	3
1E6C86-97450	155	7 -1
1E6D10-04030	5	11 -1
1E6D10-26610-1	35	1 -1
1E6D10-26700	35	2 -1
1E6D10-26740	35	3 -1
1E6D10-26820	35	4 -1
1E6D10-28000	33	1 -1
	166	2
1E6D10-28080	161	1
1E6D10-28081	161	1 -1
1E6D10-28082	161	1 -2
1E6D10-28780	33	9 -1
	161	2
1E6D10-28860	33	2 -1
	166	4
1E6D10-28880	33	11
	166	5
1E6D10-34200	48	1 -1
1E6D10-34201	48	1 -2
1E6D10-34251	47	1 -1
1E6D10-34252	47	1 -2
1E6D10-34350	47	2 -1
1E6D10-34360	47	3 -1
1E6D10-34361	47	3 -2

Parts No.	Fig. No.	Ref. No.
1E6D10-34370	47	4 -1
1E6D10-34371	47	4 -2
1E6D10-92550	146	6 -1
1E6D15-12300	8	3 -1
1E8050-52230	85	7
1E8050-66590	111	14
1E8050-66790	110	7
1E8080-92950	145	3
1E8130-66220	110	4
1E8230-14400	69	1
	171	1
1E8230-51600	139	4
	159	21
1E8230-85503	114	3
1E8230-85511	114	4
1E8230-85520	114	8
1E8230-85530	114	9
1E8230-85540	114	10
1E8235-52050	85	3
1E8235-52090	85	4
1E8235-52210	85	6
1E8235-73330	145	1
1E8235-84910	135	14
		20
1E8255-81180	106	20
	109	12
	139	5
1E8270-29510	36	20
1E8270-29520	36	21
1E8300-35050	82	3
	159	12
1E8300-94780	115	14
1E8330-85530	111	29
	113	75
1E8361-35430	124	2
1E8379-54580	87	11
	88	2
1E8380-01200	3	6
1E8380-73020	123	32
1E8420-73150	128	6
1E8420-73160	128	7
1E8440-52013	85	1
1E8440-52020	85	2
1E8450-55230	90	3
1E8450-73770-1	128	10
1E8450-84321	130	12
1E8450-84900	135	19
1E8460-56640	94	32
1E8530-42900	95	2
1E8540-35070	132	1

Parts No.	Fig. No.	Ref. No.
1E8540-66770	112	13
1E8540-82100	101	17
1E8540-82210	101	18
1E8540-83220	135	12
	159	27
1E8540-84101	1	3
1E8540-92501	144	22
1E8540-92511	144	23
1E8550-00160	1	2
1E8550-63800	106	4
1E8550-66150-1	110	3
1E8550-68060	116	2
1E8550-75440	131	6
1E8550-77400-2	133	6
1E8550-84220	106	22
	109	14
	139	7
1E8550-85760	61	4
1E8550-97880	135	26
1E8552-65650	109	9
1E8552-75110	131	2
1E8555-54330	98	3
1E8555-54340	98	5
1E8559-01220	3	7
1E8559-03080	4	3
1E8559-11060	50	18 -1
	84	1
1E8559-12500	18	1
	52	1
		2
	53	1
	59	1
	122	1
1E8559-17110	75	1
	128	1
		4
1E8559-18220	133	1
1E8559-22220	52	3
	55	1
	57	1
	72	1
	104	1
1E8559-23840	139	1
1E8559-24150	82	1
1E8559-29130	6	11
		12
	82	2
1E8559-32940	7	15
1E8559-33760	139	2
1E8559-35161	55	2

Parts No. Index

Parts No.	Fig. No.	Ref. No.
1E8559-35161	57	2
1E8559-35170	72	2
	104	2
1E8559-35290	6	13
	52	6
1E8559-35310-1	52	9
1E8559-35380	74	1
	76	1
	79	1
	81	1
1E8559-35700	64	3
	104	3
		4
1E8559-48150	33	5
	148	1
	166	6
	167	3
1E8559-51660-2	52	12 -1
1E8559-51670	104	5
1E8559-61970	99	9
1E8559-63130	34	18
1E8559-63481	106	1
		2
1E8559-63660	104	11
1E8559-63860	106	5
1E8559-64220	106	11
1E8559-64230	106	12
1E8559-64250-1	106	13
1E8559-65690	109	10
1E8559-65700	109	11
1E8559-66300	110	5
	160	16
1E8559-66770	112	14
1E8559-67030	113	4
1E8559-68160	116	4
1E8559-73030	124	4
	125	3
1E8559-73060	124	5
	125	4
1E8559-73080	124	7
	125	6
1E8559-73100	124	8
	125	7
1E8559-73130	128	5
1E8559-73200	128	2
1E8559-73280	54	14
		15
	82	11
1E8559-73500	128	8
1E8559-73530	128	9

Parts No.	Fig. No.	Ref. No.
1E8559-73540	124	10
	125	9
1E8559-75030	18	15
	30	7
	115	16
	163	8
1E8559-75040	132	2
1E8559-75320-2	132	4
1E8559-75340	132	5
1E8559-75370	132	6
1E8559-75390	132	7
1E8559-75580	131	15
1E8559-81240	133	9
1E8559-83090	4	32
	144	1
1E8559-84960	1	4
	7	18
	105	16
	111	27
		28
	112	19
	135	23
		24
1E8559-84970	4	33
		34
	36	29
	100	11
	108	4
	137	4
1E8559-91180	148	4
1E8559-91390-1	148	5
1E8559-98020	158	3
1E8559-98050	158	4
1E8559-98060	158	5
1E8560-66350	112	6
1E8560-66360	112	7
1E8560-66370	112	8
	159	25
1E8560-81740	148	3
1E8665-81300	99	11
		12
1E8665-82050	135	3
1E8665-83150	135	9
1E8665-83160	135	10
1E8665-83170	135	11
1E8680-91550	144	4
1E8720-97990	135	15
1E8770-81320	104	12
1E8775-81400	135	2
1E8800-68320	148	2

Parts No.	Fig. No.	Ref. No.
1E8809-04010	7	2
1E8809-13010	92	1
1E8809-83900	134	8
1E8915-81360	135	1
1E8915-81450	106	21
	109	13
	139	6
1E8923-81300	142	1
1E8923-81800	146	1
1E8923-81810	146	2
1E8940-92032-3	144	2
1E8940-92070-2	144	10
1E8940-92071	144	10 -1
1E8940-92111-1	144	12
1E8940-92200-1	144	13
1E8940-92300	144	18
1E8940-92310	144	19
1E8940-92840	146	9
1E8941-23290	141	2
1E8941-93480-1	145	4
1E8970-84820	135	13
1E8990-42150	65	4
1E8990-42170	65	5
1E8990-42250	65	8
1E9060-01150	3	2
1E9060-36010	139	3
1E9060-51720	12	10
	55	10
	56	5
	61	11
	82	8
	123	1
1E9060-52280	85	8
1E9060-53080	84	5
1E9060-54480	87	8
1E9060-54490	87	9
1E9060-55490	91	8
1E9060-55560	91	9
1E9060-55570	91	10
1E9060-61420	100	1
1E9060-63700	106	3
1E9060-63990	106	6
	132	17
1E9060-64101	106	9
1E9060-65500	109	8
		8 -1
1E9060-73031	123	33
	159	26
1E9060-73032	123	33 -1
	159	26 -1

Parts No.	Fig. No.	Ref. No.
1E9060-73050	123	35
1E9060-75490	131	11
1E9061-04160	7	7 A
1E9061-04180	7	7 B
1E9061-04190	7	7 C
1E9061-66050	110	2
1E9062-04080	7	3
1E9062-54330	98	4
1E9063-51661	54	11 -1
1E9063-56120	92	3 -1
1E9063-56320	93	3
1E9063-75000-1	131	1
1E9110-66490	112	11
1E9110-92182	142	6
1E9111-17150	19	11
1E9111-82100	101	19
1E9256-82600	99	14
		15
		16
		17
		18
		19
		20
	130	8
		9
		10
		11
	167	17
1E9265-84300	16	5
	105	15
	106	23
	113	74
	142	4
1E9300-54320	98	2
1E9355-82600	135	4
	167	18
1E9430-64800	106	19
1J5025-47010	7	17
	38	13
	169	10
1RF001-00114	136	1
1RF001-93010	137	5
1S6480-07050	135	17
1S7596-03190	4	5 -1
1S7596-03690	4	1 -1
1S7596-17071	17	8
	159	6
1S7596-17080	17	9
	24	2
1S7596-24170	17	22

Parts No. Index

Parts No.	Fig. No.	Ref. No.
1S7596-61000	167	4
1S7596-61200	167	5
1S7596-61300	167	6
1S7596-61310	167	7
1S7596-61320	167	8
1S7596-61330	167	9
1S7596-61400	167	10
1S7596-61450	167	11
1S7596-61600	167	12
1S7596-61700	167	13
1S7596-62000	167	14
1S7596-62100	167	24
1S7596-62230	167	15
1S7596-80500	167	16 -2
1S7596-84500	167	19
20230-200100	154	4 -1
20240-200100	154	4 -2
22117-080000	108	5
22117-100000	69	15
		15 -1
	109	15
	171	13
22117-120000	132	8
22137-030000	106	24
	109	16
22137-050000	105	17
	113	54
22137-060000	24	19
	27	18
	60	10
	68	24
	105	18
	146	11
	162	12
22137-080000	5	19
	30	8
	32	3
	35	5
	60	21
	64	21
	67	3
	73	4
	75	14
	80	13
	104	13
	105	19
	110	8
	132	9
	135	27
	139	17

Parts No.	Fig. No.	Ref. No.
22137-080000	149	6
	152	6
	163	9
	165	4
22137-100000	106	25
		26
	139	18
22137-120000	12	11
	18	16
	65	9
	96	2
	109	17
	121	3
	139	19
		20
22137-140000	37	2
	119	9
	124	14
	125	14
22137-160000	15	10
	36	30
	57	6
	82	2 -1
	119	10
22137-200000	15	11
	109	18
		19
22157-060000	114	18
	116	8
	131	36
		37
22157-080000	1	5
	4	35
	6	14
		15
		16
		17
		18
		19
	7	19
	12	12
	21	3
	22	3
	23	7
	33	6
	40	11
	48	2
		2 -1
	49	3
	64	14

Parts No.	Fig. No.	Ref. No.
22157-080000	68	25
	71	2
	83	6
		7
		8
	100	12
	104	14
	115	17
	119	11
	132	10
	134	9
	166	7
	168	3
22157-100000	93	5
	118	5
	130	13
22157-120000	18	17
	23	8
22190-080000	84	11
	97	10
22190-080002	94	46
22190-120002	1	6
	4	36
22190-120006	4	36 -1
22207-040320	91	11
22212-160000	123	10
		25
22217-030000	106	27
	109	20
22217-050000	142	14
22217-060000	16	6
	17	11
	24	20
	27	19
	60	11
	68	26
	74	5
	76	4
	79	5
	81	8
		9
	140	4
	146	12
	162	13
22217-080000	1	7
	32	4
	40	12
	42	3
	60	22
	61	5

Parts No.	Fig. No.	Ref. No.
22217-080000	64	15
	65	10
	66	3
	67	4
	68	27
	69	19
	73	5
	75	15
	77	6
		7
		8
	80	14
	105	20
	107	6
	110	9
	117	2
	133	7
	134	10
	135	28
	152	7
	165	5
	168	4
	171	17
22217-100000	17	23
	82	12
	83	9
	84	12
	93	6
	95	5
	106	28
	118	6
	128	11
		16
22217-120000	3	8
	18	18
	24	21
	28	8
	52	13
		14
	53	9
	59	6
	65	11
		12
	96	3
	121	4
	122	3
	139	21
	141	12
22217-140000	12	13
	17	31

Parts No. Index

Parts No.	Fig. No.	Ref. No.
22217-140000	18	19
	37	3
	55	11
	56	6
	61	12
	82	13
	124	15
	125	15
	127	5
22217-160000	33	7
	35	6
	54	16
	82	12 -1
		14
	126	3
	161	3
22217-200000	51	7
	54	17
22242-000100	69	16
	171	14
22242-000150	15	12
	53	10
	72	9
	139	22
		23
22242-000170	18	20
	69	20
	171	18
22242-000180	85	13
22242-000200	14	6
	15	13
	19	18
	54	18
	104	15
	138	10
	144	25
	152	8
	160	17
22242-000250	8	13
	138	11
	144	26
22242-000290	150	3
22242-000300	27	10
	75	7
	80	6
	144	27
	162	14
22242-000350	89	10
	138	12
	141	8

Parts No.	Fig. No.	Ref. No.
22242-000400	50	15
22242-000450	72	10
22242-000551	60	23
22252-000350	14	7
	15	14
	52	15
	53	11
	82	15
	139	24
22252-000360	94	47
22252-000401	19	19
	23	9
	28	9
	59	7
	65	13
	82	15 -1
	160	18
22252-000420	128	12
22252-000421	14	8
	17	12
	18	21
22252-000470	54	19
22252-000471	52	16
	55	12
	57	7
	65	14
	146	13
22252-000521	18	22
	19	20
	30	9
	54	20
	55	13
	74	6
	79	6
	82	16
	138	13
	144	28
	146	14
	160	19
	163	10
22252-000551	54	21
22252-000620	124	11
	125	10
22252-000621	8	6
	27	11
	61	13
	75	8
	80	7
	144	29
	162	15

Parts No.	Fig. No.	Ref. No.
22252-000650	94	48
22252-000721	19	21
		22
	25	7
	50	16
	51	8
	97	11
	123	11
		26
	141	9
	160	20
		21
22252-000751	72	11
22252-000801	34	19
	91	12
22252-000901	50	17
22272-000060	105	21
22272-000090	114	11
22272-000100	12	14
22272-000120	36	31
	107	7
	139	25
	149	7
22272-000150	52	17
	55	14
	57	8
	64	16
	72	12
	105	22
	109	21
		22
22272-000190	54	22
22312-080160	94	49
22312-080250	50	18
22351-030016	132	11
22351-030020	106	29
22351-030032	34	20
	35	7
22351-030040	19	23
	65	15
	160	22
22351-035032	92	7
22351-050032	34	21
	35	8
22351-050040	19	24
	65	16
	160	23
22351-060032	92	8
22351-060040	133	15
22372-060000	123	36

Parts No.	Fig. No.	Ref. No.
22372-080000	12	15
	115	18
22372-100000	15	15
	118	7
		8
22417-160160	105	23
		24 -1
	113	55
22417-160200	105	24
22417-200100	31	6
	164	7
22417-200150	69	17
		17 -1
	171	15
22417-200160	35	9
	104	16
		17
	139	26
		27
22417-200200	105	25
	106	30
	108	6
	109	23
	132	12
	149	8
22417-250250	57	9
	106	31
	139	28
22417-400320	36	32
22487-050160	105	26
22487-050220	113	56
22487-060400	123	37
22487-080200	7	20
22487-080700	12	16
22487-100350	15	16
22550-050300	104	18
22550-070250	51	9
22550-120450	54	23
22551-040100	94	50
22551-050150	53	12
	138	14
22551-050200	52	18
		19
	109	24
	139	29
22551-050250	65	17
22551-070150	160	39
22551-070201	19	25
	160	39 -1
22551-070250	8	7

Parts No. Index

Parts No.	Fig. No.	Ref. No.
22551-070250	18	23
	28	10
	34	22
22551-070300	8	8
	18	24
	27	12
	162	16
22551-070301	82	17
22551-070350	23	10
	54	24
22551-070400	8	8 -1
22551-070500	58	3
22641-500160	17	13
	159	31
22693-320641	27	13
	162	17
22695-320321	155	21
22695-320481	131	38
22697-400321	44	4
	69	21
	171	19
23000-013000	4	37
	7	21
23000-019000	4	38
23000-022000	1	8
	111	30
	113	76
23000-028000	111	31
	112	20
23000-035000	111	32
	112	21
23000-048000	7	22
		23
23000-090000	5	20
23000-102000	5	21
		22
23000-127000	5	23
23061-120300	158	7
23391-020000	36	33
23393-020000	111	33
	145	7
23393-030000	111	34
		35 -1
23394-020000	36	34
23394-030000	111	35
23414-160000	123	12
		27
23490-120002	50	19
23490-200002	19	26
23980-730550	7	24

Parts No.	Fig. No.	Ref. No.
24101-060044	128	13
24101-062034	19	27
	160	24
24101-062054	19	28
	97	12
	160	25
24101-062064	125	11
24101-062074	19	29
		30
	123	13
		28
	160	26
		27
24101-063024	19	31
	160	28
24101-063044	19	32
	160	29
24104-060034	53	13
	82	18
24104-060044	14	9
24104-060064	54	25
24104-060074	138	15
24104-060084	34	23
24104-060094	72	13
24104-062024	14	10
	15	17
	52	20
	139	30
24104-062034	23	11
	28	11
	59	8
	65	18
	69	22
	77	9
	82	18 -1
	171	20
24104-062044	54	26
	65	19
	138	16
	146	15 -1
24104-062054	18	25
	24	22
	30	10
	55	15
	138	17
	144	30
	163	11
24104-062064	8	9
	27	14
	61	14

Parts No.	Fig. No.	Ref. No.
24104-062064	75	9
	80	8
	144	31
	162	18
24104-062074	34	24
	50	20
	141	10
24104-062084	34	25
	138	18
24104-062114	50	21
	60	24
24104-063014	68	28
	170	25
24104-063024	17	14
	18	26
24104-063034	52	21
	55	16
	57	10
	65	20
		21
	146	15
24104-063044	54	27
	74	7
	79	7
	82	19
	144	32
	146	16
24104-063054	144	33
24104-063064	25	8
	51	10
		11
	141	11
24104-063084	50	22
24190-100002	92	9
24190-120001	34	26
24311-000100	114	12
24311-000110	4	25
24311-000140	34	27
	50	28
	92	10
	114	13
24311-000160	84	13
	110	10
	160	30
24311-000180	36	11
24311-000210	84	14
24311-000224	36	22
24311-000360	36	12
		23
24315-000140	94	27

Parts No.	Fig. No.	Ref. No.
24315-000140	111	11
	112	16
24315-000180	94	28
	111	26
	112	11 A
		18
24315-000240	111	24
	112	22
24321-000350	114	14
24321-000600	94	51
24321-000650	94	29
	97	13
24321-000700	84	15
	110	11
24321-000950	50	23
	86	9
24321-001700	144	34
24325-000600	115	15
24341-000125	85	11
24341-000400	91	13
24341-000550	94	30
24341-000560	94	56
24351-020280	84	16
24421-254208	19	33
	160	31
24421-305208	19	34
	160	32
24421-457212	50	24
	97	14
24421-609011	50	25
24423-254208	88	3
24430-204206	17	32
	18	27
24550-012150	18	28
24550-015150	106	32
	152	9
24550-015200	139	31
24550-016120	114	15
24550-018100	105	27
		28
24550-018200	34	28
24550-020150	24	23
	108	7
	109	25
		26
	142	15
	152	10
24550-020200	52	22
	72	14
24550-020250	15	18

Parts No. Index

Parts No.	Fig. No.	Ref. No.
24550-020250	55	17
	57	11
24550-025300	54	28
24550-045300	115	12
24550-070300	34	29
24761-060000	115	19
	123	14
		29
	124	12
	125	12
	128	14
	142	16
		17
	144	41
25123-004602	53	14
	159	32
25123-005802	72	15
	159	33
25123-006004	139	4 -1
	159	21 -1
25210-600621	58	4
26013-060162	106	33
	116	9
	131	39
26013-060252	132	13
26013-080162	24	24
	55	18 -1
	68	29
	71	3
	110	12
	144	35
	159	34
	170	26
26013-080202	5	24
		25
	6	20
		21
		22
		23
		24
		25
	7	25
	12	17
	15	19 -1
	23	12
	49	4
	52	23
		24
	55	18
		19

Parts No.	Fig. No.	Ref. No.
26013-080202	57	12
	65	22
	72	16
	83	10
	100	13
	132	14
	135	29
	142	18
	144	36
		37
	146	17
26013-080252	17	24
	21	4
	22	4
	48	3
		3 -1
	50	26
	64	17
	74	8
	79	8
	83	11
		12
	104	19
	144	42
26013-080302	85	14
	86	10
26013-080352	50	27
26013-080402	15	19
	84	17
26013-080552	84	18
26013-080702	114	19
26013-100202	3	9
	83	13
	107	8
	145	8
26013-100252	8	10
	17	34
	25	9
		10
	51	12
	72	17
	75	16
	97	15
	114	20
	130	14
	142	19
	144	43
	145	9
26013-100302	3	10
	30	11

Parts No.	Fig. No.	Ref. No.
26013-100302	97	16
	146	18
	163	12
26013-100352	15	20
26013-100502	19	35
	160	40
26013-120302	2	2
	25	11
		12
	51	13
	144	44
26013-120352	50	29
26013-120402	60	25
	84	19
26014-060122	64	18
	116	10
26014-060162	4	39
	7	26
		27
		28
	34	30
		31
		32
	81	10
	100	14
		15
		16
		17
		27
	101	20
		21
		22
		23
	102	8
		8 -1
	112	23
	120	3
	131	40
		41
		42
	142	20
	146	19
	148	22
		23
	153	3
		4
	167	20
		21
		22
26014-060202	27	15

Parts No.	Fig. No.	Ref. No.
26014-060202	101	24
	136	4
26014-060252	135	30
26014-080162	6	26
	15	22
	16	10
	21	5
	29	2
	33	8
	38	14
		15
		16
	39	3
		4
	46	10
		11
	58	5
	60	12
	61	15
	63	3
		4
		7
	68	30
		31
		32
		33
	69	23
		24
	73	6
		7
	75	17
		18
	78	2
	80	15
		16
		17
	99	21
		22
		23
	100	18
	101	25
	105	29
	113	77
		78
	123	38
	131	43
		44
	132	15
	135	31
		32

Parts No. Index

Parts No.	Fig. No.	Ref. No.
26014-080162	139	32
	144	38
		39
		45
	145	10
	146	17 -1
	148	24
		25
		26
		27
		28
		29
	152	11
	167	25
	168	5
	169	11
		12
	170	27
		28
		29
		30
	171	21
		22
26014-080202	4	40
	5	26 -1
		29
	7	29
		30
	9	6
		7
	10	6
		7
	11	6
		11
	12	18
		19
	13	3 -1
	16	7
	30	12
	33	12
	35	10
	38	17
	40	13
		14
		15
	41	4
		5
		5 -1
	43	6
	44	5

Parts No.	Fig. No.	Ref. No.
26014-080202	46	12
		13
	47	5
		5 -1
		7
	48	7
	49	5
	55	20
	56	7
		8
	60	26
	61	16
	62	2
	63	8
	69	25
	70	5
	75	19
	77	10
	80	18
		19
		20
	100	19
		20
		21
		22
		23
		24
		25
	101	26
	102	9
	113	79
	115	20
		21
	116	11
	119	12
		13
	130	15
		16
		17
	132	16
	133	16
		17
	134	11
		12
	136	5
	138	19
	139	33
		34
	141	13
	142	21

Parts No.	Fig. No.	Ref. No.
26014-080202	142	22
	144	46
	148	1 -1
		30
	152	12
	159	35
	163	13
	166	8
	169	13
	171	23
	172	5
26014-080252	5	26
	18	29
	30	13
	54	33
	75	20
		21
	80	21
	99	24
	101	27
	112	24
	141	14
	163	14
26014-080302	4	41
	19	36
	110	13 -1
	138	20
	141	15
	148	31
	160	33
26014-080352	34	33
26014-080502	19	37
	160	34
26014-080552	13	3
	144	47
26014-080602	59	9
26014-081002	4	42
26014-100202	3	11
	49	6
	60	13
	61	17
	64	19
	112	25
	134	13
26014-100252	20	5
		6
	22	5
	42	4
	43	7
	60	14

Parts No.	Fig. No.	Ref. No.
26014-100252	61	18
	130	18
		19
	142	23
		24
		25
		26
		27
	147	5
	149	9
		10
26014-100302	19	38
	25	13
	50	30
	141	16
	160	41
26014-100352	60	15
	122	4
26014-100402	145	11
26014-100452	14	11
26014-120302	37	4
26016-060252	114	16
26016-060402	114	17
26022-050122	104	20
26022-060122	148	32
26022-060162	131	45
26023-050122	134	14
26106-080162	4	43
26106-080202	6	27
		28
26116-080162	8	14
	31	8
	65	23
	84	20
	97	17
	164	9
26116-080202	152	13
26116-080252	81	11
26116-080304	69	26
	171	24
26116-080404	110	13
26116-080452	119	14
26116-080704	5	27
26116-080904	4	44
26116-080952	135	33
26116-100504	25	15 -1
		16 -1
26116-100552	106	34
26116-100602	95	6
26116-100654	25	14

Parts No. Index

Parts No.	Fig. No.	Ref. No.
26116-100654	25	15
		16
26116-101002	83	14
26116-101052	84	21
26116-120202	141	17
26116-120552	59	10
26116-120602	18	30
26116-120702	28	12
26116-120802	121	5
26116-121702	122	5
26116-121802	96	4
26116-122002	96	5
26117-050252	142	28
26156-100252	128	15
		17
26156-140302	37	5
	55	21
	56	9
	61	19
26156-140352	12	20
	124	16
	125	16
26156-160352	33	9
26156-160452	35	11
26156-160552	126	4
26216-080202	111	36
26306-080002	1	9 -1
	6	29
	111	37
26306-100002	6	30
		31
26346-080002	31	9
	68	34
		35
		36
		37
	164	10
	170	31
		32
		33
26346-100002	93	7
	95	7
	133	18
26347-080002	119	15
26367-050002	148	33
26367-060002	16	8 -1
	26	2
	100	26
	130	20
		21

Parts No.	Fig. No.	Ref. No.
26367-060002	135	34
	136	6
	142	29
	146	21 -1
	167	23
26367-080002	20	7
		8
	33	10
	38	18
	39	5
	40	16
		17
	45	3
	61	20
		21
	63	9
	68	38
	70	6
	77	11 -1
		12 -1
		13 -1
	81	12
	101	28
		29
		30
	103	3
	133	19
	134	15
		16
	142	30
	148	34
	166	9
	168	8
		10
	169	14
	170	34
	172	6
26367-100002	20	9
		10
	36	35
	146	20
26367-120002	3	12 -1
	18	31
	23	13
	122	6 -1
26450-050122	94	52
26450-060162	60	16
	131	46
26450-080352	94	53
26450-100402	94	54

Parts No.	Fig. No.	Ref. No.
26450-100452	94	55
26476-060142	84	22
		23
	92	11
26487-080202	20	11
		12
	168	11
	170	35
26487-100253	20	13
		14
26487-100353	17	25
26487-100403	17	26
26587-030162	139	35
26587-030202	106	35
	109	27
26587-060122	131	47
26636-060002	16	8
26677-160002	123	15
		30
26716-080002	85	12
26716-120002	96	6
26717-060002	68	39
	81	13
	114	21
	146	21
26717-080002	1	9
	4	45
	5	28
	8	15
	9	8
	10	8
	13	4
	30	14
	32	5
	40	18
	42	5
	53	15
	60	27
	64	20
	65	24
		25
	66	4
	67	5
	68	40
	69	27
	72	18
	73	8
	75	22
	77	11
		12

Parts No.	Fig. No.	Ref. No.
26717-080002	77	13
	80	22
	81	14
	104	21
	105	30
		31
	107	9
		10
	117	3
	134	17
	139	36
	152	14
		15
	159	36
	163	15
	165	6
	168	6
	171	25
26717-100002	15	21
	17	27
	25	17
		18
		19
	28	13
	52	25
	54	29
	55	22
	59	11
	82	20
		21
	106	36
		37
		38
26717-120002	3	12
	18	32
		33
	24	25
	109	28
		29
	122	6
26717-140002	17	33
	18	34
26737-120002	19	39
	52	26
		27
	53	16
	65	26
	139	37
	160	42
26737-140002	82	22

Parts No. Index

Parts No.	Fig. No.	Ref. No.
26737-160002	8	11
	18	35
	23	14
	28	14
	34	34
	54	30
	82	23
	106	39
	123	16
		31
26737-200002	51	14
	54	31
26737-240002	127	7
26757-080002	69	28
	133	8
	171	26
26757-100002	27	16
	162	19
26757-140002	145	12
26776-100002	114	5
26777-120002	19	40
	160	43
26777-160002	8	12
	18	36
	23	15
	24	26
	28	15
	34	35
	36	13
		24
	106	40
26911-120122	34	36
27260-250000	84	24
27260-420002	87	12
27260-620000	94	31
28110-100120	158	8
28110-120140	158	9
28110-170190	158	10
28110-220240	158	11
28120-002000	158	12
28170-001500	158	13
28210-000140	158	14
29311-124000	112	26
29311-254000	38	19
		19 -1
	169	15
41802-310040	155	22
7E6150-83301	120	2
7E6B00-52810	95	1
7E6B01-92300	141	1

Parts No.	Fig. No.	Ref. No.
7E6B30-45100-1	75	2
	80	1
7E6B30-55120	89	2
7E6B30-55300	89	7
7E6B30-98100	158	1
7E6C40-52550	86	1
7E6C40-73500	128	3
7E6C41-91400	138	2
7E6C42-92600	144	3
7E6C43-53150	97	1
7E6C45-52600	94	1
7E6C45-73000	123	2
7E6C45-73010	123	17
7E6C80-13400	11	1
7E6C80-13450	11	2
7E6C80-13520	11	7
7E6C80-17400	160	1
7E6C80-28200	167	1
7E6C80-35000	50	1
7E6C80-45000	74	2
7E6C80-46100	79	4
7E6C80-46500	81	2
7E6D10-26000	162	1
7E6D10-27200	163	1
7E6D10-27600	164	1
7E6D10-27700	165	1
7E6D10-28010	166	1
7E9062-54300	98	1

Parts No.	Fig. No.	Ref. No.

Parts No.	Fig. No.	Ref. No.