Your best partner, Enertech Co., Ltd.

Cast Resin Transformers

www.enerkeeper.com

Accessories

❶ Lifting lug

❷ LV terminal

❸ HV termenal

❹ Tap terminal link

❺ Grounding terminal

❻ Anti-vibration pad

(Bi-directional wheel)

(Cooling fan)

(Temperature)

(Enclosure)

Enertech Technology

High voltage winding

Enertech standard coil of the high and low voltage windings are of alumimun foil & strip. Because foil windings combine a simple winding technique with a high degree of electrical safety. The insulation is subjected to less electrical stree than in other types of windings. The thermal expansion coefficients of aluminum and cast resin are so similar that thermal stresses due to load changes are kept to a minimum. The high voltage windings are potted with epoxy resin under vacuum.

The interturn voltage can add up to twice the interlayer voltage, while in a foil winding it never exceeds the plain voltage per turn because each layer consists of only one winding turn. The result : High power frequency and impulse voltage withstand capability.

Low voltage winding

The width of the alumimum strip is equal to the length of the coil. This considerably reduces axial short circuit force in the transformer. The conductor strip and the insulation material are bonded together by heating.

Iron core

The iron core is made of the highest quality cold-rolled, grain-oriented magnetic sheets. The most practical transfer of the magnetic flux from legs to yoke is achieved by overlapping the opposing joints in several steps on neighbouring sheets. The cutting angles are 45°. This reduces no-load losses and no-load currents as well as noise. The resin coating also protects the core against corrosion.

Characteristice

Fire resistant

The cast coil with epoxy resin with non-flammable characteristics has self-fire extinguishing performance, to be from a fire from electric sparks.

Superior insulation capability

The cast coil with epoxy resin has an enhanced dielectric strength and doesn't suffer from the deterioration property due to humidity and the aging effects of insulating materials, even after a long term without maintenance.

Higher short circuit strength

The cast coil with epoxy resin with the electrical and mechanical strength is manufactured in a robust structure against an electro-mechanical force occurring during short circuit, external impacts, and abnormal vibrations.

High overload capability

The cast coil with epoxy resin has a high thermal time constant factor, therefore it can endure much higher overloads for a short time.

Low Loss & Low Noise

low-loss and low-noise are embodies througth the optimal compact design using silicon steel of low-loss and good insulating materials.

Maintenance free

The cast coil with epoxy resin doesn't suffer from the deterioration of an insulating property due to humidity and moisture. Therfore it is easy to inspect and maintain a transformer including the coil.

Environmentally safe

Comparing to an oil-immersed transformer, it is free from an environmental pollution due to oil spill.

Specification

	Indoors				
Primary voltage(kV)	22.9			6.6 or 3.3	
Primary tab voltage(kV)	F23.9-R22.9-21.9-20.9-19.9			F6.9-R6.6-6.3-6.0-5.7 F3.45-R3.3-3.15-3.0-2.85	
Secondary rated voltage(kV)	6.6 or 3.3	0.38 - 0.22	0.22 - 0.11	0.38 - 0.22	0.22 - 0.11
Phase	3상	3상	single	3상	single
Angular displasement	Dd0	Dyn11	3 wire	Dyn11	3 wire
			50		50
			75		75
		100	100	100	100
		200	200	200	200
		300	300	300	300
		400	400	400	400
	500	500	500	500	500
	600	600	600	600	600
	750	750	750	750	750
	1000	1000	1000	1000	1000
	1500	1500		1500	
	2000	2000		2000	
	2500	2500		2500	
	3000	3000		3000	
	4000				
	5000				
	7500				
	10000				
	12500				
Frequency	60Hz				
Insulate type	B종, F종				
Winding temperature rise	80℃ / 100℃				
Standard insulation level	system voltage	24kV	7.2kV	3.6kV	0.6kV 이하
	withstand voltage	50kV	20kV	10kV	3kV
	Inpulse voltage	95kV	60kV	40kV	-
standarge	KSC 4311, IEC 60726				

Dimensions

3Ø 22.9kV / 380-220V

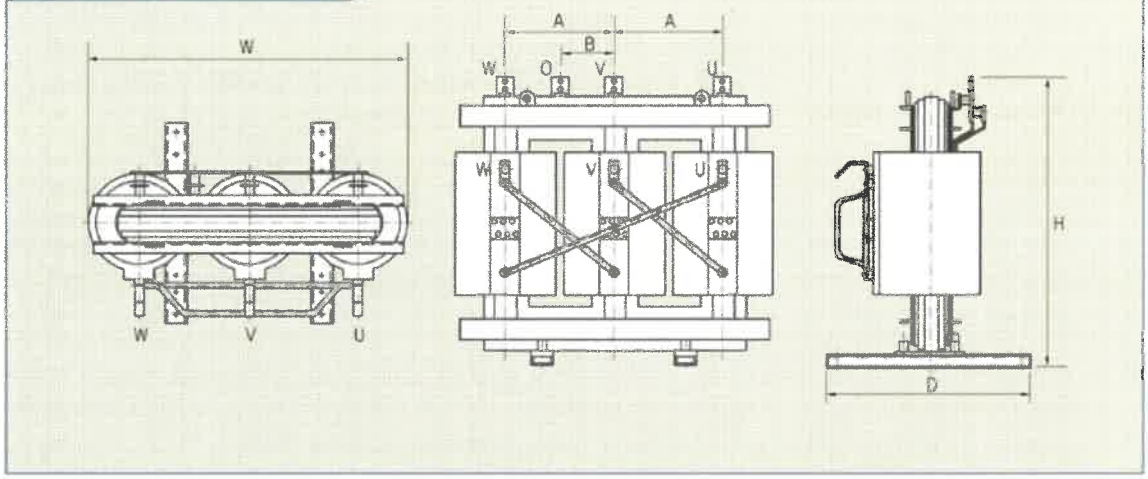

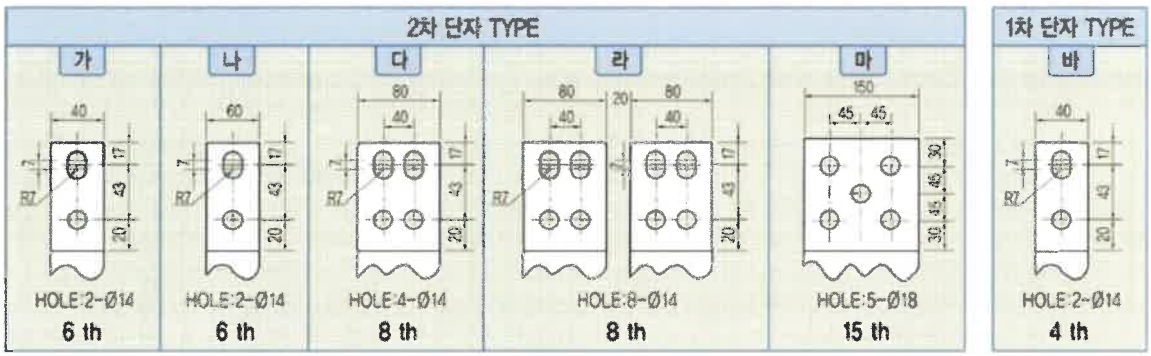

Capacity (kVA)	% Imp.	Efficiency (%)	voltage regulation (%)	No-load current (%)	(db)	Dimension(mm)			Weight (kg)
						W	D	H	
100	6.0	98.8	2.2	7.0	64	1,400	800	1,500	1,200
200	6.0	99.0	2.0	5.5	65	1,400	800	1,650	1,500
300	6.0	99.1	1.7	4.5	66	1,430	800	1,650	1,600
400	6.0	99.2	1.6	4.0	67	1,520	800	1,650	1,900
500	6.0	99.2	1.5	3.5	68	1,500	800	1,750	2,000
600	6.5	99.3	1.4	3.0	68	1,650	800	1,750	2,500
750	6.5	99.3	1.4	3.0	70	1,650	1,000	1,750	2,700
1000	7.0	99.4	1.3	3.0	70	1,810	1,000	1,850	3,500
1250	7.0	99.4	1.3	2.5	72	1,950	1,000	1,950	4,300
1500	7.0	99.5	1.2	2.5	72	2,040	1,000	2,120	5,200
2000	8.0	99.5	1.1	2.0	74	2,145	1,100	2,120	5,900
2500	8.0	99.5	1.0	2.0	74	2,250	1,100	2,150	6,300
3000	8.5	99.5	1.0	2.0	76	2,350	1,100	2,210	6,900

* 상기치수는 예고없이 변경될 수 있습니다. (The above are subject to change without notice)

Dimensions

3Ø 6.6kV / 380-220V

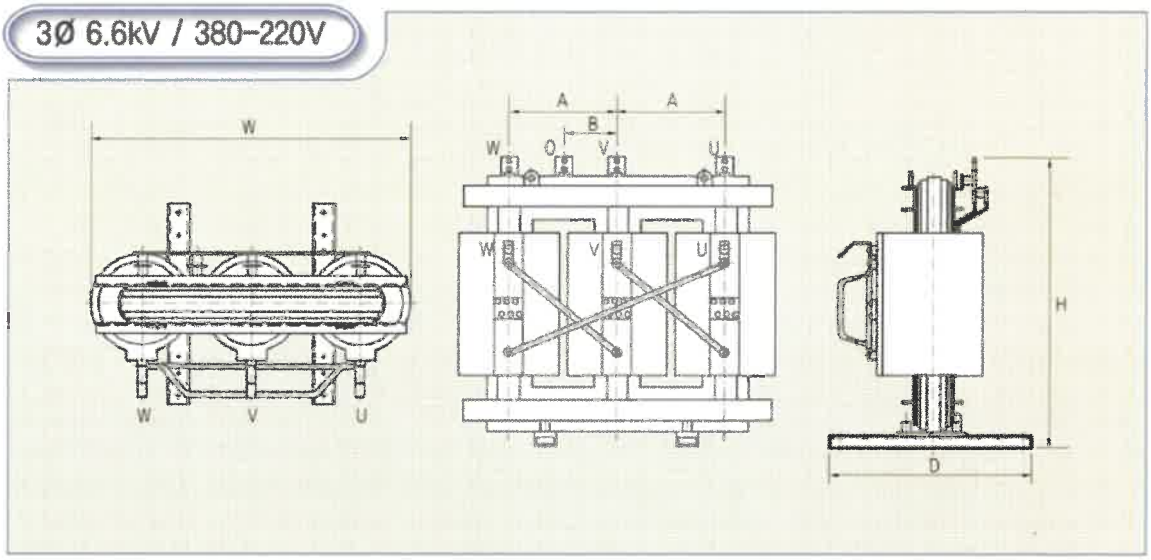

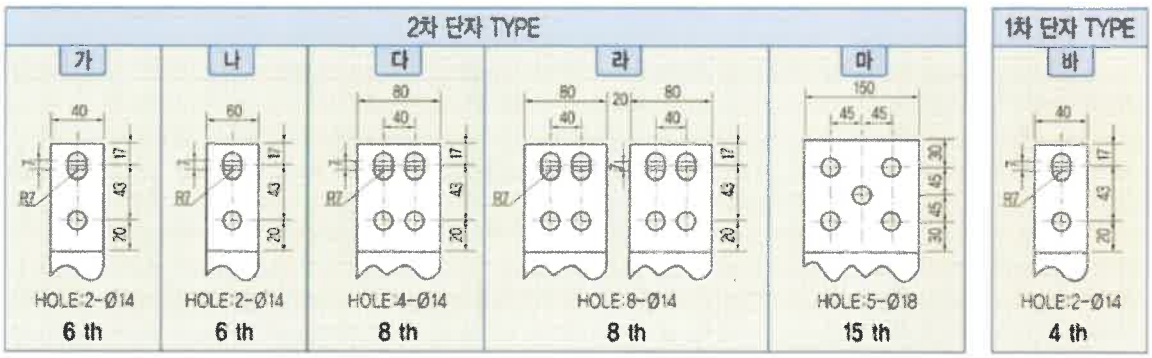

Capacity (kVA)	% Imp.	Efficiency (%)	voltage regulation (%)	No-load current (%)	(db)	Dimension(mm)			Weight (kg)
						W	D	H	
100	5.0	98.9	2.1	6.5	64	1,100	800	1,350	1,100
200	6.0	99.0	1.9	4.5	65	1,150	800	1,400	1,400
300	6.0	99.1	1.7	4.0	66	1,200	800	1,400	1,500
400	6.0	99.2	1.6	4.0	67	1,250	800	1,500	1,750
500	6.0	99.3	1.5	3.0	68	1,250	800	1,500	1,950
600	6.5	99.3	1.5	3.0	68	1,350	800	1,600	2,150
750	6.5	99.3	1.4	2.5	70	1,400	1,000	1,600	2,300
1000	7.0	99.4	1.3	2.5	70	1,550	1,000	1,750	3,200
1250	7.0	99.5	1.2	2.0	70	1,700	1,000	1,750	3,900
1500	7.0	99.5	1.2	2.0	72	1,800	1,000	1,850	4,500
2000	8.0	99.5	1.1	2.0	74	1,850	1,100	1,850	5,100
2500	8.0	99.5	1.1	2.0	74	1,900	1,100	2,000	5,800
3000	8.5	99.5	1.1	2.0	74	2,000	1,100	2,000	6,200

* 상기사항은 예고없이 변경될 수 있습니다. (The above are subject to change without notice)

Dimensions

3Ø 3.3kV / 380-220V

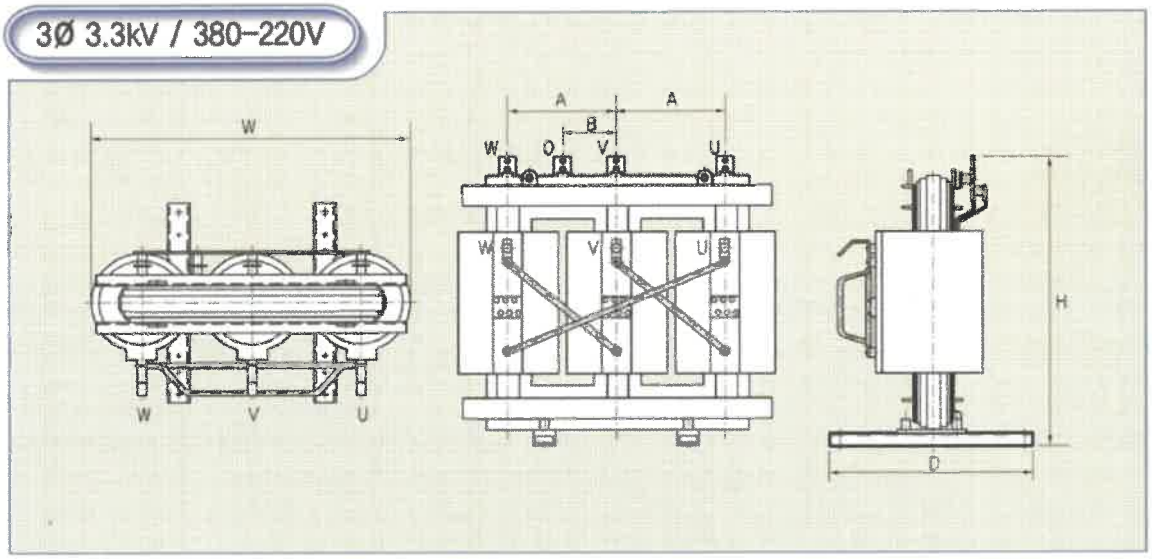

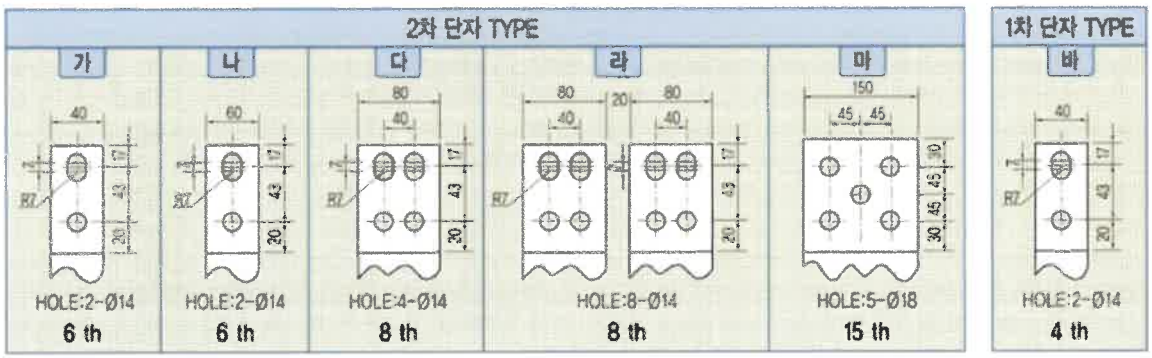

Capacity (kVA)	% Imp.	Efficiency (%)	voltage regulation (%)	No-load current (%)	(db)	Dimension(mm)			Weight (kg)
						W	D	H	
100	5.0	98.9	2.1	6.5	64	1,100	800	1,350	1,100
200	6.0	99.0	1.9	4.5	65	1,150	800	1,400	1,400
300	6.0	99.1	1.7	4.0	66	1,200	800	1,400	1,500
400	6.0	99.2	1.6	4.0	67	1,250	800	1,500	1,750
500	6.0	99.3	1.5	3.0	68	1,250	800	1,500	1,950
600	6.5	99.3	1.5	3.0	68	1,350	800	1,600	2,150
750	6.5	99.3	1.4	2.5	70	1,400	1,000	1,600	2,300
1000	7.0	99.4	1.3	2.5	70	1,550	1,000	1,750	3,200
1250	7.0	99.5	1.2	2.0	70	1,700	1,000	1,750	3,900
1500	7.0	99.5	1.2	2.0	72	1,800	1,000	1,850	4,500
2000	8.0	99.5	1.1	2.0	74	1,850	1,100	1,850	5,100
2500	8.0	99.5	1.1	2.0	74	1,900	1,100	2,000	5,800
3000	8.5	99.5	1.1	2.0	74	2,000	1,100	2,000	6,200

※ 상기사항은 예고없이 변경될 수 있습니다. (The above are subject to change without notice)

Dimensions

3Ø 22.9kV / H.V

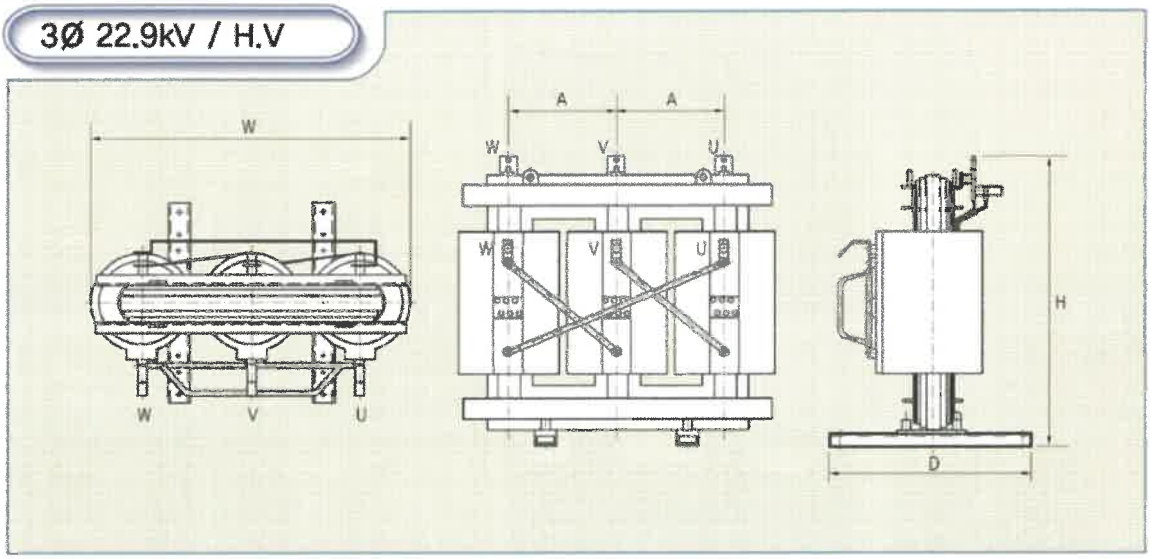

1차 단자 TYPE

바

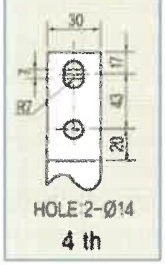

4 th

2차 단자 TYPE

가

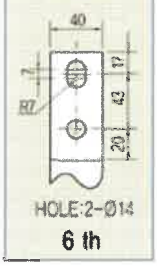

6 th

Capacity (kVA)	% Imp.	Efficiency (%)	voltage regulation (%)	No-load current (%)	(db)	Dimension(mm)			Weight (kg)
						W	D	H	
100	6.0	98.8	2.2	7.0	64	1,500	800	1,600	1,500
200	6.0	99.0	2.0	5.5	65	1,550	800	1,650	1,600
300	6.0	99.0	1.7	4.5	66	1,600	800	1,650	1,700
400	6.0	99.1	1.6	4.0	67	1,600	800	1,650	2,000
500	6.0	99.2	1.5	3.5	68	1,700	800	1,750	2,100
600	6.5	99.3	1.4	3.0	68	1,750	800	1,750	2,600
750	6.5	99.3	1.4	3.0	70	1,750	1,000	1,750	2,800
1000	7.0	99.4	1.3	3.0	70	1,910	1,000	1,850	3,600
1250	7.0	99.4	1.3	2.5	72	2,050	1,000	1,950	4,500
1500	7.0	99.5	1.2	2.5	72	2,150	1,000	2,120	5,400
2000	8.0	99.5	1.1	2.0	74	2,250	1,100	2,120	6,100
2500	8.0	99.5	1.0	2.0	74	2,350	1,100	2,150	6,500
3000	8.5	99.5	1.0	2.0	76	2,450	1,100	2,210	7,100

※ 상기치수는 예고없이 변경될 수 있습니다. (The above are subject to change without notice)

Manufacturing processing

Winding

Coil

Cast Resin

Curling

Molding

Assembly

Finished Product

Final Testing

• ROUTINE TESTS

Measurement of Winding resistsnce
Measurement of Voltage ratio
Check of Vector relationship
Measurement of impedance voltage and load loss
Measurement of no load loss and current
Separate-source voltage withstand test
Induced overvoltage withstand test
Checking of the dimensions

• TYPE TESTS

Lightning impulse test
Temperature rise test

• SPECIAL TESTS

Partial discharge measurement
Measurement of sound level

Mold type PAD Mounted transformer

Application

A pad-mounted transformer is specifically designed for applications of underground distribution loads; schools, shopping center, country club, or subway. For radial or loop feed application, both live or dead front construction is available. It useds not insulation oil, it is on cast resin transformer.

Rating

- Applicable standard : ANSI
- Capacity : 50 through 2000kva
- Primary voltages : 3300V through 38kV
- BIL ratings : 60kV to 200kV

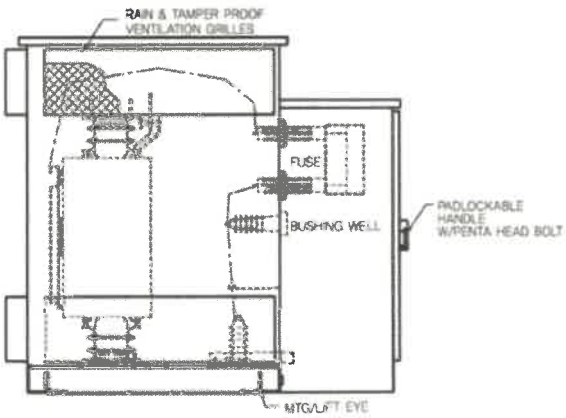

LEFT SIDE VIEW

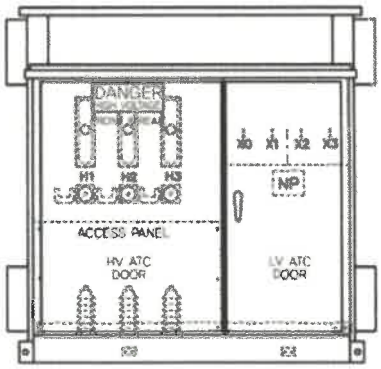

FRONT VIVE

Marine and offshore application

Enertech is one of the leading technology company in Korea, the transformers and Reactors for Marine and offshore application with Dry and Cast Resin type which is designed to manage and protect electrical installations ensure safty and provide power supply reliability and continuity, and exellent resistant to vibration and rolling and can withstand corrosion resulting from salt water.

Qualifications and authorization of ISO 9001 :2000 and ISO14001.

Enertech transformers and reactors for Marine have been and can be certified is accordance with the customer requirements by the ship classification society such as Lioyds, BV, DNV, ABS, GL, RINA, KR, etcs.

Enertech is one of I. S. E. S. members(the International Ship Electrical and engineering Service association) which the the object is to unite a worldwide network of members to provide quality electrical, electronic and specialised mechnical services to the marine industry

Cast-Resin transformers

- Application : Marine
- Standard : According to ship classification by DNV, BV, ABS, KR, LR, RINA, etc
- Capacity : up to 15MVA
- Max. Voltage : up to 33kV
- Impulse level : up to 200kV
- Insulation level : Class B & F & H
- Conductor : AL. & CU.

Dry type transformer

- Application : Marine
- Standard : According to ship classification by DNV, BV, ABS, KR, LR, RINA, etc
- Capacity : up to 5000kVA
- Max. Voltage : up to 11kV
- Impulse level : up to 95kV
- Insulation level : Class B & F & H
- Conductor : AL. & CU.

Your best partner. Enertech Co., Ltd.

Oil-Filled Transformers

www.enerkeeper.com

Power Transformers

We menulacture a range of either oil or synthetic liquid filled transformers up to 50MVA at voltage 69KV.
Tappings are provided on the H.V. winding, controlled either by means of an off-circuit tap changer, or on-load tap changer.

Product range

- Single or Three phase transformers
- HVDC Converter transformers
- Phase-shifting transformers
- Auto transformers
- Substation transformers with cable boxes
- etc.

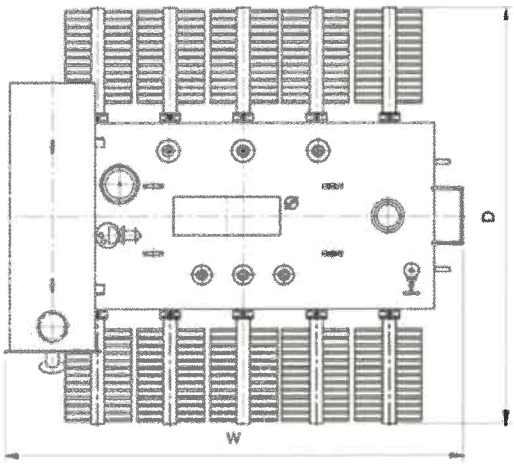

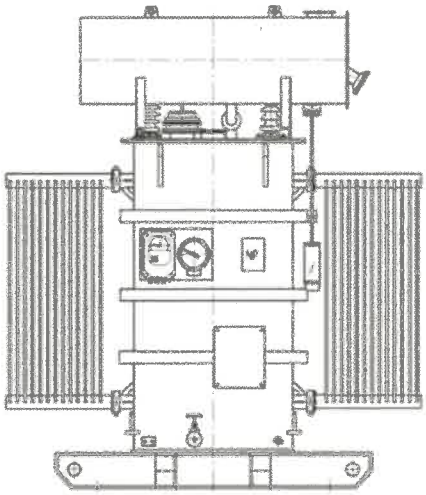

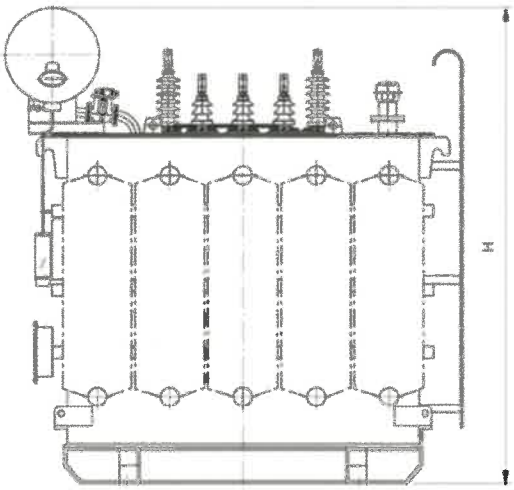

Dimension & Weight

Voltage		Capacity (kVA)	Dimension(mm)			Oil (ℓ)	Weight (Kg)
Primary	Secondary		W	D	H		
22,9 kV	6,6/3,3 kV	1500	1800	1750	1800	1250	4500
		2000	1900	1800	1850	1350	5100
		3000	2200	2000	1600	1750	7000
		5000	1650	1500	3200	3000	12000
		7500	2900	1800	3400	4000	14500
		10000	3200	3400	3500	5500	19000
		12000	3300	3600	3600	6200	24000
		15000	3600	3800	3800	7500	36000
		20000	3600	4200	4000	8000	30000
		30000	4000	4600	4200	10000	40000
		40000	4500	4800	4400	11500	54000
		50000	4800	4900	4500	12000	65000

Distribution Transformers

Enertech distributions range upto 10MVA with primary voltage upto 34.5kV has been manufactured for over 20years and are used in mainly industrial applications and special purpose applications to fulfill the customers requirements.

The windings of the transformers are made of high grade electrolytic copper or aluminum. The high voltage windings are wound either with round, enamel insulated, or shaped, paper insulated wire. The low voltage windings are wound with shaped, paper insulated wire or foil. The winding construction is characterized by high dielectric strength with high resistance, to atmospheric surges and to the effects of short-circuits.

Open Breather type transformer

Special transformer

Conservater type transformer

sealed type transformer

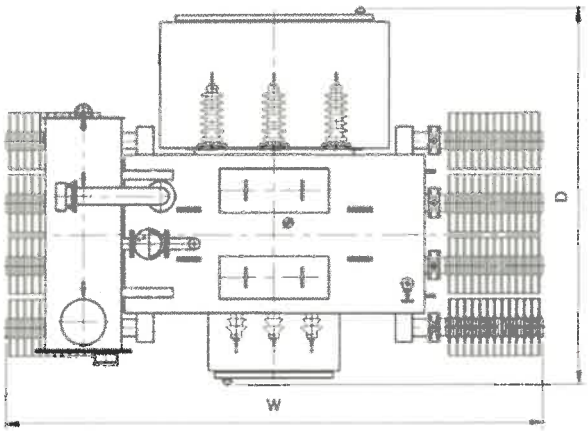

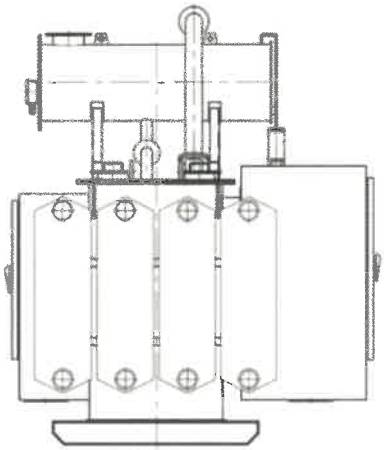

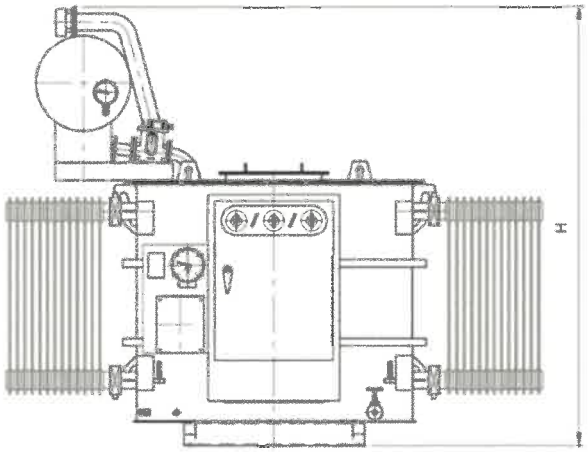

Dimension & Weight

Three phase 22900V-L.V

Capacity (kVA)	Dimension(mm)			Oil (ℓ)	Weight (Kg)
	W	D	H		
100	1200	1550	1150	250	700
200	1250	1580	1200	300	950
300	1400	1600	1250	350	1100
400	1650	1750	1350	410	1500
500	1850	1800	1400	520	2000
600	1900	1800	1400	580	2100
750	2100	1850	1450	650	2300
1000	2500	2000	1500	870	3200
1500	2700	2100	1600	1150	3500
2000	2850	2150	2500	1580	5550
2500	3100	2250	2600	1800	7000

Three phase 22900V-6600/3300V

Capacity (kVA)	Dimension(mm)			Oil (ℓ)	Weight (Kg)
	W	D	H		
300	1600	1900	1200	330	1500
500	2000	1950	1400	550	2050
750	2100	2000	1500	750	2800
1000	2300	2050	1650	900	3400
1500	2600	2100	2300	1400	4950
2000	2750	2150	2500	1450	5800
2500	2900	2200	2600	1500	6300
3000	3050	2250	2650	1550	6550
4000	3200	2300	2900	1700	7000
5000	3700	2300	3000	2300	9800
6000	4100	2400	3100	2460	11200

High efficiency Transformers

Product range

- Capacity : Upto 3000kVA
- Frequency : 60Hz
- High Voltage : 22900V
- Low Voltage : 380y220V
- Tap Voltage : 23.9/22.9/21.9/20.9/19.9kV

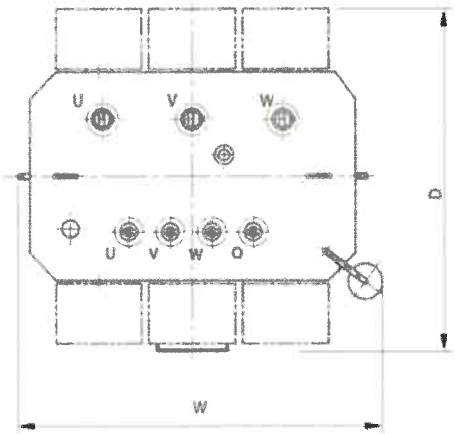

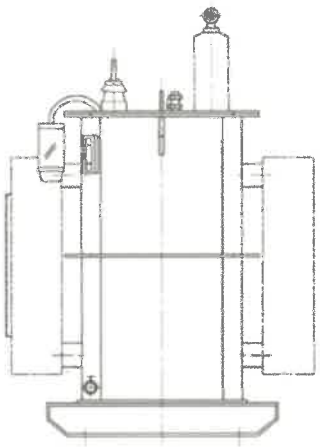

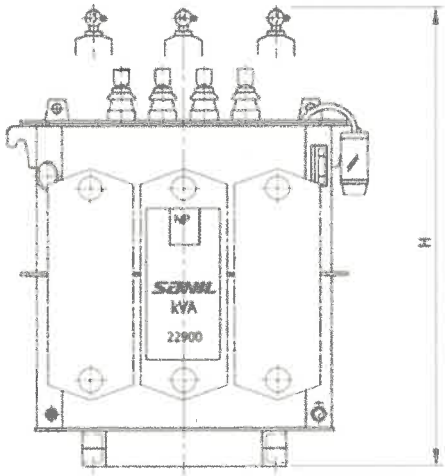

Characteristic & Dimension

Top-Bushing Type [Three Phase 22900V / 380-220V]

Capacity (kVA)	Load factor		(dB)	Dimensions			Oil (ℓ)	TOTAL WEIGH(Kg)
	Standard efficiency	Lowest efficiency		W (㎜)	D (㎜)	H (㎜)		
100	99.0	98.0	53	1,000	700	1,300	200	650
150	99.0	98.1	53	1,000	800	1,350	210	800
200	99.0	98.2	53	1,100	940	1,350	255	1,000
300	99.1	98.4	53	1,100	1,000	1,400	290	1,200
400	99.1	98.4	54	1,100	1,150	1,400	320	1,400
500	99.1	98.5	55	1,200	1,200	1,450	370	1,600
600	99.2	98.5	55	1,200	1,350	1,450	400	1,800
750	99.2	98.6	56	1,250	1,500	1,500	490	2,150
1000	99.3	98.7	56	1,250	1,700	1,500	500	2,500
1250	99.3	98.8	57	1,450	1,700	1,850	900	3,500
1500	99.3	98.8	57	1,450	1,800	1,950	950	4,000
2000	99.3	98.9	57	2,000	2,000	2,250	1,500	5,500
2500	99.4	99.0	58	2,150	2,250	2,600	1,600	6,500
3000	99.4	99.1	59	2,200	2,400	2,700	1,900	7,000

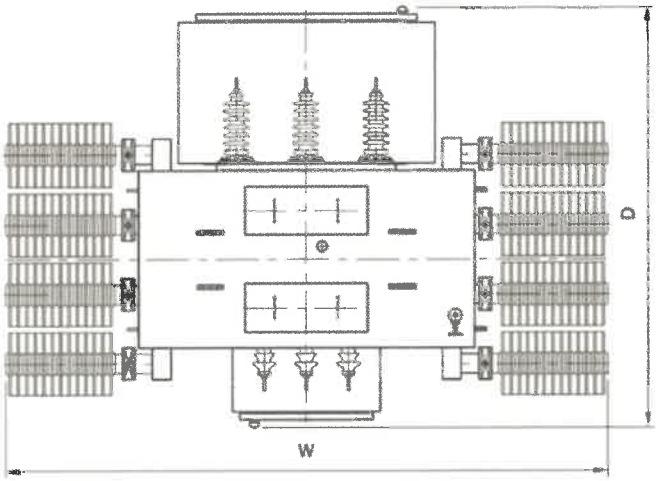

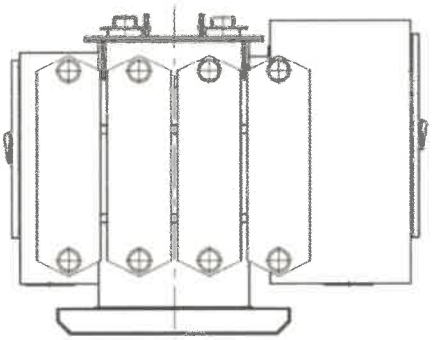

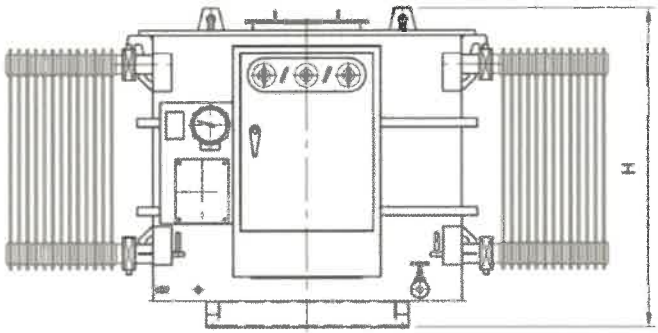

Characteristic & Dimension

Side-Bushing Type [Three Phase 22900V / 380-220V]

Capacity (kVA)	Load factor		(dB)	Dimensions			Oil (ℓ)	TOTAL WEIGH(Kg)
	Standard efficiency	Lowest efficiency		W (㎜)	D (㎜)	H (㎜)		
100	99.0	98.0	53	1,100	1,550	1,150	230	750
150	99.0	98.1	53	1,150	1,550	1,150	250	950
200	99.0	98.2	53	1,150	1,600	1,200	300	1,150
300	99.1	98.4	53	1,300	1,600	1,250	350	1,400
400	99.1	98.4	54	1,500	1,700	1,300	430	1,600
500	99.1	98.5	55	1,650	1,750	1,350	450	1,900
600	99.2	98.5	55	1,750	1,800	1,400	500	2,150
750	99.2	98.6	56	1,900	1,850	1,400	580	2,550
1000	99.3	98.7	56	2,100	1,900	1,450	600	3,000
1250	99.3	98.8	57	2,300	1,950	1,500	1,100	4,000
1500	99.3	98.8	57	2,500	2,000	1,500	1,140	4,700
2000	99.3	98.9	57	2,600	2,050	1,600	1,800	6,400
2500	99.4	99.0	58	2,800	2,100	1,800	1,900	8,000
3000	99.4	99.1	59	3,000	2,200	2,000	2,250	8,500

※ 상기의 Data는 개정안이며, 확정 규격에 따라 변경될 수 있습니다.

Pad Mounted Transformers

Pad-mounted type transformers installed on the ground or sidewalk by underground distribution loads.
For radial or loop feed applications, both live front or dead front construction is availabie.
It is generally fixed on concrete or reinforced concrete ground with proper provisions of enclosure to protect person from any possible injury.
With such special structure for safety, and with fine appearance, this type is recommended to use in the residential quarter, school, park, street or sidewalk, and so on wherever safety and appearance is major consideration.

Accessories

1) Tank
2) Bushing well
3) Bushing insert
4) Stand off insulator
5) Protective cap
6) BAY-O-NET fuse holder
7) Dual sensing fuse
8) ELSP C.L. fuse
9) Tap changer
10) Load break switch
11) Dual voltage switch(option)
12) M.O.V.E arrester(option)
13) Oil leverl indicator
14) Filter valve
15) Thermometer
16) Pressure relief valve
17) Secondary bushing

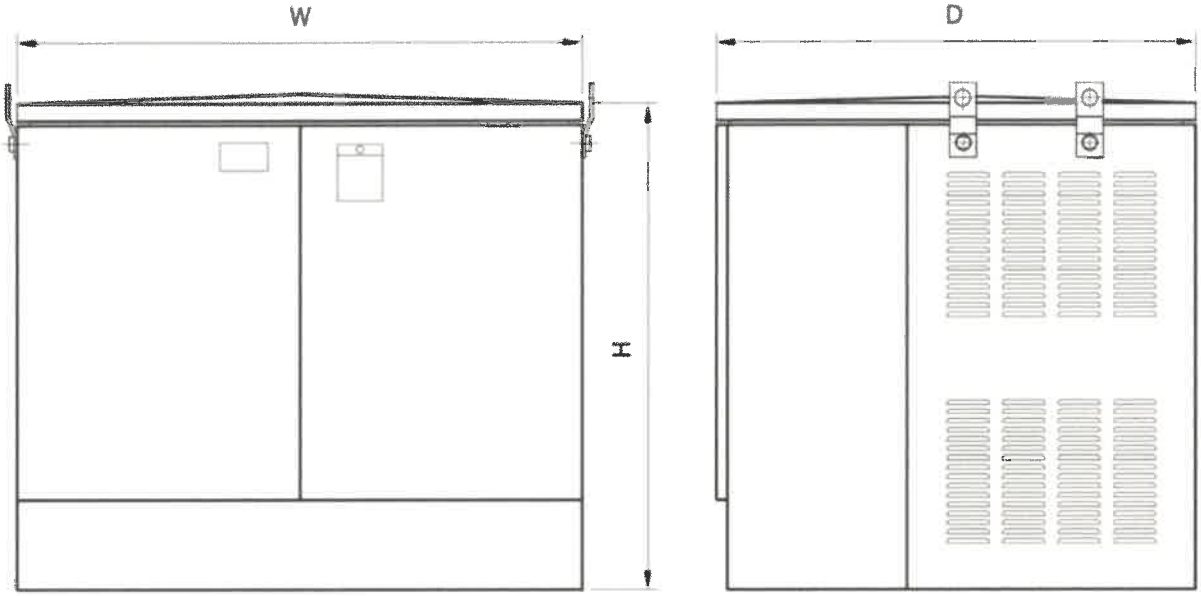

Characteristic & Dimension

Dimension	Capacity (kVA)	BIL 95 kV			BIL 150 kV		
		W (mm)	D (mm)	H (mm)	W (mm)	D (mm)	H (mm)
Dead front Radial feed 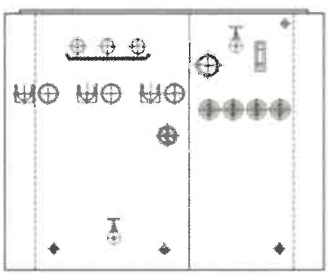	100	1300	1000	1400	1400	1000	1400
	150	1300	1000	1400	1400	1000	1400
	200	1300	1100	1400	1400	1200	1400
	300	1400	1200	1500	1400	1300	1600
	500	1400	1500	1600	1500	1600	1700
	750	1600	1600	1650	1600	1600	1700
	1000	1700	1700	1700	1700	1700	1800
	1500	1800	1850	1750	1900	1850	1900
Dead front Loop feed 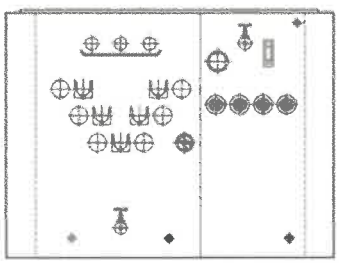	100	1400	1000	1500	1500	1000	1500
	150	1400	1000	1500	1500	1000	1500
	200	1500	1100	1500	1500	1200	1500
	300	1500	1200	1600	1500	1300	1700
	500	1600	1500	1700	1600	1600	1800
	750	1700	1600	1750	1700	1600	1800
	1000	1800	1700	1800	1800	1700	1900
	1500	1900	1850	1850	1900	1850	1950

Pole mounted Transformers

• Single phase
(One Bushing)

• Single phase
(Two Bushing)

Dimension & Weight

Single phase(One Bushing) 22900V Grdy / 13200V-230V

Capacity (kVA)	Characteristics			Dimension(mm)			Oil (ℓ)	Weight (Kg)
	Efficiency (%)	Vtg. Reg. (%)	Exciting current(%)	W	D	H		
10	97.8	2.0	1.2	470	560	1030	40	135
20	98.1	1.7	1.2	510	600	1060	50	175
30	98.3	1.5	1.0	530	620	1080	60	210
50	98.5	1.4	0.8	680	660	1100	80	280
75	98.5	1.4	0.8	740	710	1140	110	360
100	98.6	1.3	0.7	840	730	1150	110	430

Single phase(Two Bushing) 22900V - 230V

Capacity (kVA)	Characteristics			Dimension(mm)			Oil (ℓ)	Weight (Kg)
	Efficiency (%)	Vtg. Reg. (%)	Exciting current(%)	W	D	H		
10	97.0	2.4	3.0	470	560	1030	40	150
20	97.4	2.1	3.0	510	600	1060	50	190
30	97.6	1.9	2.5	530	620	1080	60	230
50	97.9	1.8	2.0	680	660	1100	80	300
75	98.0	1.8	2.0	740	710	1140	110	370
100	98.1	1.7	2.0	840	730	1150	110	450

Manufacturing processing

HV. LV. Windings

Windings

Core Assembly

Drying

Tanking

Core & Coil Assembly

Finished Product

Final Testing

VPI Transformers

It is Newly developed transformer which features highly safe and effective functions adopting the state of the art technologies such as VPI (Vacuum Pressure Impregnation) treatment together with high temperature insulation material NOMEX that is available up to 220°C. It also has excellent electrical & mechanical characteristics that are very safe and economical to use.

High stability

- Flame retardant(using premium flame-retardant materials)
- Minimization of losses of human/property by fire.

High reliability

- Excellent over-load capacity
- No crack
- Minimization of occurrence of partial discharge
- Excellent short circuit strength

Environment friendly

- No used insulation oil.
- Materials like conductors can be recycled easily at lower cost.

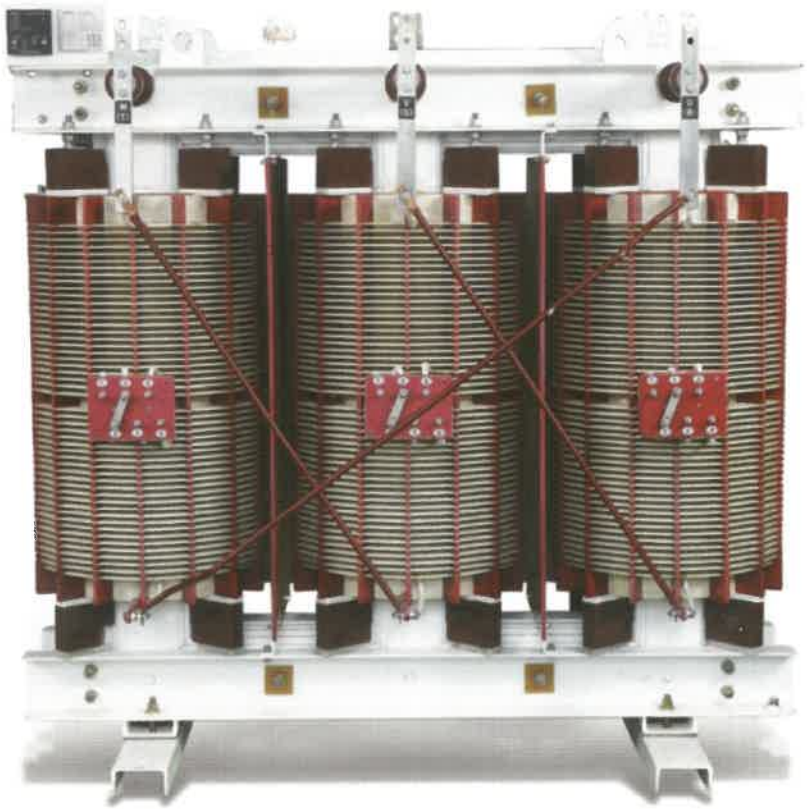

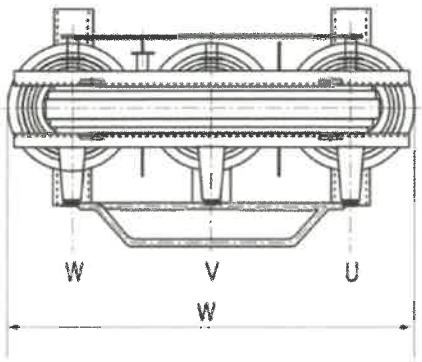

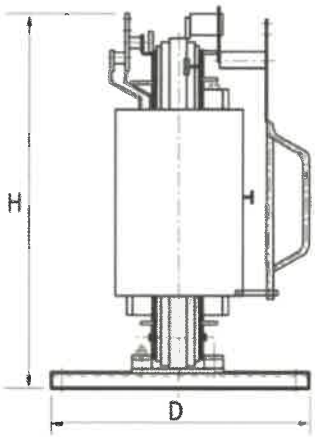

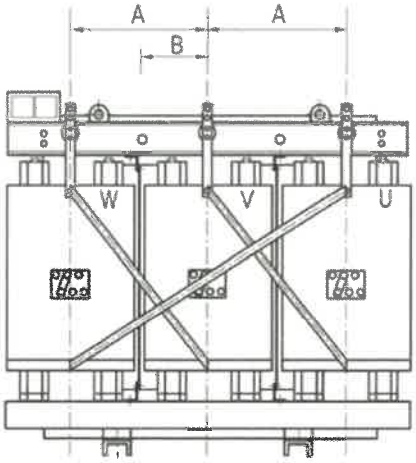

Dimension & Weight

Three phase 22900V-L.V.

Capacity (kVA)	Dimension(mm)			Weight (Kg)
	W	D	H	
100	1200	700	1100	600
200	1300	700	1200	800
300	1400	740	1290	980
400	1450	750	1350	1150
500	1500	750	1400	1400
750	1550	850	1450	1850
1000	1600	850	1550	2400
1500	1700	900	1700	3300
2000	1800	900	1900	4050
2500	1950	900	1950	4600
3000	2200	950	2100	5500
4000	2300	1200	2200	6000
5000	2400	1300	2300	7300
7500	2550	1400	2400	8500
10000	2800	1450	2450	9500

Dry Type Transformers

Ratings

- Frequency : 60Hz, 50Hz
- Capacity : Up to 10MVA
- Primary Voltage : Up to 36KV
- Secondary Voltage : 208Y/120V, 380Y/220V 380Y/440V etc.
- Vector Symbol : Ddo, Dynll etc.

Special Products

- Marine Transformer
- Railroad Vehicle Transformer
- Furnace Type
- Scott Connection
- Explosion Proof Type
- Inverter Transformer of ups

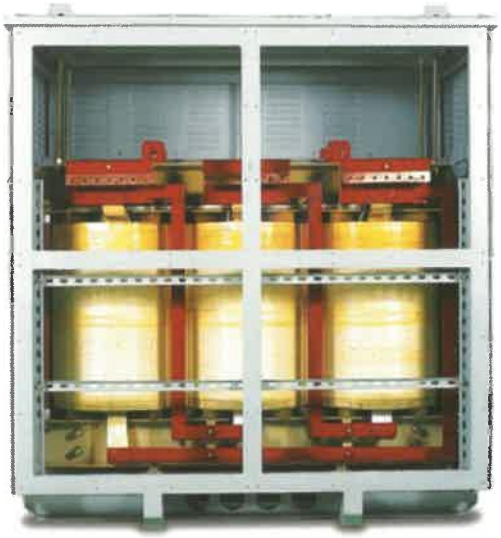

Three phase 6600/3300-L.V

Capacity (kVA)	Characteristics			Dimension(mm)			Totel WT. (kg)
	Efficiency (%)	Vtg. Reg. (%)	Exciting current(%)	W (mm)	D (mm)	H (mm)	
30	96.5	3.0	9.0	550	430	650	200
50	96.5	2.8	8.5	650	450	700	240
75	96.8	2.6	8.0	650	480	800	360
100	97.0	2.5	7.5	750	500	850	430
150	97.2	2.4	7.0	800	530	850	500
200	97.3	2.3	7.0	900	550	900	680
300	97.5	2.2	7.0	1000	600	1100	840
400	97.7	2.1	6.0	1150	650	1250	1160
500	97.9	2.0	6.0	1300	700	1400	1700
750	98.0	1.9	6.0	1350	700	1400	2250
1000	98.2	1.8	5.0	1400	750	1500	2900
1500	98.3	1.7	5.0	1700	800	1850	3500
2000	98.4	1.6	5.0	1850	800	1900	4200
3000	98.6	1.5	4.5	1900	850	1950	5100
4000	98.9	1.2	2.0	2100	1000	2100	6500
5000	99.0	1.1	2.0	2200	1100	2200	7500

Insulation System

ITEM		JEC	ANSI	IEC
Winding Temperature Rise (Resistance method)	A	55	55	60
	E	70	75	75
	B	75	80	80
	F	95	105	100
	H	120	120	125

Maximum Temperature of Insulation(℃)

Classification	JEC	ANSI	IEC
A	105	105	105
E	120	120	120
B	130	130	130
F	155	155	155
H	180	180	180

Dry Type

■ **Fig. 1**

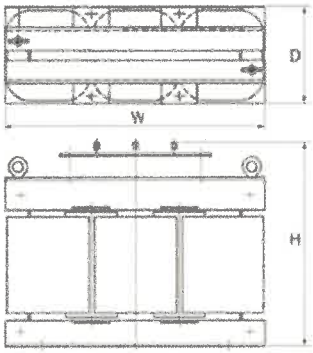

■ **Fig. 2**

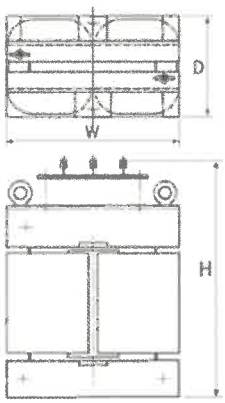

■ **Fig. 3**

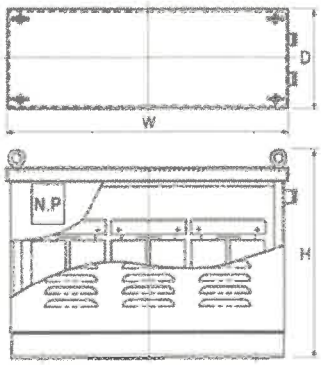

Three phase L.V-L.V

Capacity (kVA)	Characteristics			Dimension(mm)			Totel WT. (kg)	Fig. No.
	Efficiency (%)	Vtg. Reg. (%)	Exciting current(%)	W (mm)	D (mm)	H (mm)		
30	96.5	3.0	9.0	480	380	500	140	
50	96.5	2.8	8.5	580	400	580	200	
75	96.8	2.6	8.0	600	400	650	280	
100	97.0	2.5	7.5	670	450	800	360	
150	97.2	2.4	7.0	670	530	850	440	
200	97.4	2.3	7.0	810	550	950	520	
300	97.6	2.2	7.0	840	600	1000	730	1
400	97.8	2.1	6.0	910	650	1100	950	
500	97.9	2.0	6.0	1100	680	1250	1300	
750	98.0	1.9	6.0	1300	700	1300	1800	
1000	98.2	1.8	5.0	1400	730	1350	2300	
1500	98.3	1.7	5.0	1500	750	1400	2900	
2000	98.4	1.6	5.0	1600	800	1500	3600	

Single phase L.V-L.V

Capacity (kVA)	Characteristics			Dimension(mm)			Totel WT. (kg)	Fig. No.
	Efficiency (%)	Vtg. Reg. (%)	Exciting current(%)	W (mm)	D (mm)	H (mm)		
30	96.5	2.9	8.5	400	350	500	120	
50	96.7	2.8	8.5	500	350	650	180	
75	96.9	2.6	8.0	550	460	760	240	
100	97.1	2.5	7.5	600	480	800	320	
150	97.3	2.4	7.0	700	500	840	400	2
200	97.5	2.3	7.0	750	580	900	480	
300	97.4	2.2	6.5	800	630	1050	650	
500	97.9	2.0	6.0	850	650	1100	1100	
750	98.1	1.9	6.0	900	700	1150	1400	

Marine Transformer Three phase L.V-L.V

Capacity (kVA)	Characteristics			Dimension(mm)			Totel WT. (kg)	Fig. No.
	Efficiency (%)	Vtg. Reg. (%)	Exciting current(%)	W (mm)	D (mm)	H (mm)		
15(5kx3)	96.0	2.5	10.0	960	420	900	190	
30(10kx3)	96.5	2.5	8.0	1140	460	900	300	
45(15kx3)	96.5	2.5	8.0	1140	460	900	300	
60(20kx3)	96.5	2.5	8.0	1140	460	900	350	
75(25kx3)	97.0	2.5	5.0	1250	480	1000	400	
90(30kx3)	97.0	2.5	5.0	1250	480	1000	550	3
120(40kx3)	97.0	2.5	5.0	1250	480	1000	650	
135(45kx3)	97.0	2.5	5.0	1400	520	1100	750	
150(50kx3)	97.0	2.5	5.0	1400	520	1100	900	
180(60kx3)	97.5	2.5	5.0	1710	610	1200	1050	
270(90kx3)	98.0	2.5	5.0	2000	710	1200	1300	
300(100kx3)	98.0	2.5	5.0	2000	710	1200	1400	

Reactors

Production Range and Specification:

• Motor Starting Reactors

The Induction Motor needs a huge starting current. If starting current affects the power source of any other loads, starting current must be regulated reduced voltage starting method. In the reduced voltage starting methods, there are REACTOR starting method and AUTO-TRANSFORMER (kondorfer) starting method.

Specification

- number of Phase : 3Phase
- Rated Frequency : 60Hz or 50Hz
- Rated Voltage: 3300 / 6600, 440/ 220V
- Rated Capacity : 22 ~ 7500kW
- Cooling Method: Dry Type or Mold Type
- Tap: 50%, 65%, 80% (Standard Tap)
- Rating Time : 1min, 3min, 5min
- Insulation Level : B, F, H Class

• Condenser Series Reactors

The Series Reactors, that are inserted in the capacitors or capacitor banks, are intended to reduce a distortion of waveform and to protect the contactors of a circuit breaker or switch by suppressing the inrush current at the time of closing the capacitors or capacitor banks.

Specification

- number of Phase : 3Phase
- Rated Frequency : 60Hz or 50Hz
- Rated Voltage : 3300 / 6600, 440/ 220V
- Rated Capacity: up to 1000 kVA
- Cooling Method: Dry Type or Mold Type
- Insulation Level : B, F, H Class

- Inverter Reactors / DC Reactors

- Special Purpose Reactors (AC,DC)

Quality Assurance

Quality Policy

The quality assurance of SANIL is guaranteed to provide top-class products to customers through the on-going R & D for improvement and certified quality system.

Quality Goal

Inspection & Test

	Inspection & Test Item	Test Type		
		Routine	Type	Special
1	Construction & Dimension Check	o		
2	Winding Resistance Measurement	o		
3	Ratio Check	o		
4	Phase Relation Check	o		
5	Insulation Resistance Measurement	o		
6	No-Load Loss & Current Measurement	o		
7	Impedance Voltage & Load Loss Measurement	o		
8	Temperature Rise Test		o	
9	Impulse Voltage Test		o	
10	Separate source Voltage Withstand Test	o		
11	Induced Voltage Withstand Test	o		
12	Sound Level Measurement			o
13	Calculation of Efficiency & Voltage Regulation	o		

Pressure Relief Device

1

Pressure Relief Device

2

Oil Lever Indicator

3

Oil Lever Indicator

4

Dehydreting Breather

5

Dehydreting Breather

6

Winding Temp. Indicator

7

Oil Temp. Indicator

8

Oil Drain Valve

9

Sampling Valve

10

Buchhoiz Relay

11

Pressure Relief Device

12

Low Voltage Bushing

13

High Voltage Bushing

14

Sudden Pressure Relay

15

Cooling Fan

16

No-Voltage Tap Changer

17

On Load TAP Changer

18

Radiator Valve

19

Radiator

20


SOKEN

Your best partner

Enertech Co., Ltd.

1506, Dunchon-daero 545, Jungwon-gu, Seongnam-city, Kyeong-do, Korea

Tel. +82-31-717-8584 Fax. +82-31-734-7633

E-mail : sales@enerkeeper.com

Website : www.enerkeeper.com